Analog Multiplexers/ Demultiplexers

High−Performance Silicon−Gate CMOS

MC74HC4051A, MC74HC4052A, MC74HC4053A

The MC74HC4051A, MC74HC4052A and MC74HC4053A utilize silicon−gate CMOS technology to achieve fast propagation delays, low ON resistances, and low OFF leakage currents. These analog multiplexers/demultiplexers control analog voltages that may vary across the complete power supply range (from V_{CC} to V_{EE}).

The HC4051A, HC4052A and HC4053A are identical in pinout to the metal−gate MC14051AB, MC14052AB and MC14053AB. The Channel−Select inputs determine which one of the Analog Inputs/Outputs is to be connected, by means of an analog switch, to the Common Output/Input. When the Enable pin is HIGH, all analog switches are turned off.

The Channel−Select and Enable inputs are compatible with standard CMOS outputs; with pullup resistors they are compatible with LSTTL outputs.

These devices have been designed so that the ON resistance (R_{on}) is more linear over input voltage than R_{on} of metal−gate CMOS analog switches.

For a multiplexer/demultiplexer with injection current protection, see HC4851A and HC4852A.

Features

- Fast Switching and Propagation Speeds
- Low Crosstalk Between Switches
- Diode Protection on All Inputs/Outputs
- Analog Power Supply Range ($V_{CC} - V_{EE}$) = 2.0 to 12.0 V
- Digital (Control) Power Supply Range (V_{CC} − GND) = 2.0 to 6.0 V
- Improved Linearity and Lower ON Resistance Than Metal−Gate Counterparts
- Low Noise
- In Compliance with the Requirements of JEDEC Standard No. 7A
- Chip Complexity: HC4051A − 184 FETs or 46 Equivalent Gates
  HC4052A − 168 FETs or 42 Equivalent Gates
  HC4053A − 156 FETs or 39 Equivalent Gates
- NLV Prefix for Automotive and Other Applications Requiring Unique Site and Control Change Requirements; AEC−Q100 Qualified and PPAP Capable
- These Devices are Pb−Free, Halogen Free/BFR−Free and are RoHS Compliant

This document contains information on some products that are still under development. ON Semiconductor reserves the right to change or discontinue these products without notice.

ON Semiconductor®

www.onsemi.com

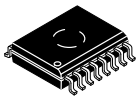

SOIC−16 WIDE
DW SUFFIX
CASE 751G

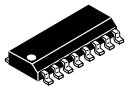

SOIC−16
D SUFFIX
CASE 751B

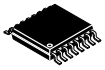

TSSOP−16
DT SUFFIX
CASE 948F



QFN16
MN SUFFIX
CASE 485AW

MARKING DIAGRAMS

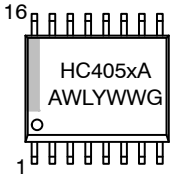

SOIC−16 WIDE

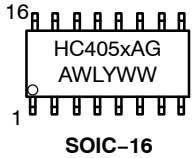

SOIC−16

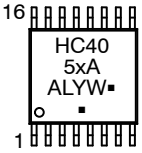

TSSOP−16

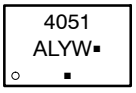

QFN16

x	= 1, 2 or 3
A	= Assembly Location
WL, L	= Wafer Lot
YY, Y	= Year
WW, W	= Work Week
G or ▪	= Pb−Free Package

(Note: Microdot may be in either location)

ORDERING INFORMATION

See detailed ordering and shipping information on page 13 of this data sheet.

© Semiconductor Components Industries, LLC, 2017

LOGIC DIAGRAM
MC74HC4051A
Single−Pole, 8−Position Plus Common Off

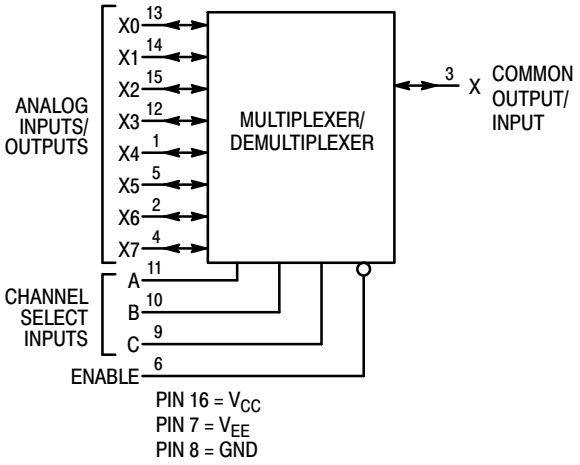

FUNCTION TABLE − MC74HC4051A

Control Inputs				
	Select			
Enable	C	B	A	ON Channels
L	L	L	L	X0
L	L	L	H	X1
L	L	H	L	X2
L	L	H	H	X3
L	H	L	L	X4
L	H	L	H	X5
L	H	H	L	X6
L	H	H	H	X7
H	X	X	X	NONE

X = Don't Care

Pinout: MC74HC4051A (Top View)

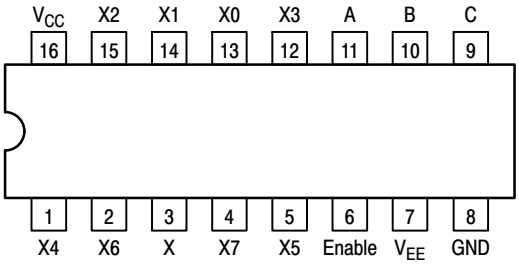

LOGIC DIAGRAM
MC74HC4052A
Double−Pole, 4−Position Plus Common Off

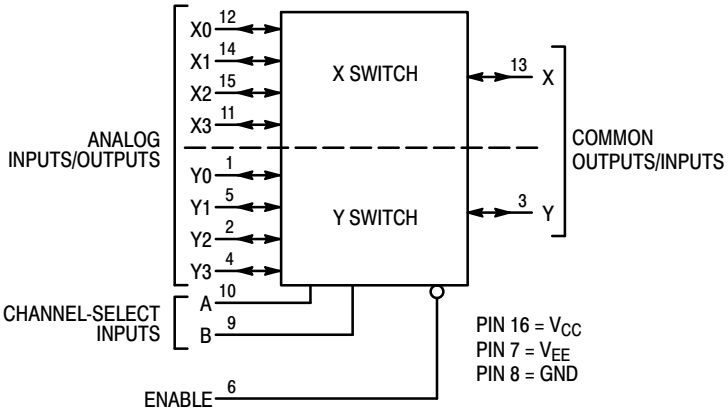

FUNCTION TABLE − MC74HC4052A

Control Inputs			
	Select		
Enable	B	A	ON Channels
L	L	L	Y0 X0
L	L	H	Y1 X1
L	H	L	Y2 X2
L	H	H	Y3 X3
H	X	X	NONE

X = Don't Care

Pinout: MC74HC4052A (Top View)

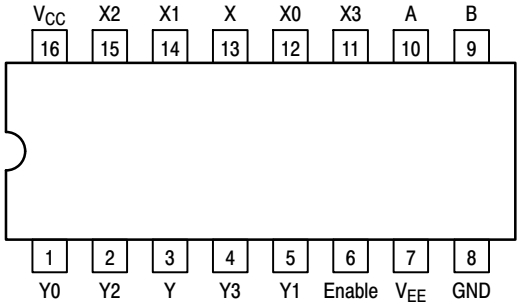

LOGIC DIAGRAM
MC74HC4053A
Triple Single−Pole, Double−Position Plus Common Off

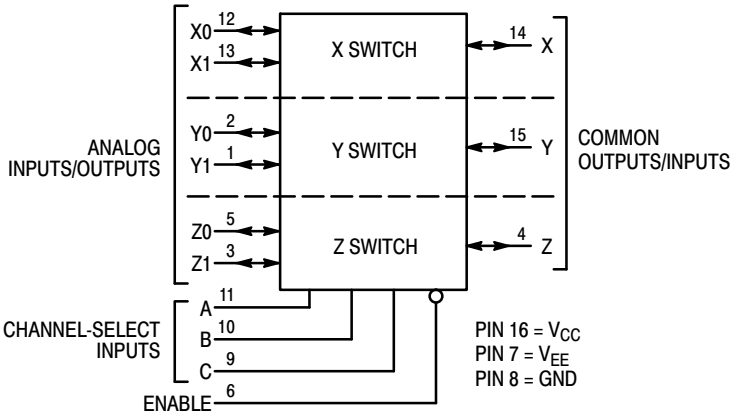

NOTE: This device allows independent control of each switch. Channel−Select Input A controls the X−Switch, Input B controls the Y−Switch and Input C controls the Z−Switch

FUNCTION TABLE − MC74HC4053A

Control Inputs						
	Select			ON Channels		
Enable	C	B	A			
L	L	L	L	Z0	Y0	X0
L	L	L	H	Z0	Y0	X1
L	L	H	L	Z0	Y1	X0
L	L	H	H	Z0	Y1	X1
L	H	L	L	Z1	Y0	X0
L	H	L	H	Z1	Y0	X1
L	H	H	L	Z1	Y1	X0
L	H	H	H	Z1	Y1	X1
H	X	X	X	NONE		

X = Don't Care

Pinout: MC74HC4053A (Top View)

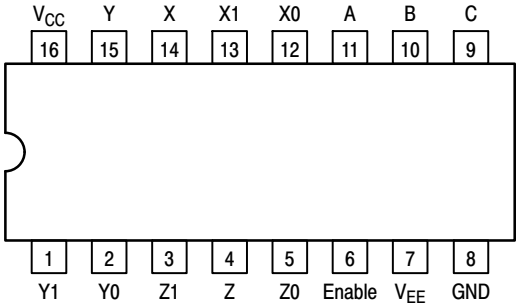

MAXIMUM RATINGS

Symbol	Parameter	Value	Unit
V_{CC}	Positive DC Supply Voltage (Referenced to GND) (Referenced to V_{EE})	−0.5 to +7.0 −0.5 to +14.0	V
V_{EE}	Negative DC Supply Voltage (Referenced to GND)	−7.0 to +5.0	V
V_{IS}	Analog Input Voltage	V_{EE} − 0.5 to V_{CC} + 0.5	V
V_{in}	Digital Input Voltage (Referenced to GND)	−0.5 to V_{CC} + 0.5	V
I	DC Current, Into or Out of Any Pin	±25	mA
P_D	Power Dissipation in Still Air, SOIC Package† TSSOP Package†	500 450	mW
T_{stg}	Storage Temperature Range	−65 to +150	°C
T_L	Lead Temperature, 1 mm from Case for 10 Seconds SOIC or TSSOP Package	 260	°C

Stresses exceeding those listed in the Maximum Ratings table may damage the device. If any of these limits are exceeded, device functionality should not be assumed, damage may occur and reliability may be affected.
†Derating: SOIC Package: −7 mW/°C from 65° to 125°C
TSSOP Package: −6.1 mW/°C from 65° to 125°C

This device contains protection circuitry to guard against damage due to high static voltages or electric fields. However, precautions must be taken to avoid applications of any voltage higher than maximum rated voltages to this high−impedance circuit. For proper operation, V_{in} and V_{out} should be constrained to the range GND ≤ (V_{in} or V_{out}) ≤ V_{CC}.
Unused inputs must always be tied to an appropriate logic voltage level (e.g., either GND or V_{CC}). Unused outputs must be left open.

RECOMMENDED OPERATING CONDITIONS

Symbol	Parameter		Min	Max	Unit
V_{CC}	Positive DC Supply Voltage	(Referenced to GND) (Referenced to V_{EE})	2.0 2.0	6.0 12.0	V
V_{EE}	Negative DC Supply Voltage, Output (Referenced to GND)		−6.0	GND	V
V_{IS}	Analog Input Voltage		V_{EE}	V_{CC}	V
V_{in}	Digital Input Voltage (Referenced to GND)		GND	V_{CC}	V
V_{IO}*	Static or Dynamic Voltage Across Switch			1.2	V
T_A	Operating Temperature Range, All Package Types		−55	+125	°C
t_r, t_f	Input Rise/Fall Time (Channel Select or Enable Inputs)	V_{CC} = 2.0 V V_{CC} = 3.0 V V_{CC} = 4.5 V V_{CC} = 6.0 V	0 0 0 0	1000 600 500 400	ns

Functional operation above the stresses listed in the Recommended Operating Ranges is not implied. Extended exposure to stresses beyond the Recommended Operating Ranges limits may affect device reliability.

*For voltage drops across switch greater than 1.2 V (switch on), excessive V_{CC} current may be drawn; i.e., the current out of the switch may contain both V_{CC} and switch input components. The reliability of the device will be unaffected unless the Maximum Ratings are exceeded.

DC CHARACTERISTICS — Digital Section (Voltages Referenced to GND) V_{EE} = GND, Except Where Noted

Symbol	Parameter	Condition	V_{CC} V	Guaranteed Limit			Unit
				−55 to 25°C	≤85°C	≤125°C	
V_{IH}	Minimum High−Level Input Voltage, Channel−Select or Enable Inputs	R_{on} = Per Spec	2.0 3.0 4.5 6.0	1.50 2.10 3.15 4.20	1.50 2.10 3.15 4.20	1.50 2.10 3.15 4.20	V
V_{IL}	Maximum Low−Level Input Voltage, Channel−Select or Enable Inputs	R_{on} = Per Spec	2.0 3.0 4.5 6.0	0.5 0.9 1.35 1.8	0.5 0.9 1.35 1.8	0.5 0.9 1.35 1.8	V
I_{in}	Maximum Input Leakage Current, Channel−Select or Enable Inputs	V_{in} = V_{CC} or GND, V_{EE} = − 6.0 V	6.0	± 0.1	± 1.0	± 1.0	μA
I_{CC}	Maximum Quiescent Supply Current (per Package)	Channel Select, Enable and V_{IS} = V_{CC} or GND; V_{EE} = GND V_{IO} = 0 V V_{EE} = − 6.0	6.0 6.0	1 4	10 40	20 80	μA

DC CHARACTERISTICS — Analog Section

Symbol	Parameter	Condition	V_{CC}	V_{EE}	Guaranteed Limit			Unit
					–55 to 25°C	≤85°C	≤125°C	
R_{on}	Maximum “ON” Resistance	V_{in} = V_{IL} or V_{IH}; V_{IS} = V_{CC} to V_{EE}; $I_S \le 2.0$ mA (Figures 1, 2)	4.5 4.5 6.0	0.0 – 4.5 – 6.0	190 120 100	240 150 125	280 170 140	Ω
		V_{in} = V_{IL} or V_{IH}; V_{IS} = V_{CC} or V_{EE} (Endpoints); $I_S \le 2.0$ mA (Figures 1, 2)	4.5 4.5 6.0	0.0 – 4.5 – 6.0	150 100 80	190 125 100	230 140 115	
ΔR_{on}	Maximum Difference in “ON” Resistance Between Any Two Channels in the Same Package	V_{in} = V_{IL} or V_{IH}; V_{IS} = 1/2 (V_{CC} – V_{EE}); $I_S \le 2.0$ mA	4.5 4.5 6.0	0.0 – 4.5 – 6.0	30 12 10	35 15 12	40 18 14	Ω
I_{off}	Maximum Off–Channel Leakage Current, Any One Channel	V_{in} = V_{IL} or V_{IH}; V_{IO} = V_{CC} – V_{EE}; Switch Off (Figure 3)	6.0	– 6.0	0.1	0.5	1.0	μA
	Maximum Off–Channel Leakage Current, Common Channel HC4051A HC4052A HC4053A	V_{in} = V_{IL} or V_{IH}; V_{IO} = V_{CC} – V_{EE}; Switch Off (Figure 4)	6.0 6.0 6.0	– 6.0 – 6.0 – 6.0	0.2 0.1 0.1	2.0 1.0 1.0	4.0 2.0 2.0	
I_{on}	Maximum On–Channel Leakage Current, Channel–to–Channel HC4051A HC4052A HC4053A	V_{in} = V_{IL} or V_{IH}; Switch–to–Switch = V_{CC} – V_{EE}; (Figure 5)	6.0 6.0 6.0	– 6.0 – 6.0 – 6.0	0.2 0.1 0.1	2.0 1.0 1.0	4.0 2.0 2.0	μA

AC CHARACTERISTICS (C_L = 50 pF, Input t_r = t_f = 6 ns)

Symbol	Parameter	V_{CC} V	Guaranteed Limit			Unit
			–55 to 25°C	≤85°C	≤125°C	
t_{PLH}, t_{PHL}	Maximum Propagation Delay, Channel–Select to Analog Output (Figure 9)	2.0 3.0 4.5 6.0	270 90 59 45	320 110 79 65	350 125 85 75	ns
t_{PLH}, t_{PHL}	Maximum Propagation Delay, Analog Input to Analog Output (Figure 10)	2.0 3.0 4.5 6.0	40 25 12 10	60 30 15 13	70 32 18 15	ns
t_{PLZ}, t_{PHZ}	Maximum Propagation Delay, Enable to Analog Output (Figure 11)	2.0 3.0 4.5 6.0	160 70 48 39	200 95 63 55	220 110 76 63	ns
t_{PZL}, t_{PZH}	Maximum Propagation Delay, Enable to Analog Output (Figure 11)	2.0 3.0 4.5 6.0	245 115 49 39	315 145 69 58	345 155 83 67	ns
C_{in}	Maximum Input Capacitance, Channel–Select or Enable Inputs		10	10	10	pF
$C_{I/O}$	Maximum Capacitance — Analog I/O		35	35	35	pF
	(All Switches Off) — Common O/I: HC4051A HC4052A HC4053A		130 80 50	130 80 50	130 80 50	
	Feed–through		1.0	1.0	1.0	
C_{PD}	Power Dissipation Capacitance (Figure 13)* HC4051A HC4052A HC4053A	Typical @ 25°C, V_{CC} = 5.0 V, V_{EE} = 0 V 45 80 45				pF

* Used to determine the no–load dynamic power consumption: $P_D = C_{PD} V_{CC}^2 f + I_{CC} V_{CC}$.

ADDITIONAL APPLICATION CHARACTERISTICS (GND = 0 V)

Symbol	Parameter	Condition	V_{CC} V	V_{EE} V	Limit* 25°C '51	Limit* 25°C '52	Limit* 25°C '53	Unit
BW	Maximum On−Channel Bandwidth or Minimum Frequency Response (Figure 6)	f_{in} = 1MHz Sine Wave; Adjust f_{in} Voltage to Obtain 0dBm at V_{OS}; Increase f_{in} Frequency Until dB Meter Reads −3dB; R_L = 50Ω, C_L = 10pF	2.25 4.50 6.00	−2.25 −4.50 −6.00	80 80 80	95 95 95	120 120 120	MHz
–	Off−Channel Feed−through Isolation (Figure 7)	f_{in} = Sine Wave; Adjust f_{in} Voltage to Obtain 0dBm at V_{IS} f_{in} = 10kHz, R_L = 600Ω, C_L = 50pF	2.25 4.50 6.00	−2.25 −4.50 −6.00	−50 −50 −50			dB
		f_{in} = 1.0MHz, R_L = 50Ω, C_L = 10pF	2.25 4.50 6.00	−2.25 −4.50 −6.00	−40 −40 −40			
–	Feedthrough Noise. Channel−Select Input to Common I/O (Figure 8)	V_{in} ≤ 1MHz Square Wave (t_r = t_f = 6ns); Adjust R_L at Setup so that I_S = 0A; Enable = GND R_L = 600Ω, C_L = 50pF	2.25 4.50 6.00	−2.25 −4.50 −6.00	25 105 135			mV_{PP}
		R_L = 10kΩ, C_L = 10pF	2.25 4.50 6.00	−2.25 −4.50 −6.00	35 145 190			
–	Crosstalk Between Any Two Switches (Figure 12) (Test does not apply to HC4051A)	f_{in} = Sine Wave; Adjust f_{in} Voltage to Obtain 0dBm at V_{IS} f_{in} = 10kHz, R_L = 600Ω, C_L = 50pF	2.25 4.50 6.00	−2.25 −4.50 −6.00	−50 −50 −50			dB
		f_{in} = 1.0MHz, R_L = 50Ω, C_L = 10pF	2.25 4.50 6.00	−2.25 −4.50 −6.00	−60 −60 −60			
THD	Total Harmonic Distortion (Figure 14)	f_{in} = 1kHz, R_L = 10kΩ, C_L = 50pF THD = $THD_{measured}$ − THD_{source} V_{IS} = 4.0V_{PP} sine wave V_{IS} = 8.0V_{PP} sine wave V_{IS} = 11.0V_{PP} sine wave	2.25 4.50 6.00	−2.25 −4.50 −6.00	0.10 0.08 0.05			%

*Limits not tested. Determined by design and verified by qualification.

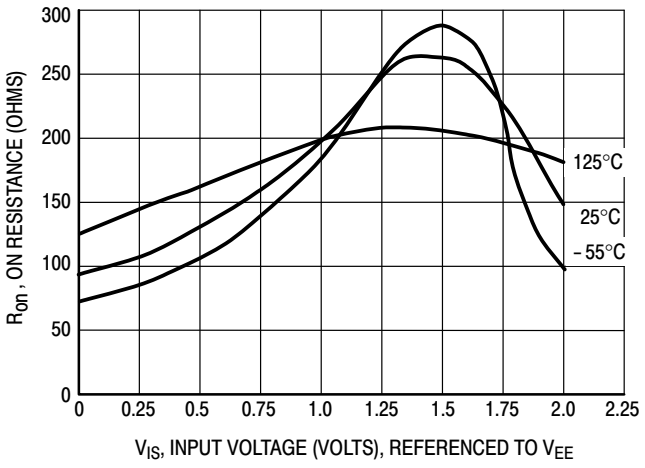

Figure 1a. Typical On Resistance, V_{CC} − V_{EE} = 2.0 V

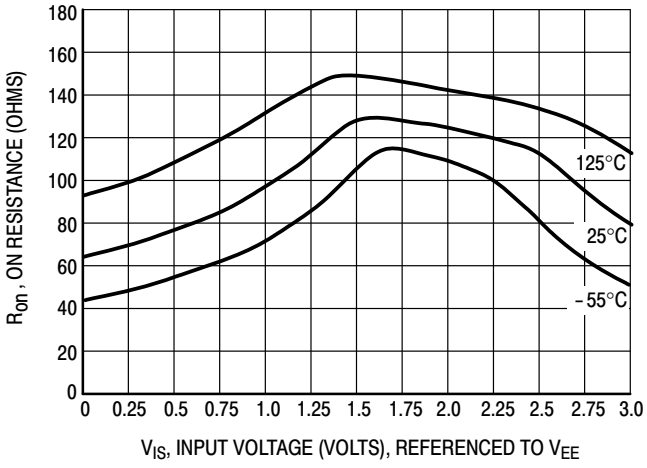

Figure 1b. Typical On Resistance, V_{CC} − V_{EE} = 3.0 V

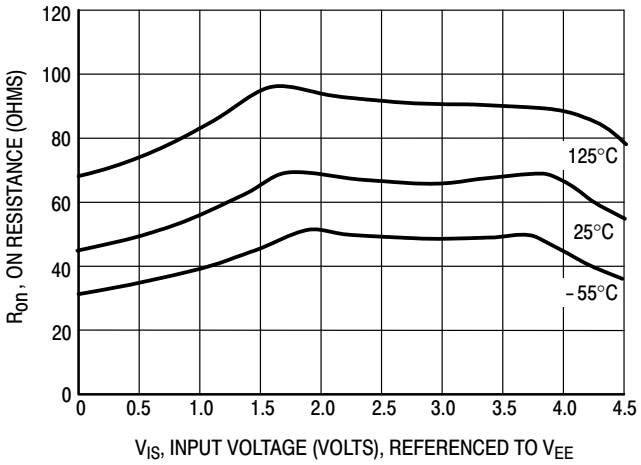

Figure 1c. Typical On Resistance, $V_{CC} - V_{EE}$ = 4.5 V

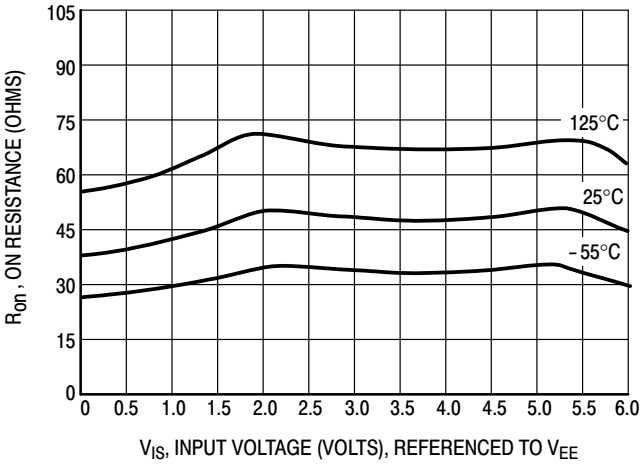

Figure 1d. Typical On Resistance, $V_{CC} - V_{EE}$ = 6.0 V

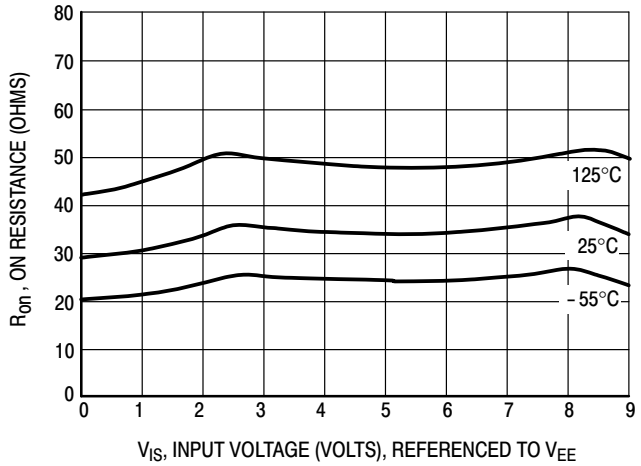

Figure 1e. Typical On Resistance, $V_{CC} - V_{EE}$ = 9.0 V

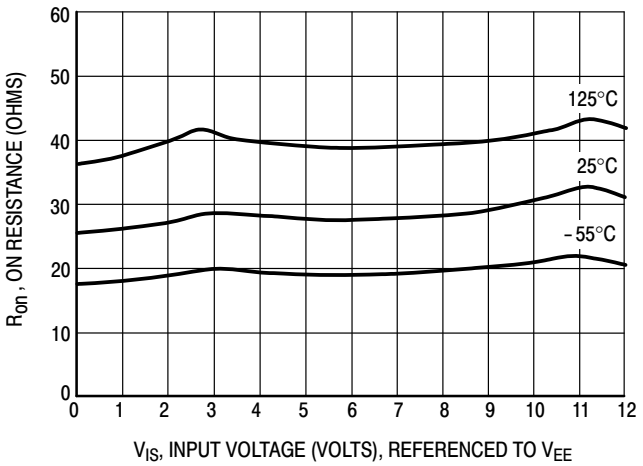

Figure 1f. Typical On Resistance, $V_{CC} - V_{EE}$ = 12.0 V

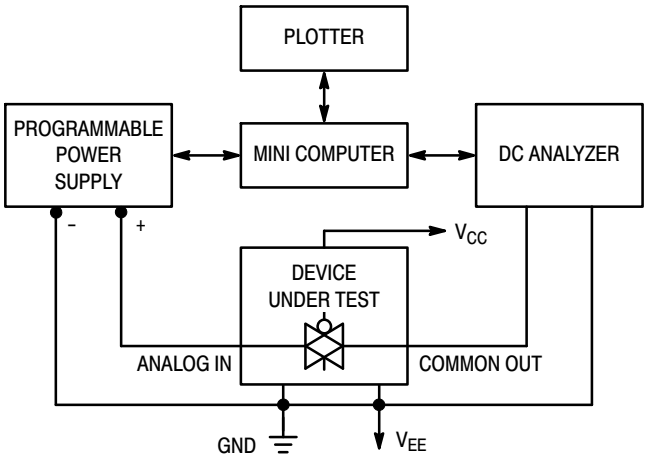

Figure 2. On Resistance Test Set−Up

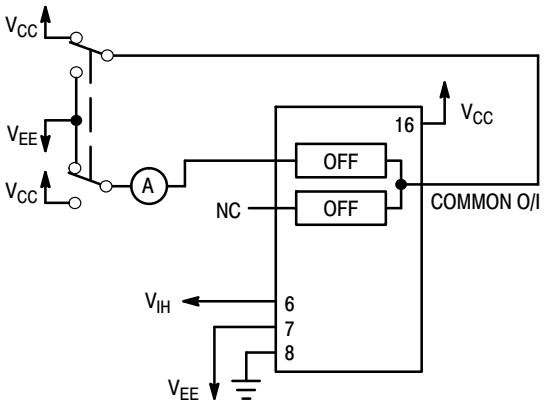

Figure 3. Maximum Off Channel Leakage Current, Any One Channel, Test Set−Up

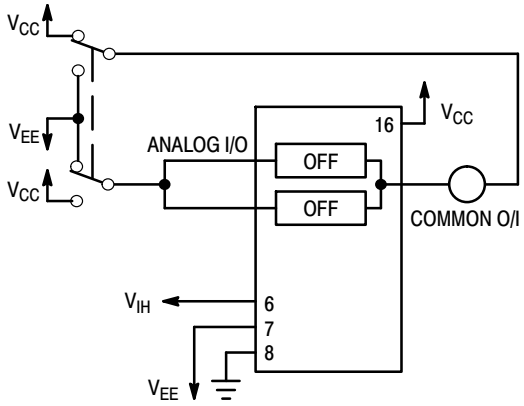

Figure 4. Maximum Off Channel Leakage Current, Common Channel, Test Set−Up

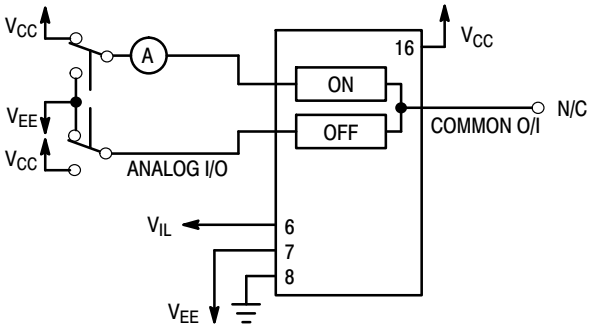

Figure 5. Maximum On Channel Leakage Current, Channel to Channel, Test Set−Up

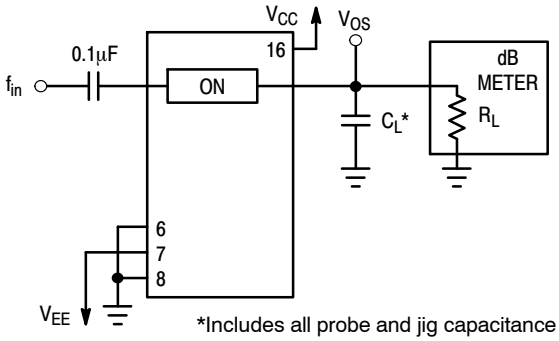

Figure 6. Maximum On Channel Bandwidth, Test Set−Up

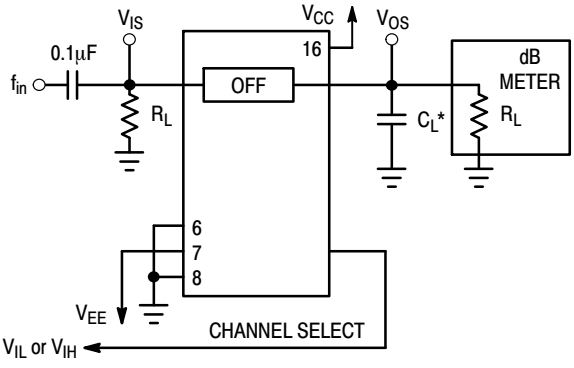

Figure 7. Off Channel Feedthrough Isolation, Test Set−Up

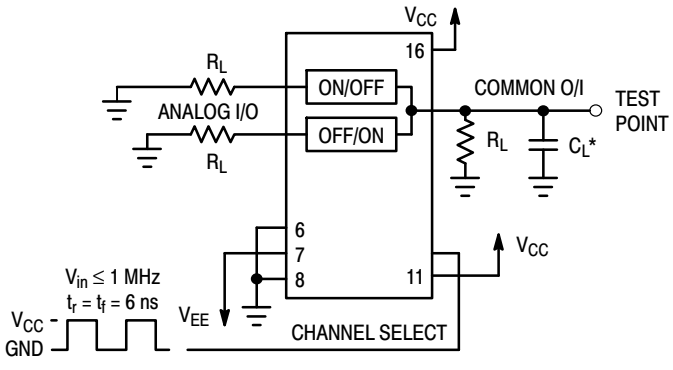

Figure 8. Feedthrough Noise, Channel Select to Common Out, Test Set−Up

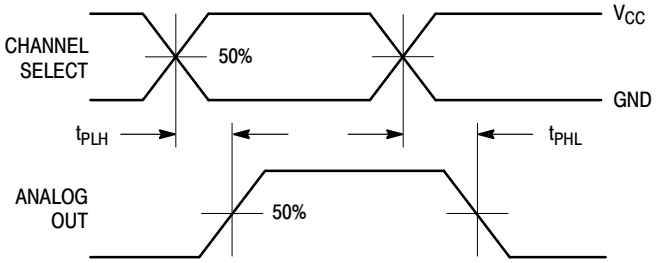

Figure 9a. Propagation Delays, Channel Select to Analog Out

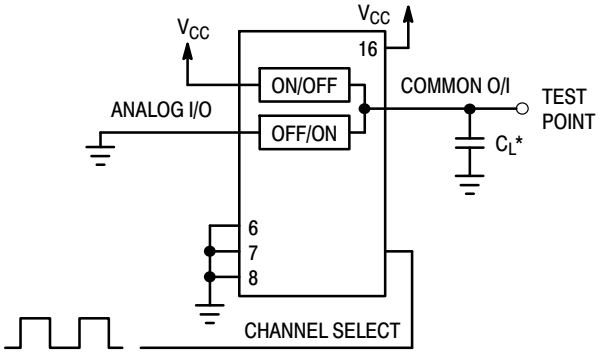

*Includes all probe and jig capacitance

Figure 9b. Propagation Delay, Test Set−Up Channel Select to Analog Out

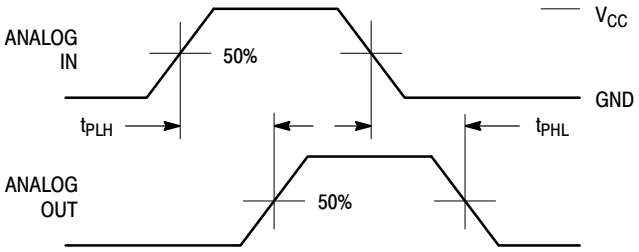

Figure 10a. Propagation Delays, Analog In to Analog Out

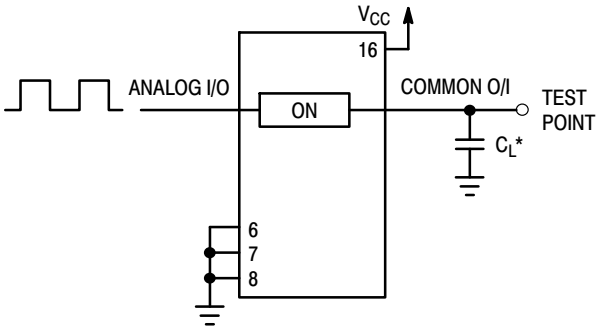

*Includes all probe and jig capacitance

Figure 10b. Propagation Delay, Test Set−Up Analog In to Analog Out

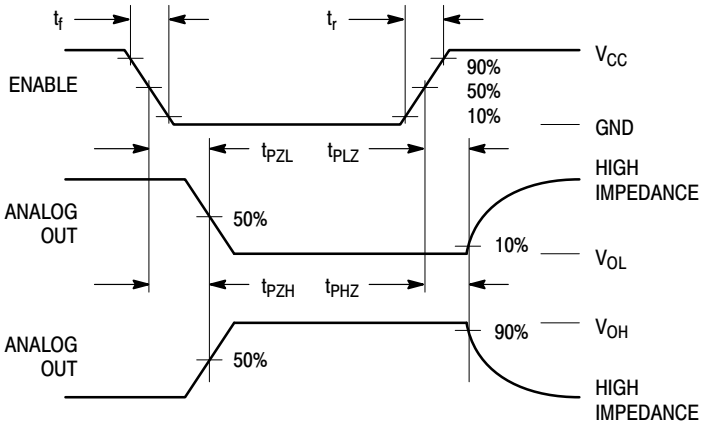

Figure 11a. Propagation Delays, Enable to Analog Out

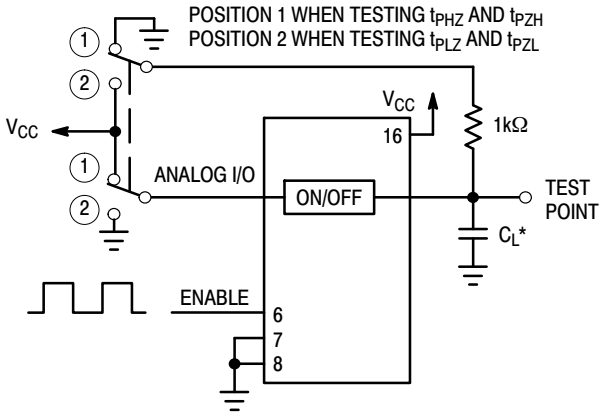

Figure 11b. Propagation Delay, Test Set−Up Enable to Analog Out

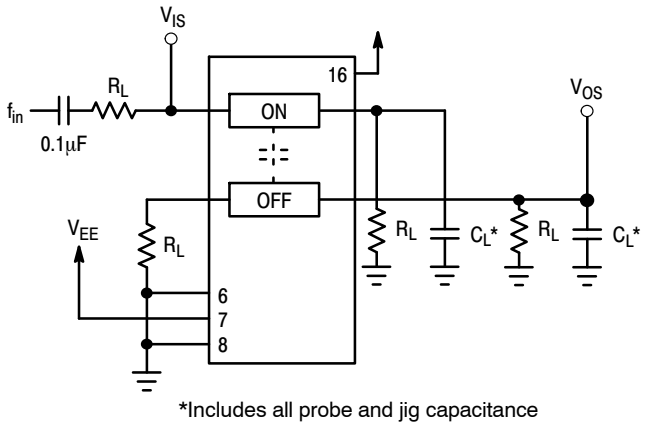

Figure 12. Crosstalk Between Any Two Switches, Test Set−Up

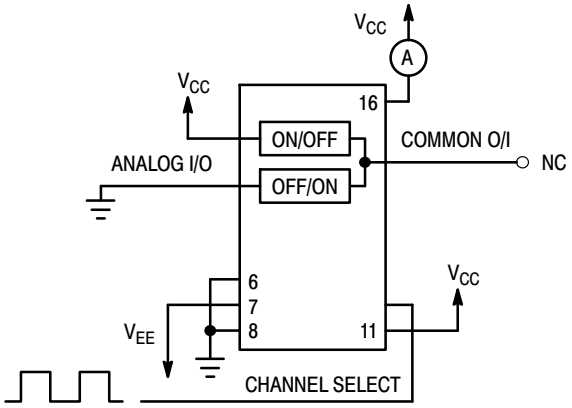

Figure 13. Power Dissipation Capacitance, Test Set−Up

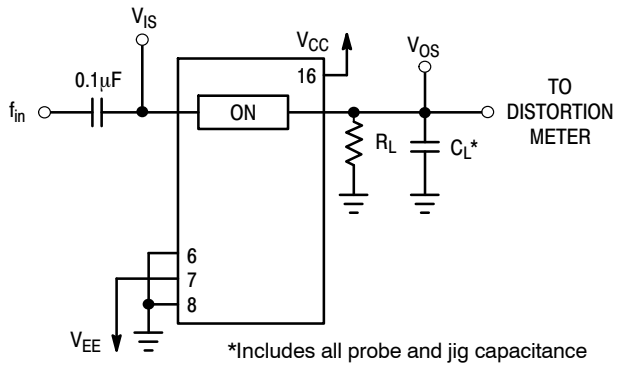

Figure 14a. Total Harmonic Distortion, Test Set−Up

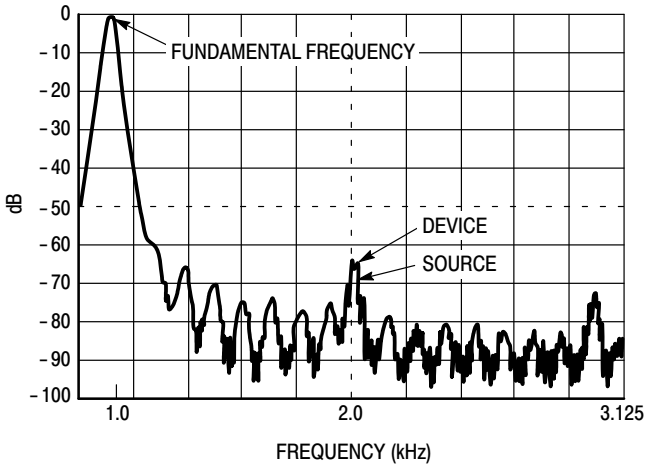

Figure 14b. Plot, Harmonic Distortion

APPLICATIONS INFORMATION

The Channel Select and Enable control pins should be at V_{CC} or GND logic levels. V_{CC} being recognized as a logic high and GND being recognized as a logic low. In this example:

V_{CC} = +5V = logic high
GND = 0V = logic low

The maximum analog voltage swings are determined by the supply voltages V_{CC} and V_{EE}. The positive peak analog voltage should not exceed V_{CC}. Similarly, the negative peak analog voltage should not go below V_{EE}. In this example, the difference between V_{CC} and V_{EE} is ten volts. Therefore, using the configuration of Figure 15, a maximum analog signal of ten volts peak−to−peak can be controlled. Unused analog inputs/outputs may be left floating (i.e., not connected). However, tying unused analog inputs and outputs to V_{CC} or GND through a low value resistor helps minimize crosstalk and feed−through noise that may be picked up by an unused switch.

Although used here, balanced supplies are not a requirement. The only constraints on the power supplies are that:

V_{CC} − GND = 2 to 6 volts
V_{EE} − GND = 0 to −6 volts
V_{CC} − V_{EE} = 2 to 12 volts
and $V_{EE} \leq$ GND

When voltage transients above V_{CC} and/or below V_{EE} are anticipated on the analog channels, external Germanium or Schottky diodes (D_x) are recommended as shown in Figure 16. These diodes should be able to absorb the maximum anticipated current surges during clipping.

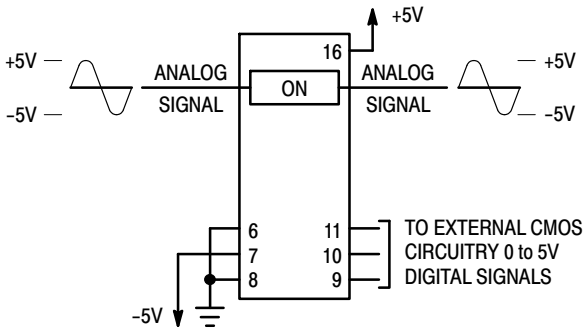

Figure 15. Application Example

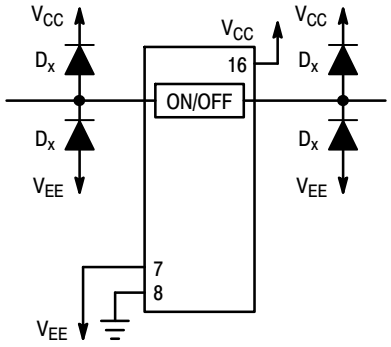

Figure 16. External Germanium or Schottky Clipping Diodes

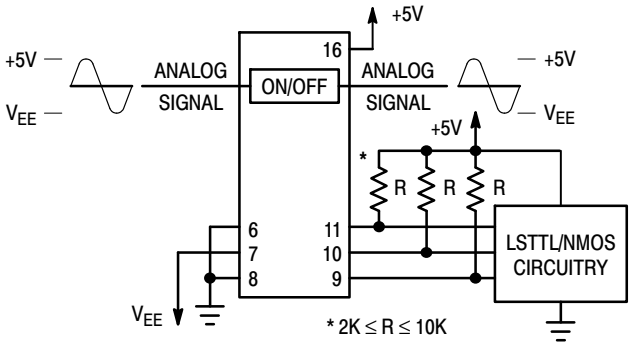

a. Using Pull−Up Resistors

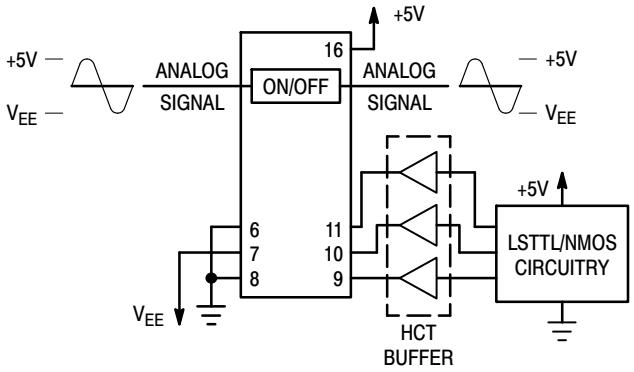

b. Using HCT Interface

Figure 17. Interfacing LSTTL/NMOS to CMOS Inputs

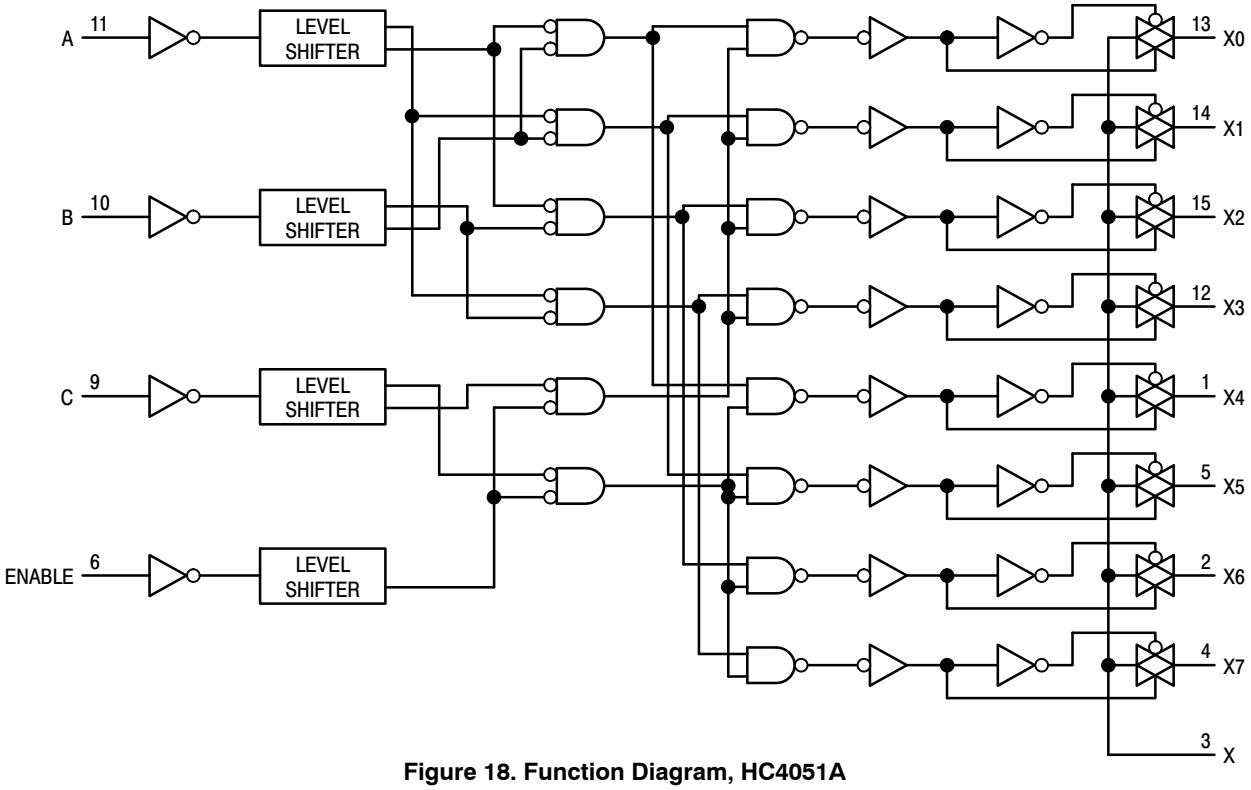

Figure 18. Function Diagram, HC4051A

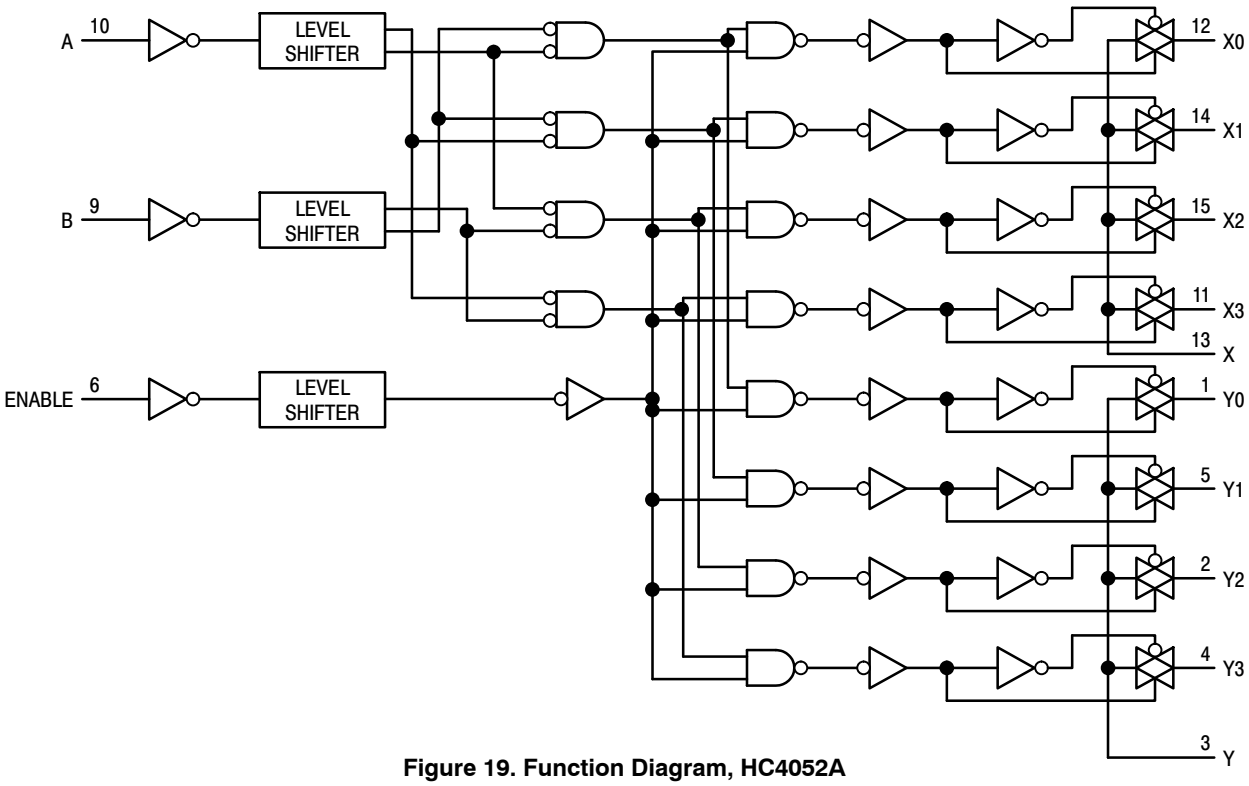

Figure 19. Function Diagram, HC4052A

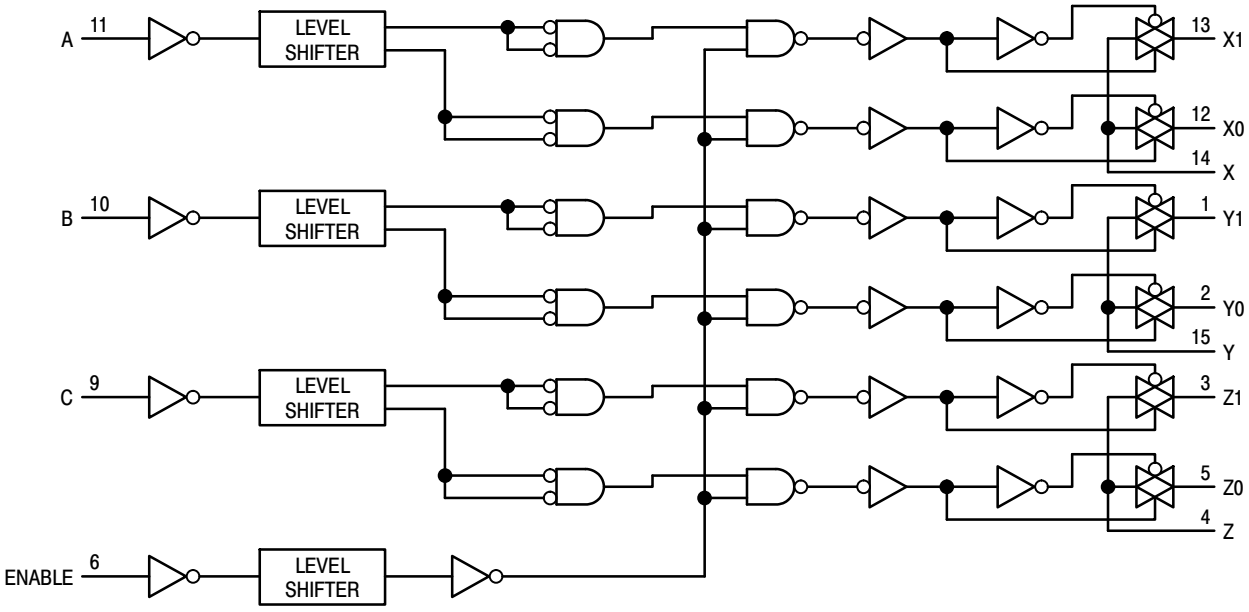

Figure 20. Function Diagram, HC4053A

ORDERING INFORMATION

Device	Package	Shipping†
MC74HC4051ADG	SOIC−16 (Pb−Free)	48 Units / Rail
MC74HC4051ADR2G		2500 Units / Tape & Reel
NLV74HC4051ADR2G*		2500 Units / Tape & Reel
MC74HC4051AADR2G		2500 Units / Tape & Reel
NLV74HC4051AADR2G*		2500 Units / Tape & Reel
MC74HC4051ADWG	SOIC−16 WIDE (Pb−Free)	48 Units / Rail
MC74HC4051ADWR2G		1000 Units / Tape & Reel
NLVHC4051ADWR2G*		1000 Units / Tape & Reel
MC74HC4051ADTG	TSSOP−16 (Pb−Free)	96 Units / Rail
MC74HC4051ADTR2G		2500 Units / Tape & Reel
NLVHC4051ADTR2G*		2500 Units / Tape & Reel
NLVHC4051AADTR2G*		2500 Units / Tape & Reel
NLVHC4051AMNTWG* (In Development)	QFN16 (Pb−Free)	3000 Units / Tape & Reel
MC74HC4052ADG	SOIC−16 (Pb−Free)	48 Units / Rail
MC74HC4052ADR2G		2500 Units / Tape & Reel
NLV74HC4052ADR2G*		2500 Units / Tape & Reel
MC74HC4052ADWG	SOIC−16 WIDE (Pb−Free)	48 Units / Rail
MC74HC4052ADWR2G		1000 Units / Tape & Reel
MC74HC4052ADTG	TSSOP−16 (Pb−Free)	96 Units / Rail
MC74HC4052ADTR2G		2500 Units / Tape & Reel
NLV74HC4052ADTRG*		2500 Units / Tape & Reel
NLVHC4052ADTR2G*		2500 Units / Tape & Reel
NLVHC4052AMNTWG* (In Development)	QFN16 (Pb−Free)	3000 Units / Tape & Reel
MC74HC4053ADG	SOIC−16 (Pb−Free)	48 Units / Rail
MC74HC4053ADR2G		2500 Units / Tape & Reel
NLV74HC4053ADR2G*		2500 Units / Tape & Reel
MC74HC4053ADWG	SOIC−16 WIDE (Pb−Free)	48 Units / Rail
NLV74HC4053ADWRG*		1000 Units / Tape & Reel
MC74HC4053ADWR2G		1000 Units / Tape & Reel
NLV74HC4053ADWR2G*		1000 Units / Tape & Reel
MC74HC4053ADTG	TSSOP−16 (Pb−Free)	96 Units / Rail
MC74HC4053ADTR2G		2500 Units / Tape & Reel
NLVHC4053ADTR2G*		2500 Units / Tape & Reel

†For information on tape and reel specifications, including part orientation and tape sizes, please refer to our Tape and Reel Packaging Specifications Brochure, BRD8011/D.

*NLV Prefix for Automotive and Other Applications Requiring Unique Site and Control Change Requirements; AEC−Q100 Qualified and PPAP Capable.

MECHANICAL CASE OUTLINE
PACKAGE DIMENSIONS

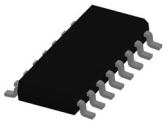

SOIC−16 9.90x3.90x1.50 1.27P
CASE 751B
ISSUE L

DATE 29 MAY 2024

NOTES:
1. DIMENSIONING AND TOLERANCING PER ASME Y14.5M, 2018.
2. DIMENSION IN MILLIMETERS. ANGLE IN DEGREES.
3. DIMENSIONS D AND E1 DO NOT INCLUDE MOLD PROTRUSION.
4. MAXIMUM MOLD PROTRUSION 0.15mm PER SIDE.
5. DIMENSION b DOES NOT INCLUDE DAMBAR PROTRUSION. ALLOWABLE DAMBAR PROTRUSION SHALL BE 0.127mm TOTAL IN EXCESS OF THE b DIMENSION AT MAXIMUM MATERIAL CONDITION.

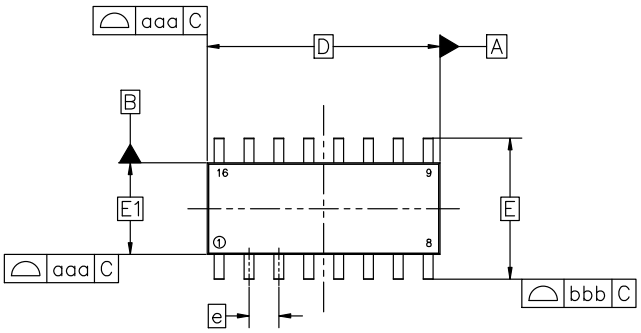

TOP VIEW

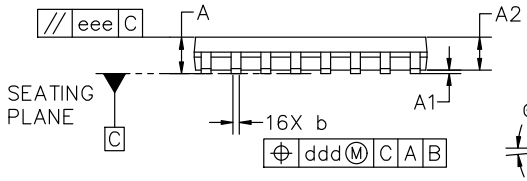

SIDE VIEW

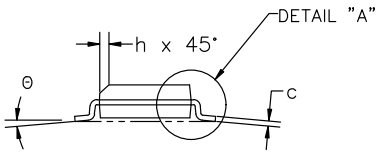

END VIEW

MILLIMETERS			
DIM	MIN	NOM	MAX
A	1.35	1.55	1.75
A1	0.00	0.05	0.10
A2	1.35	1.50	1.65
b	0.35	0.42	0.49
c	0.19	0.22	0.25
D	9.90 BSC		
E	6.00 BSC		
E1	3.90 BSC		
e	1.27 BSC		
h	0.25	−−−	0.50
L	0.40	0.83	1.25
L1	1.05 REF		
θ	0°	−−−	7°
TOLERANCE OF FORM AND POSITION			
aaa	0.10		
bbb	0.20		
ccc	0.10		
ddd	0.25		
eee	0.10		

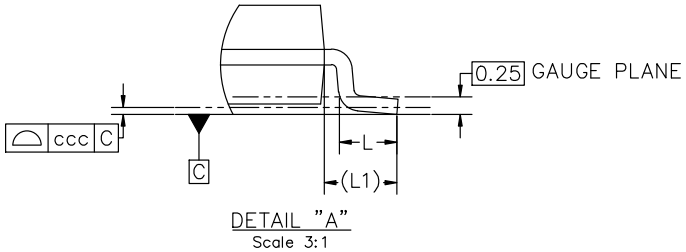

DETAIL "A"
Scale 3:1

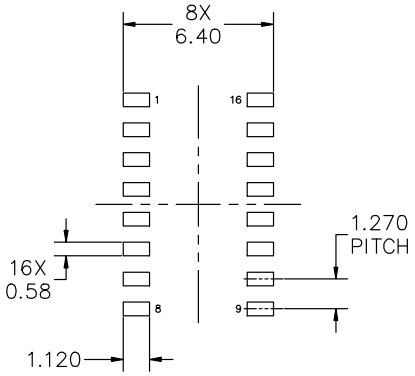

RECOMMENDED MOUNTING FOOTPRINT

*FOR ADDITIONAL INFORMATION ON OUR PB−FREE STRATEGY AND SOLDERING DETAILS, PLEASE DOWNLOAD THE onsemi SOLDERING AND MOUNTING TECHNIQUES REFERENCE MANUAL, SOLDERRM/D

DOCUMENT NUMBER:	98ASB42566B	Electronic versions are uncontrolled except when accessed directly from the Document Repository. Printed versions are uncontrolled except when stamped "CONTROLLED COPY" in red.
DESCRIPTION:	SOIC−16 9.90X3.90X1.50 1.27P	PAGE 1 OF 2

onsemi and onsemi are trademarks of Semiconductor Components Industries, LLC dba **onsemi** or its subsidiaries in the United States and/or other countries. **onsemi** reserves the right to make changes without further notice to any products herein. **onsemi** makes no warranty, representation or guarantee regarding the suitability of its products for any particular purpose, nor does **onsemi** assume any liability arising out of the application or use of any product or circuit, and specifically disclaims any and all liability, including without limitation special, consequential or incidental damages. **onsemi** does not convey any license under its patent rights nor the rights of others.

© Semiconductor Components Industries, LLC, 2019

SOIC−16 9.90x3.90x1.50 1.27P
CASE 751B
ISSUE L

DATE 29 MAY 2024

GENERIC
MARKING DIAGRAM*

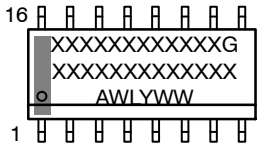

XXXXX = Specific Device Code
A = Assembly Location
WL = Wafer Lot
Y = Year
WW = Work Week
G = Pb−Free Package

*This information is generic. Please refer to device data sheet for actual part marking. Pb−Free indicator, "G" or microdot "▪", may or may not be present. Some products may not follow the Generic Marking.

STYLE 1:		STYLE 2:		STYLE 3:		STYLE 4:	
PIN 1.	COLLECTOR	PIN 1.	CATHODE	PIN 1.	COLLECTOR, DYE #1	PIN 1.	COLLECTOR, DYE #1
2.	BASE	2.	ANODE	2.	BASE, #1	2.	COLLECTOR, #1
3.	EMITTER	3.	NO CONNECTION	3.	EMITTER, #1	3.	COLLECTOR, #2
4.	NO CONNECTION	4.	CATHODE	4.	COLLECTOR, #1	4.	COLLECTOR, #2
5.	EMITTER	5.	CATHODE	5.	COLLECTOR, #2	5.	COLLECTOR, #3
6.	BASE	6.	NO CONNECTION	6.	BASE, #2	6.	COLLECTOR, #3
7.	COLLECTOR	7.	ANODE	7.	EMITTER, #2	7.	COLLECTOR, #4
8.	COLLECTOR	8.	CATHODE	8.	COLLECTOR, #2	8.	COLLECTOR, #4
9.	BASE	9.	CATHODE	9.	COLLECTOR, #3	9.	BASE, #4
10.	EMITTER	10.	ANODE	10.	BASE, #3	10.	EMITTER, #4
11.	NO CONNECTION	11.	NO CONNECTION	11.	EMITTER, #3	11.	BASE, #3
12.	EMITTER	12.	CATHODE	12.	COLLECTOR, #3	12.	EMITTER, #3
13.	BASE	13.	CATHODE	13.	COLLECTOR, #4	13.	BASE, #2
14.	COLLECTOR	14.	NO CONNECTION	14.	BASE, #4	14.	EMITTER, #2
15.	EMITTER	15.	ANODE	15.	EMITTER, #4	15.	BASE, #1
16.	COLLECTOR	16.	CATHODE	16.	COLLECTOR, #4	16.	EMITTER, #1

STYLE 5:		STYLE 6:		STYLE 7:	
PIN 1.	DRAIN, DYE #1	PIN 1.	CATHODE	PIN 1.	SOURCE N-CH
2.	DRAIN, #1	2.	CATHODE	2.	COMMON DRAIN (OUTPUT)
3.	DRAIN, #2	3.	CATHODE	3.	COMMON DRAIN (OUTPUT)
4.	DRAIN, #2	4.	CATHODE	4.	GATE P-CH
5.	DRAIN, #3	5.	CATHODE	5.	COMMON DRAIN (OUTPUT)
6.	DRAIN, #3	6.	CATHODE	6.	COMMON DRAIN (OUTPUT)
7.	DRAIN, #4	7.	CATHODE	7.	COMMON DRAIN (OUTPUT)
8.	DRAIN, #4	8.	CATHODE	8.	SOURCE P-CH
9.	GATE, #4	9.	ANODE	9.	SOURCE P-CH
10.	SOURCE, #4	10.	ANODE	10.	COMMON DRAIN (OUTPUT)
11.	GATE, #3	11.	ANODE	11.	COMMON DRAIN (OUTPUT)
12.	SOURCE, #3	12.	ANODE	12.	COMMON DRAIN (OUTPUT)
13.	GATE, #2	13.	ANODE	13.	GATE N-CH
14.	SOURCE, #2	14.	ANODE	14.	COMMON DRAIN (OUTPUT)
15.	GATE, #1	15.	ANODE	15.	COMMON DRAIN (OUTPUT)
16.	SOURCE, #1	16.	ANODE	16.	SOURCE N-CH

onsemi and onsemi are trademarks of Semiconductor Components Industries, LLC dba **onsemi** or its subsidiaries in the United States and/or other countries. **onsemi** reserves the right to make changes without further notice to any products herein. **onsemi** makes no warranty, representation or guarantee regarding the suitability of its products for any particular purpose, nor does **onsemi** assume any liability arising out of the application or use of any product or circuit, and specifically disclaims any and all liability, including without limitation special, consequential or incidental damages. **onsemi** does not convey any license under its patent rights nor the rights of others.

© Semiconductor Components Industries, LLC, 2019

MECHANICAL CASE OUTLINE
PACKAGE DIMENSIONS

SOIC−16 WB
CASE 751G
ISSUE E

DATE 08 OCT 2021

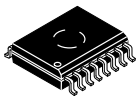

1
SCALE 1:1

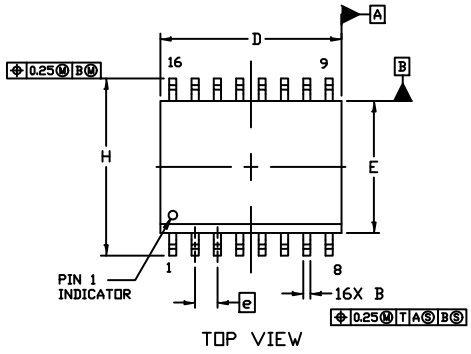

TOP VIEW

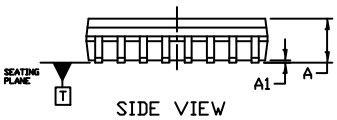

SIDE VIEW

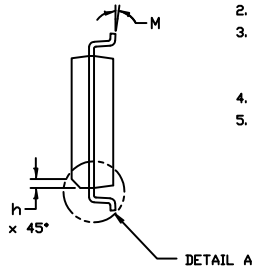

END VIEW

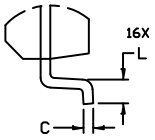

DETAIL A
2X SCALE

NOTES:
1. DIMENSIONING AND TOLERANCING PER ASME Y14.5M, 1994.
2. CONTROLLING DIMENSION: MILLIMETERS
3. DIMENSION b DOES NOT INCLUDE DAMBAR PROTRUSION. ALLOWABLE PROTRUSION SHALL BE 0.13 TOTAL IN EXCESS OF B DIMENSION AT MAXIMUM MATERIAL CONDITION.
4. DIMENSIONS D AND E DO NOT INCLUDE MOLD PROTRUSIONS.
5. MAXIMUM MOLD PROTRUSION OR FLASH TO BE 0.15 PER SIDE.

	MILLIMETERS	
DIM	MIN.	MAX.
A	2.35	2.65
A1	0.10	0.25
B	0.35	0.49
C	0.23	0.32
D	10.15	10.45
E	7.40	7.60
e	1.27 BSC	
H	10.05	10.55
h	0.53 REF	
L	0.50	0.90
M	0°	7°

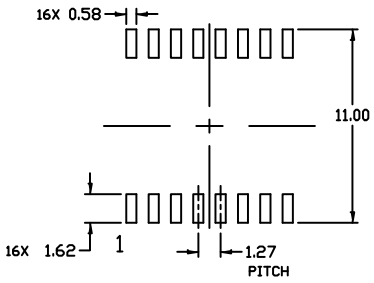

RECOMMENDED
MOUNTING FOOTPRINT

GENERIC
MARKING DIAGRAM*

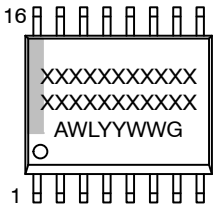

XXXXX = Specific Device Code
A = Assembly Location
WL = Wafer Lot
YY = Year
WW = Work Week
G = Pb−Free Package

*This information is generic. Please refer to device data sheet for actual part marking. Pb−Free indicator, “G” or microdot “▪”, may or may not be present. Some products may not follow the Generic Marking.

DOCUMENT NUMBER:	**98ASB42567B**	Electronic versions are uncontrolled except when accessed directly from the Document Repository. Printed versions are uncontrolled except when stamped “CONTROLLED COPY” in red.
DESCRIPTION:	**SOIC−16 WB**	**PAGE 1 OF 1**

onsemi and onsemi are trademarks of Semiconductor Components Industries, LLC dba **onsemi** or its subsidiaries in the United States and/or other countries. **onsemi** reserves the right to make changes without further notice to any products herein. **onsemi** makes no warranty, representation or guarantee regarding the suitability of its products for any particular purpose, nor does **onsemi** assume any liability arising out of the application or use of any product or circuit, and specifically disclaims any and all liability, including without limitation special, consequential or incidental damages. **onsemi** does not convey any license under its patent rights nor the rights of others.

© Semiconductor Components Industries, LLC, 2019

MECHANICAL CASE OUTLINE
PACKAGE DIMENSIONS

TSSOP−16 WB
CASE 948F
ISSUE B

DATE 19 OCT 2006

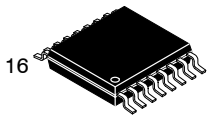

SCALE 2:1

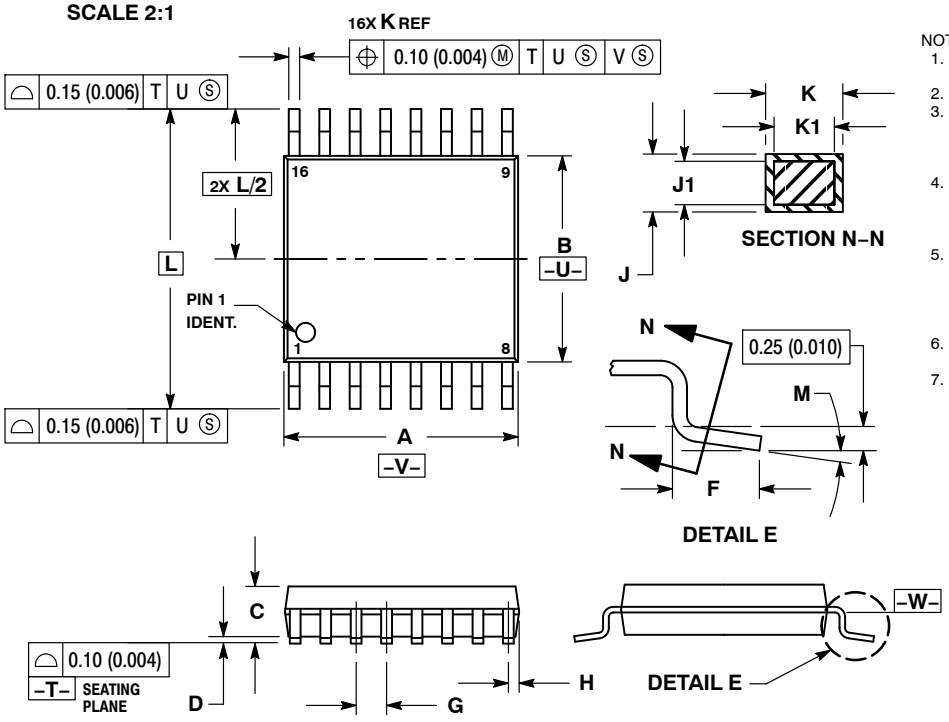

NOTES:
1. DIMENSIONING AND TOLERANCING PER ANSI Y14.5M, 1982.
2. CONTROLLING DIMENSION: MILLIMETER.
3. DIMENSION A DOES NOT INCLUDE MOLD FLASH. PROTRUSIONS OR GATE BURRS. MOLD FLASH OR GATE BURRS SHALL NOT EXCEED 0.15 (0.006) PER SIDE.
4. DIMENSION B DOES NOT INCLUDE INTERLEAD FLASH OR PROTRUSION. INTERLEAD FLASH OR PROTRUSION SHALL NOT EXCEED 0.25 (0.010) PER SIDE.
5. DIMENSION K DOES NOT INCLUDE DAMBAR PROTRUSION. ALLOWABLE DAMBAR PROTRUSION SHALL BE 0.08 (0.003) TOTAL IN EXCESS OF THE K DIMENSION AT MAXIMUM MATERIAL CONDITION.
6. TERMINAL NUMBERS ARE SHOWN FOR REFERENCE ONLY.
7. DIMENSION A AND B ARE TO BE DETERMINED AT DATUM PLANE −W−.

	MILLIMETERS		INCHES	
DIM	MIN	MAX	MIN	MAX
A	4.90	5.10	0.193	0.200
B	4.30	4.50	0.169	0.177
C	−−−	1.20	−−−	0.047
D	0.05	0.15	0.002	0.006
F	0.50	0.75	0.020	0.030
G	0.65 BSC		0.026 BSC	
H	0.18	0.28	0.007	0.011
J	0.09	0.20	0.004	0.008
J1	0.09	0.16	0.004	0.006
K	0.19	0.30	0.007	0.012
K1	0.19	0.25	0.007	0.010
L	6.40 BSC		0.252 BSC	
M	0 °	8 °	0 °	8 °

RECOMMENDED SOLDERING FOOTPRINT*

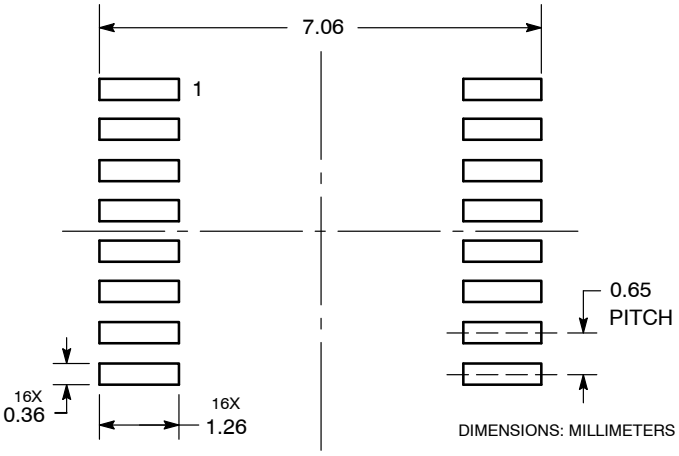

*For additional information on our Pb−Free strategy and soldering details, please download the **onsemi** Soldering and Mounting Techniques Reference Manual, SOLDERRM/D.

GENERIC MARKING DIAGRAM*

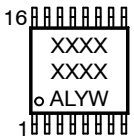

XXXX	= Specific Device Code
A	= Assembly Location
L	= Wafer Lot
Y	= Year
W	= Work Week
G or ▪	= Pb−Free Package

*This information is generic. Please refer to device data sheet for actual part marking. Pb−Free indicator, “G” or microdot “ ▪”, may or may not be present. Some products may not follow the Generic Marking.

DOCUMENT NUMBER:	**98ASH70247A**	Electronic versions are uncontrolled except when accessed directly from the Document Repository. Printed versions are uncontrolled except when stamped “CONTROLLED COPY” in red.	
DESCRIPTION:	**TSSOP−16**		**PAGE 1 OF 1**

onsemi and onsemi are trademarks of Semiconductor Components Industries, LLC dba **onsemi** or its subsidiaries in the United States and/or other countries. **onsemi** reserves the right to make changes without further notice to any products herein. **onsemi** makes no warranty, representation or guarantee regarding the suitability of its products for any particular purpose, nor does **onsemi** assume any liability arising out of the application or use of any product or circuit, and specifically disclaims any and all liability, including without limitation special, consequential or incidental damages. **onsemi** does not convey any license under its patent rights nor the rights of others.

© Semiconductor Components Industries, LLC, 2019

onsemi, , and other names, marks, and brands are registered and/or common law trademarks of Semiconductor Components Industries, LLC dba "**onsemi**" or its affiliates and/or subsidiaries in the United States and/or other countries. **onsemi** owns the rights to a number of patents, trademarks, copyrights, trade secrets, and other intellectual property. A listing of **onsemi**'s product/patent coverage may be accessed at www.onsemi.com/site/pdf/Patent−Marking.pdf. **onsemi** reserves the right to make changes at any time to any products or information herein, without notice. The information herein is provided "as−is" and **onsemi** makes no warranty, representation or guarantee regarding the accuracy of the information, product features, availability, functionality, or suitability of its products for any particular purpose, nor does **onsemi** assume any liability arising out of the application or use of any product or circuit, and specifically disclaims any and all liability, including without limitation special, consequential or incidental damages. Buyer is responsible for its products and applications using **onsemi** products, including compliance with all laws, regulations and safety requirements or standards, regardless of any support or applications information provided by **onsemi**. "Typical" parameters which may be provided in **onsemi** data sheets and/or specifications can and do vary in different applications and actual performance may vary over time. All operating parameters, including "Typicals" must be validated for each customer application by customer's technical experts. **onsemi** does not convey any license under any of its intellectual property rights nor the rights of others. **onsemi** products are not designed, intended, or authorized for use as a critical component in life support systems or any FDA Class 3 medical devices or medical devices with a same or similar classification in a foreign jurisdiction or any devices intended for implantation in the human body. Should Buyer purchase or use **onsemi** products for any such unintended or unauthorized application, Buyer shall indemnify and hold **onsemi** and its officers, employees, subsidiaries, affiliates, and distributors harmless against all claims, costs, damages, and expenses, and reasonable attorney fees arising out of, directly or indirectly, any claim of personal injury or death associated with such unintended or unauthorized use, even if such claim alleges that **onsemi** was negligent regarding the design or manufacture of the part. **onsemi** is an Equal Opportunity/Affirmative Action Employer. This literature is subject to all applicable copyright laws and is not for resale in any manner.

ADDITIONAL INFORMATION

TECHNICAL PUBLICATIONS:
Technical Library: www.onsemi.com/design/resources/technical−documentation
onsemi Website: www.onsemi.com

ONLINE SUPPORT: www.onsemi.com/support
For additional information, please contact your local Sales Representative at www.onsemi.com/support/sales