MC74LCX74

Low-Voltage CMOS Dual D-Type Flip-Flop

With 5 V−Tolerant Inputs

The MC74LCX74 is a high performance, dual D−type flip−flop with asynchronous clear and set inputs and complementary (O, $\overline{O}$) outputs. It operates from a 2.3 to 3.6 V supply. High impedance TTL compatible inputs significantly reduce current loading to input drivers while TTL compatible outputs offer improved switching noise performance. A V_I specification of 5.5 V allows MC74LCX74 inputs to be safely driven from 5.0 V devices.

The MC74LCX74 consists of 2 edge−triggered flip−flops with individual D−type inputs. The flip−flop will store the state of individual D inputs, that meet the setup and hold time requirements, on the LOW−to−HIGH Clock (CP) transition.

Features

- Designed for 2.3 V to 3.6 V V_{CC} Operation
- 5.0 V Tolerant Inputs − Interface Capability With 5.0 V TTL Logic
- LVTTL Compatible
- LVCMOS Compatible
- 24 mA Balanced Output Sink and Source Capability
- Near Zero Static Supply Current in All Three Logic States (10 μA) Substantially Reduces System Power Requirements
- Latchup Performance Exceeds 500 mA
- ESD Performance: Human Body Model >2000 V
  Machine Model >200 V
- These Devices are Pb−Free, Halogen Free/BFR Free and are RoHS Compliant

ON Semiconductor®

http://onsemi.com

MARKING DIAGRAMS

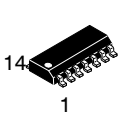

SOIC−14
D SUFFIX
CASE 751A

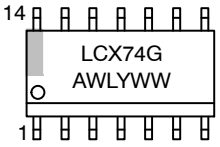

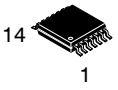

TSSOP−14
DT SUFFIX
CASE 948G

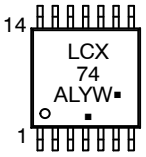

A	=	Assembly Location
L, WL	=	Wafer Lot
Y, YY	=	Year
W, WW	=	Work Week
G or ▪	=	Pb−Free Package

(Note: Microdot may be in either location)

ORDERING INFORMATION

See detailed ordering and shipping information in the package dimensions section on page 3 of this data sheet.

© Semiconductor Components Industries, LLC, 2012

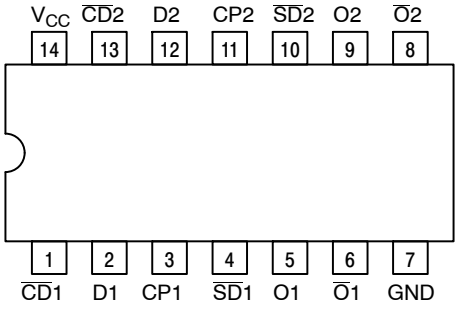

Figure 1. Pinout: 14−Lead (Top View)

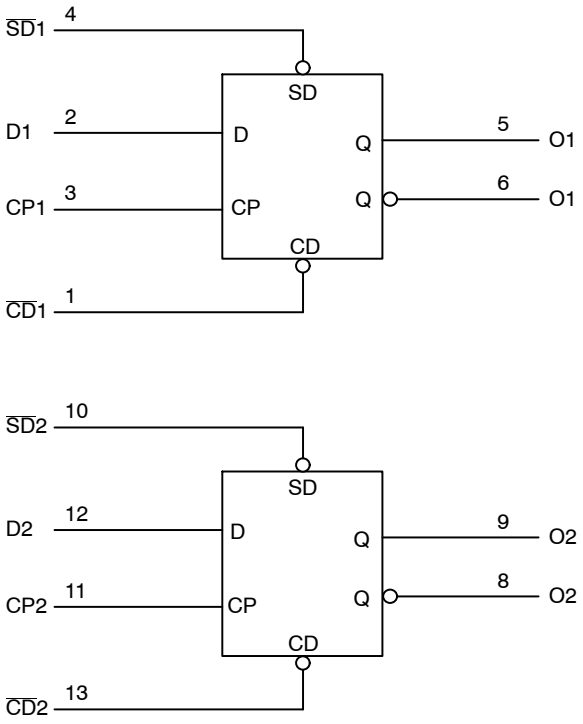

Figure 2. Logic Diagram

PIN NAMES

Pins	Function
CP1, CP2	Clock Pulse Inputs
D1−D2	Data Inputs
$\overline{CD}1$, $\overline{CD}2$	Direct Clear Inputs
$\overline{SD}1$, $\overline{SD}2$	Direct Set Inputs
On−$\overline{On}$	Outputs

TRUTH TABLE

Inputs				Outputs		
$\overline{SD}n$	$\overline{CD}n$	CPn	Dn	On	$\overline{On}$	Operating Mode
L	H	X	X	H	L	Asynchronous Set
H	L	X	X	L	H	Asynchronous Clear
L	L	X	X	H	H	Undetermined
H	H	↑	h	H	L	Load and Read Register
H	H	↑	l	L	H	
H	H	↑	X	NC	NC	Hold

H = High Voltage Level
h = High Voltage Level One Setup Time Prior to the Low−to−High Clock Transition
L = Low Voltage Level
l = Low Voltage Level One Setup Time Prior to the Low−to−High Clock Transition
NC = No Change
X = High or Low Voltage Level and Transitions are Acceptable
↑ = Low−to−High Transition
↑ = Not a Low−to−High Transition

For I_{CC} reasons, DO NOT FLOAT Inputs

MAXIMUM RATINGS

Symbol	Parameter	Value	Condition	Units
V_{CC}	DC Supply Voltage	−0.5 to +7.0		V
V_I	DC Input Voltage	$-0.5 \le V_I \le +7.0$		V
V_O	DC Output Voltage	$-0.5 \le V_O \le V_{CC} + 0.5$	Output in HIGH or LOW State (Note 1)	V
I_{IK}	DC Input Diode Current	−50	$V_I < GND$	mA
I_{OK}	DC Output Diode Current	−50	$V_O < GND$	mA
		+50	$V_O > V_{CC}$	mA
I_O	DC Output Source/Sink Current	±50		mA
I_{CC}	DC Supply Current Per Supply Pin	±100		mA
I_{GND}	DC Ground Current Per Ground Pin	±100		mA
T_{STG}	Storage Temperature Range	−65 to +150		°C
MSL	Moisture Sensitivity		Level 1	

Maximum ratings are those values beyond which device damage can occur. Maximum ratings applied to the device are individual stress limit values (not normal operating conditions) and are not valid simultaneously. If these limits are exceeded, device functional operation is not implied, damage may occur and reliability may be affected.

1. I_O absolute maximum rating must be observed.

RECOMMENDED OPERATING CONDITIONS

Symbol	Parameter	Min	Type	Max	Units
V_{CC}	Supply Voltage Operating Data Retention Only	 2.0 1.5	 2.5, 3.3 2.5, 3.3	 3.6 3.6	V
V_I	Input Voltage	0		5.5	V
V_O	Output Voltage (HIGH or LOW State)	0		V_{CC}	V
I_{OH}	HIGH Level Output Current V_{CC} = 3.0 V – 3.6 V V_{CC} = 2.7 V – 3.0 V V_{CC} = 2.3 V – 2.7 V			 −24 −12 −8	mA
I_{OL}	LOW Level Output Current V_{CC} = 3.0 V – 3.6 V V_{CC} = 2.7 V – 3.0 V V_{CC} = 2.3 V – 2.7 V			 +24 +12 +8	mA
T_A	Operating Free−Air Temperature	−40		+85	°C
$\Delta t/\Delta V$	Input Transition Rise or Fall Rate, V_{IN} from 0.8 V to 2.0 V, V_{CC} = 3.0 V	0		10	ns/V

ORDERING INFORMATION

Device	Package	Shipping†
MC74LCX74DG	SOIC−14 (Pb−Free)	55 Units / Rail
MC74LCX74DR2G	SOIC−14 (Pb−Free)	2500 Tape & Reel
MC74LCX74DTG	TSSOP−14 (Pb−Free)	96 Units / Rail
MC74LCX74DTR2G	TSSOP−14 (Pb−Free)	2500 Tape & Reel

†For information on tape and reel specifications, including part orientation and tape sizes, please refer to our Tape and Reel Packaging Specifications Brochure, BRD8011/D.

DC ELECTRICAL CHARACTERISTICS

Symbol	Characteristic	Condition	T_A = −40°C to +85°C		Units
			Min	Max	
V_{IH}	HIGH Level Input Voltage (Note 2)	2.3 V ≤ V_{CC} ≤ 2.7 V	1.7		V
		2.7 V ≤ V_{CC} ≤ 3.6 V	2.0		
V_{IL}	LOW Level Input Voltage (Note 2)	2.3 V ≤ V_{CC} ≤ 2.7 V		0.7	V
		2.7 V ≤ V_{CC} ≤ 3.6 V		0.8	
V_{OH}	HIGH Level Output Voltage	2.3 V ≤ V_{CC} ≤ 3.6 V; I_{OH} = −100 μA	V_{CC} − 0.2		V
		V_{CC} = 2.3 V; I_{OH} = −8 mA	1.8		
		V_{CC} = 2.7 V; I_{OH} = −12 mA	2.2		
		V_{CC} = 3.0 V; I_{OH} = −18 mA	2.4		
		V_{CC} = 3.0 V; I_{OH} = −24 mA	2.2		
V_{OL}	LOW Level Output Voltage	2.3 V ≤ V_{CC} ≤ 3.6 V; I_{OL} = 100 μA		0.2	V
		V_{CC} = 2.3 V; I_{OL} = 8 mA		0.6	
		V_{CC} = 2.7 V; I_{OL} = 12 mA		0.4	
		V_{CC} = 3.0 V; I_{OL} = 16 mA		0.4	
		V_{CC} = 3.0 V; I_{OL} = 24 mA		0.55	
I_{OFF}	Power Off Leakage Current	V_{CC} = 0, V_{IN} = 5.5 V or V_{OUT} = 5.5 V		10	μA
I_{IN}	Input Leakage Current	V_{CC} = 3.6 V, V_{IN} = 5.5 V or GND		±5	μA
I_{CC}	Quiescent Supply Current	V_{CC} = 3.6 V, V_{IN} = 5.5 V or GND		10	μA
ΔI_{CC}	Increase in I_{CC} per Input	2.3 ≤ V_{CC} ≤ 3.6 V; V_{IH} = V_{CC} − 0.6 V		500	μA

2. These values of V_I are used to test DC electrical characteristics only.

AC CHARACTERISTICS (t_R = t_F = 2.5 ns; R_L = 500 Ω)

Symbol	Parameter	Waveform	Limits						Units
			T_A = −40°C to +85°C						
			V_{CC} = 3.3 V ± 0.3 V		V_{CC} = 2.7 V		V_{CC} = 2.5 V ± 0.2 V		
			C_L = 50 pF		C_L = 50 pF		C_L = 30 pF		
			Min	Max	Min	Max	Min	Max	
f_{max}	Clock Pulse Frequency	1	150		150		150		MHz
t_{PLH} t_{PHL}	Propagation Delay CPn to On or $\overline{On}$	1	1.5 1.5	7.0 7.0	1.5 1.5	8.0 8.0	1.5 1.5	8.4 8.4	ns
t_{PLH} t_{PHL}	Propagation Delay $\overline{SD}$n or $\overline{CD}$n to On or $\overline{On}$	2	1.5 1.5	7.0 7.0	1.5 1.5	8.0 8.0	1.5 1.5	8.4 8.4	ns
t_s	Setup Time, HIGH or LOW Dn to CPn	1	2.5		2.5		4.0		ns
t_h	Hold Time, HIGH or LOW Dn to CPn	1	1.5		1.5		2.0		ns
t_w	CPn Pulse Width, HIGH or LOW $\overline{SD}$n or $\overline{CD}$n Pulse Width, LOW	4	3.3 3.3		3.3 3.6		4.0 4.0		ns
t_{rec}	Recovery Time $\overline{SD}$n or $\overline{CD}$n to CPn	3	2.5		3.0		4.5		ns
t_{OSHL} t_{OSLH}	Output−to−Output Skew (Note 3)			1.0 1.0					ns

3. Skew is defined as the absolute value of the difference between the actual propagation delay for any two separate outputs of the same device. The specification applies to any outputs switching in the same direction, either HIGH−to−LOW (t_{OSHL}) or LOW−to−HIGH (t_{OSLH}); parameter guaranteed by design.

DYNAMIC SWITCHING CHARACTERISTICS

Symbol	Characteristic	Condition	T_A = +25°C			Units
			Min	Typ	Max	
V_{OLP}	Dynamic LOW Peak Voltage (Note 4)	V_{CC} = 3.3 V, C_L = 50 pF, V_{IH} = 3.3 V, V_{IL} = 0 V V_{CC} = 2.5 V, C_L = 30 pF, V_{IH} = 2.5 V, V_{IL} = 0 V		0.8 0.6		V V
V_{OLV}	Dynamic LOW Valley Voltage (Note 4)	V_{CC} = 3.3 V, C_L = 50 pF, V_{IH} = 3.3 V, V_{IL} = 0 V V_{CC} = 2.5 V, C_L = 30 pF, V_{IH} = 2.5 V, V_{IL} = 0 V		−0.8 −0.6		V V

4. Number of outputs defined as “n”. Measured with “n−1” outputs switching from HIGH−to−LOW or LOW−to−HIGH. The remaining output is measured in the LOW state.

CAPACITIVE CHARACTERISTICS

Symbol	Parameter	Condition	Typical	Units
C_{IN}	Input Capacitance	V_{CC} = 3.3 V, V_I = 0 V or V_{CC}	7	pF
C_{OUT}	Output Capacitance	V_{CC} = 3.3 V, V_I = 0 V or V_{CC}	8	pF
C_{PD}	Power Dissipation Capacitance	10 MHz, V_{CC} = 3.3 V, V_I = 0 V or V_{CC}	25	pF

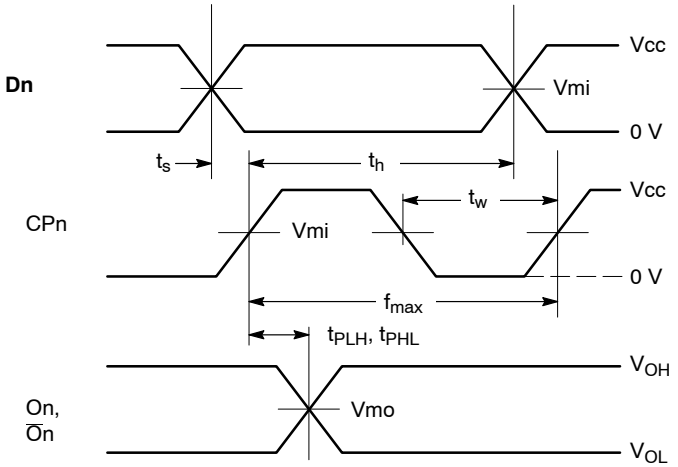

WAVEFORM 1 – PROPAGATION DELAYS, SETUP AND HOLD TIMES
$t_R = t_F$ = 2.5 ns, 10% to 90%; f = 1 MHz; t_W = 500 ns

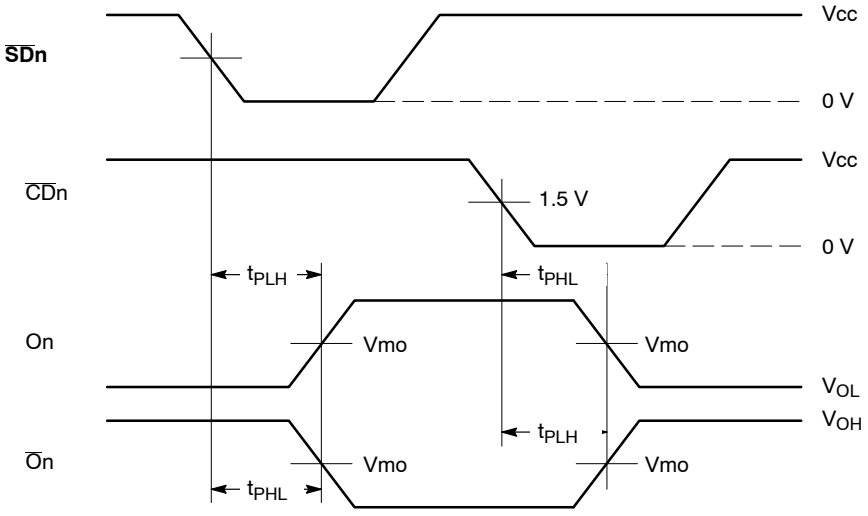

WAVEFORM 2 – PROPAGATION DELAYS
$t_R = t_F$ = 2.5 ns, 10% to 90%; f = 1 MHz; t_W = 500 ns

Figure 3. AC Waveforms

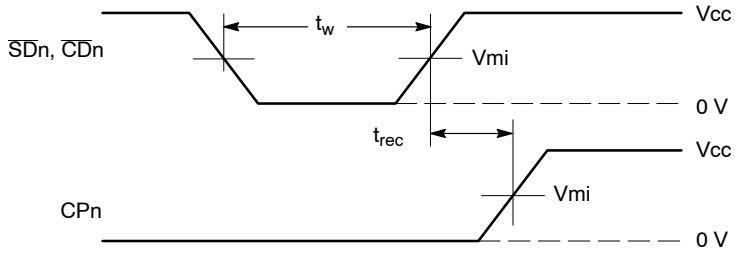

WAVEFORM 3 – RECOVERY TIME
$t_R = t_F$ = 2.5 ns from 10% to 90%; f = 1 MHz; t_w = 500 ns

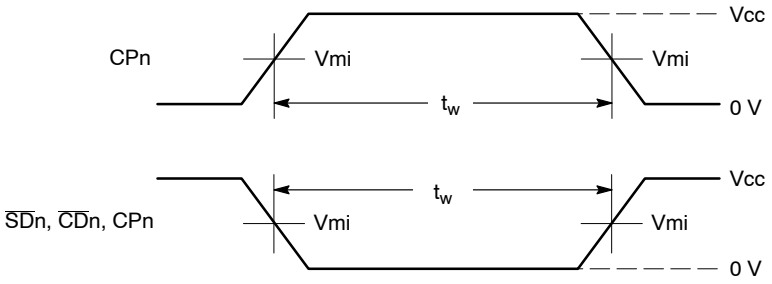

WAVEFORM 4 – PULSE WIDTH
$t_R = t_F$ = 2.5 ns (or fast as required) from 10% to 90%;
Output requirements: $V_{OL} \leq 0.8$ V, $V_{OH} \geq 2.0$ V

Symbol	Vcc		
	3.3 V ± 0.3 V	**2.7 V**	**2.5 V ± 0.2 V**
Vmi	1.5 V	1.5 V	Vcc/2
Vmo	1.5 V	1.5 V	Vcc/2

Figure 3. AC Waveforms (Continued)

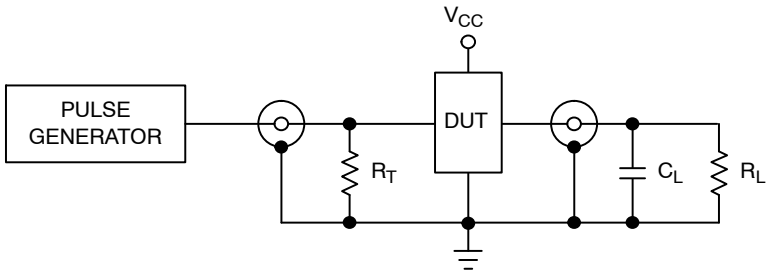

C_L = 50 pF at V_{CC} = 3.3 ± 0.3 V or equivalent (includes jig and probe capacitance)
C_L = 30 pF at V_{CC} = 2.5 ± 0.2 V or equivalent (includes jig and probe capacitance)
R_L = R_1 = 500 Ω or equivalent
R_T = Z_{OUT} of pulse generator (typically 50 Ω)

Figure 4. Test Circuit

MECHANICAL CASE OUTLINE
PACKAGE DIMENSIONS

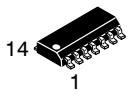

SCALE 1:1

SOIC−14 NB
CASE 751A−03
ISSUE L

DATE 03 FEB 2016

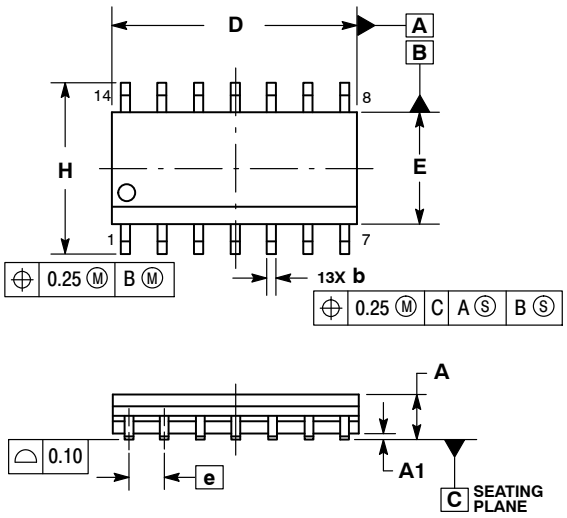

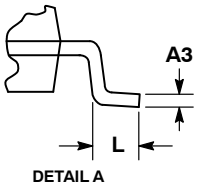

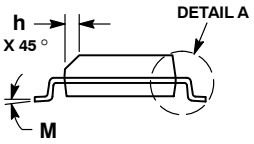

NOTES:
1. DIMENSIONING AND TOLERANCING PER ASME Y14.5M, 1994.
2. CONTROLLING DIMENSION: MILLIMETERS.
3. DIMENSION b DOES NOT INCLUDE DAMBAR PROTRUSION. ALLOWABLE PROTRUSION SHALL BE 0.13 TOTAL IN EXCESS OF AT MAXIMUM MATERIAL CONDITION.
4. DIMENSIONS D AND E DO NOT INCLUDE MOLD PROTRUSIONS.
5. MAXIMUM MOLD PROTRUSION 0.15 PER SIDE.

	MILLIMETERS		INCHES	
DIM	MIN	MAX	MIN	MAX
A	1.35	1.75	0.054	0.068
A1	0.10	0.25	0.004	0.010
A3	0.19	0.25	0.008	0.010
b	0.35	0.49	0.014	0.019
D	8.55	8.75	0.337	0.344
E	3.80	4.00	0.150	0.157
e	1.27 BSC		0.050 BSC	
H	5.80	6.20	0.228	0.244
h	0.25	0.50	0.010	0.019
L	0.40	1.25	0.016	0.049
M	0 °	7 °	0 °	7 °

SOLDERING FOOTPRINT*

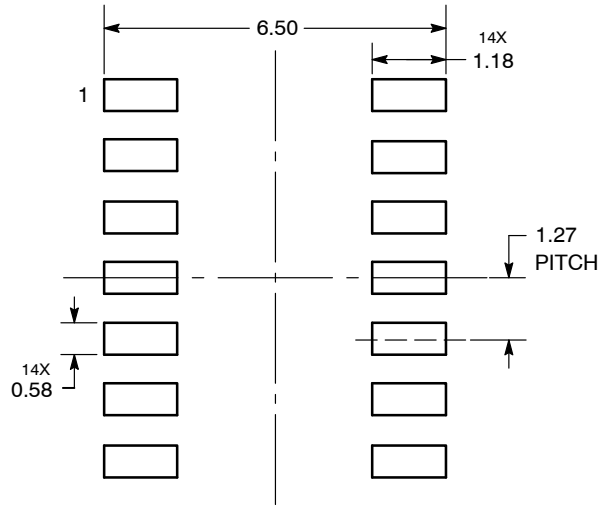

DIMENSIONS: MILLIMETERS

*For additional information on our Pb−Free strategy and soldering details, please download the ON Semiconductor Soldering and Mounting Techniques Reference Manual, SOLDERRM/D.

GENERIC MARKING DIAGRAM*

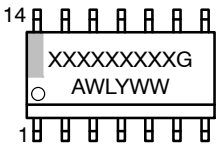

XXXXX = Specific Device Code
A = Assembly Location
WL = Wafer Lot
Y = Year
WW = Work Week
G = Pb−Free Package

*This information is generic. Please refer to device data sheet for actual part marking. Pb−Free indicator, “G” or microdot “▪”, may or may not be present. Some products may not follow the Generic Marking.

STYLES ON PAGE 2

DOCUMENT NUMBER:	**98ASB42565B**	Electronic versions are uncontrolled except when accessed directly from the Document Repository. Printed versions are uncontrolled except when stamped “CONTROLLED COPY” in red.	
DESCRIPTION:	**SOIC−14 NB**		**PAGE 1 OF 2**

onsemi and onsemi are trademarks of Semiconductor Components Industries, LLC dba **onsemi** or its subsidiaries in the United States and/or other countries. **onsemi** reserves the right to make changes without further notice to any products herein. **onsemi** makes no warranty, representation or guarantee regarding the suitability of its products for any particular purpose, nor does **onsemi** assume any liability arising out of the application or use of any product or circuit, and specifically disclaims any and all liability, including without limitation special, consequential or incidental damages. **onsemi** does not convey any license under its patent rights nor the rights of others.

© Semiconductor Components Industries, LLC, 2019

SOIC−14
CASE 751A−03
ISSUE L

DATE 03 FEB 2016

STYLE 1:
PIN 1. COMMON CATHODE
2. ANODE/CATHODE
3. ANODE/CATHODE
4. NO CONNECTION
5. ANODE/CATHODE
6. NO CONNECTION
7. ANODE/CATHODE
8. ANODE/CATHODE
9. ANODE/CATHODE
10. NO CONNECTION
11. ANODE/CATHODE
12. ANODE/CATHODE
13. NO CONNECTION
14. COMMON ANODE

STYLE 2:
CANCELLED

STYLE 3:
PIN 1. NO CONNECTION
2. ANODE
3. ANODE
4. NO CONNECTION
5. ANODE
6. NO CONNECTION
7. ANODE
8. ANODE
9. ANODE
10. NO CONNECTION
11. ANODE
12. ANODE
13. NO CONNECTION
14. COMMON CATHODE

STYLE 4:
PIN 1. NO CONNECTION
2. CATHODE
3. CATHODE
4. NO CONNECTION
5. CATHODE
6. NO CONNECTION
7. CATHODE
8. CATHODE
9. CATHODE
10. NO CONNECTION
11. CATHODE
12. CATHODE
13. NO CONNECTION
14. COMMON ANODE

STYLE 5:
PIN 1. COMMON CATHODE
2. ANODE/CATHODE
3. ANODE/CATHODE
4. ANODE/CATHODE
5. ANODE/CATHODE
6. NO CONNECTION
7. COMMON ANODE
8. COMMON CATHODE
9. ANODE/CATHODE
10. ANODE/CATHODE
11. ANODE/CATHODE
12. ANODE/CATHODE
13. NO CONNECTION
14. COMMON ANODE

STYLE 6:
PIN 1. CATHODE
2. CATHODE
3. CATHODE
4. CATHODE
5. CATHODE
6. CATHODE
7. CATHODE
8. ANODE
9. ANODE
10. ANODE
11. ANODE
12. ANODE
13. ANODE
14. ANODE

STYLE 7:
PIN 1. ANODE/CATHODE
2. COMMON ANODE
3. COMMON CATHODE
4. ANODE/CATHODE
5. ANODE/CATHODE
6. ANODE/CATHODE
7. ANODE/CATHODE
8. ANODE/CATHODE
9. ANODE/CATHODE
10. ANODE/CATHODE
11. COMMON CATHODE
12. COMMON ANODE
13. ANODE/CATHODE
14. ANODE/CATHODE

STYLE 8:
PIN 1. COMMON CATHODE
2. ANODE/CATHODE
3. ANODE/CATHODE
4. NO CONNECTION
5. ANODE/CATHODE
6. ANODE/CATHODE
7. COMMON ANODE
8. COMMON ANODE
9. ANODE/CATHODE
10. ANODE/CATHODE
11. NO CONNECTION
12. ANODE/CATHODE
13. ANODE/CATHODE
14. COMMON CATHODE

onsemi and ONSEMI. are trademarks of Semiconductor Components Industries, LLC dba **onsemi** or its subsidiaries in the United States and/or other countries. **onsemi** reserves the right to make changes without further notice to any products herein. **onsemi** makes no warranty, representation or guarantee regarding the suitability of its products for any particular purpose, nor does **onsemi** assume any liability arising out of the application or use of any product or circuit, and specifically disclaims any and all liability, including without limitation special, consequential or incidental damages. **onsemi** does not convey any license under its patent rights nor the rights of others.

© Semiconductor Components Industries, LLC, 2019

onsemi, , and other names, marks, and brands are registered and/or common law trademarks of Semiconductor Components Industries, LLC dba "**onsemi**" or its affiliates and/or subsidiaries in the United States and/or other countries. **onsemi** owns the rights to a number of patents, trademarks, copyrights, trade secrets, and other intellectual property. A listing of **onsemi**'s product/patent coverage may be accessed at www.onsemi.com/site/pdf/Patent−Marking.pdf. **onsemi** reserves the right to make changes at any time to any products or information herein, without notice. The information herein is provided "as−is" and **onsemi** makes no warranty, representation or guarantee regarding the accuracy of the information, product features, availability, functionality, or suitability of its products for any particular purpose, nor does **onsemi** assume any liability arising out of the application or use of any product or circuit, and specifically disclaims any and all liability, including without limitation special, consequential or incidental damages. Buyer is responsible for its products and applications using **onsemi** products, including compliance with all laws, regulations and safety requirements or standards, regardless of any support or applications information provided by **onsemi**. "Typical" parameters which may be provided in **onsemi** data sheets and/or specifications can and do vary in different applications and actual performance may vary over time. All operating parameters, including "Typicals" must be validated for each customer application by customer's technical experts. **onsemi** does not convey any license under any of its intellectual property rights nor the rights of others. **onsemi** products are not designed, intended, or authorized for use as a critical component in life support systems or any FDA Class 3 medical devices or medical devices with a same or similar classification in a foreign jurisdiction or any devices intended for implantation in the human body. Should Buyer purchase or use **onsemi** products for any such unintended or unauthorized application, Buyer shall indemnify and hold **onsemi** and its officers, employees, subsidiaries, affiliates, and distributors harmless against all claims, costs, damages, and expenses, and reasonable attorney fees arising out of, directly or indirectly, any claim of personal injury or death associated with such unintended or unauthorized use, even if such claim alleges that **onsemi** was negligent regarding the design or manufacture of the part. **onsemi** is an Equal Opportunity/Affirmative Action Employer. This literature is subject to all applicable copyright laws and is not for resale in any manner.

ADDITIONAL INFORMATION

TECHNICAL PUBLICATIONS:
Technical Library: www.onsemi.com/design/resources/technical−documentation
onsemi Website: www.onsemi.com

ONLINE SUPPORT: www.onsemi.com/support
For additional information, please contact your local Sales Representative at www.onsemi.com/support/sales