500 mA Positive Voltage Regulators

MC78M00, MC78M00A, NCV78M00 Series

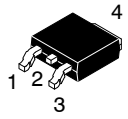

DPAK−3
DT SUFFIX
CASE 369C

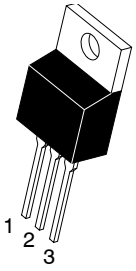

TO−220
T SUFFIX
CASE 221AB

Description

The MC78M00/MC78M00A Series positive voltage regulators are identical to the popular MC7800 Series devices, except that they are specified for only half the output current. Like the MC7800 devices, the MC78M00 three−terminal regulators are intended for local, on−card voltage regulation.

Internal current limiting, thermal shutdown circuitry and safe−area compensation for the internal pass transistor combine to make these devices remarkably rugged under most operating conditions. Maximum output current, with adequate heatsinking is 500 mA.

Features

- No External Components Required
- Internal Thermal Overload Protection
- Internal Short Circuit Current Limiting
- Output Transistor Safe−Area Compensation
- MC78M00A High Accuracy (±2%)
  Available for 5.0 V, 8.0 V, 12 V and 15 V
- NCV Prefix for Automotive and Other Applications Requiring Unique Site and Control Change Requirements; AEC−Q100 Qualified and PPAP Capable
- These are Pb−Free Devices

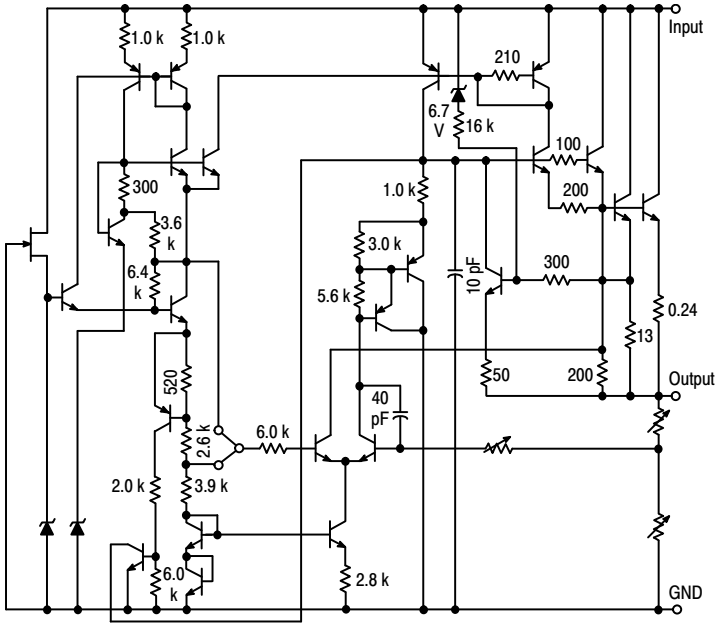

This device contains 28 active transistors.

Figure 1. Representative Schematic Diagram

MARKINGDIAGRAMS

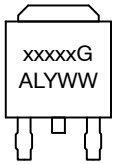

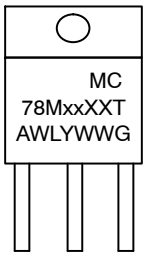

Heatsink surface
connected to Pin 2.

xx = Voltage Option
XX = Appropriate Suffix Options
A = Assembly Location
WL = Wafer Lot
Y = Year
WW = Work Week
G = Pb−Free Package

Heatsink surface (shown as terminal 4 in case outline drawing) is connected to Pin 2.

xxxxx = Device Type and Voltage Option Code
A = Assembly Location
L = Wafer Lot
Y = Year
WW = Work Week
G = Pb−Free Package

Pin 1. Input
2. Ground
3. Output

ORDERING INFORMATION

See detailed ordering and shipping information in the package dimensions section on page 10−14 of this data sheet.

DEVICE MARKING INFORMATION

See general marking information in the device marking section on page 10 of this data sheet.

© Semiconductor Components Industries, LLC, 2016

MAXIMUM RATINGS (T_A = 25°C, unless otherwise noted) (Note 1)

Rating	Symbol	Value	Unit
Input Voltage (5.0 V−18 V) (20 V−24V)	V_I	 35 40	Vdc
Power Dissipation (Package Limitation) Plastic Package, T Suffix T_A = 25°C Thermal Resistance, Junction-to-Air Thermal Resistance, Junction-to-Case Plastic Package, DT Suffix T_A = 25°C Thermal Resistance, Junction-to-Air Thermal Resistance, Junction-to-Case	 P_D θ_{JA} θ_{JC} P_D θ_{JA} θ_{JC}	 Internally Limited 70 5.0 Internally Limited 92 5.0	°C/W
Operating Junction Temperature Range	T_J	+150	°C
Storage Temperature Range	T_{stg}	−65 to +150	°C

Stresses exceeding those listed in the Maximum Ratings table may damage the device. If any of these limits are exceeded, device functionality should not be assumed, damage may occur and reliability may be affected.

1. This device series contains ESD protection and exceeds the following tests:
   Human Body Model 2000 V per MIL−STD−883, Method 3015.
   Machine Model Method 200 V.

MC78M05C/AC/B/AB, NCV78M05AB/B ELECTRICAL CHARACTERISTICS

(V_I = 10 V, I_O = 350 mA, T_J = T_{low} to T_{high}, $P_D \le$ 5 W, unless otherwise noted) (Note 2)

Characteristics	Symbol	Min	Typ	Max	Unit
Output Voltage (T_J = 25°C) MC78M05B/MC78M05C/NCV78M05B MC78M05AB/MC78M05AC/NCV78M05AB	V_O	 4.8 4.9	 5.0 5.0	 5.2 5.1	Vdc
Output Voltage Variation (7.0 Vdc ≤ V_I ≤ 20 Vdc, 5.0 mA ≤ I_O ≤ 350 mA) MC78M05B/MC78M05C/NCV78M05B MC78M05AB/MC78M05AC/NCV78M05AB	V_O	 4.75 4.80	 – –	 5.25 5.20	Vdc
Line Regulation (T_J = 25°C, 7.0 Vdc ≤ V_I ≤ 25 Vdc, I_O = 200 mA)	Reg_{line}	–	3.0	50	mV
Load Regulation (T_J = 25°C, 5.0 mA ≤ I_O ≤ 500 mA) (T_J = 25°C, 5.0 mA ≤ I_O ≤ 200 mA)	Reg_{load}	 – –	 20 10	 100 50	mV
Input Bias Current (T_J = 25°C)	I_{IB}	–	3.2	6.0	mA
Quiescent Current Change (8.0 Vdc ≤ V_I ≤ 25 Vdc, I_O = 200 mA) (5.0 mA ≤ I_O ≤ 350 mA)	ΔI_{IB}	 – –	 – –	 0.8 0.5	mA
Output Noise Voltage (T_A = 25°C, 10 Hz ≤ f ≤ 100 kHz)	V_n	–	40	–	μV
Ripple Rejection (I_O = 100 mA, f = 120 Hz, 8.0 V ≤ V_I ≤ 18 V) (I_O = 300 mA, f = 120 Hz, 8.0 ≤ V_I ≤ 18 V, T_J = 25°C)	RR	 62 62	 – 80	 – –	dB
Dropout Voltage (T_J = 25°C)	V_I–V_O	–	2.0	–	Vdc
Short Circuit Current Limit (T_J = 25°C, V_I = 35 V)	I_{OS}	–	350	–	mA
Average Temperature Coefficient of Output Voltage (I_O = 5.0 mA)	$\Delta V_O/\Delta T$	–	±0.2	–	mV/°C
Peak Output Current (T_J = 25°C)	I_O	–	700	–	mA

2. T_{low} = 0°C for MC78MxxAC, C
   = −40°C for MC78MxxAB, B, NCV78MxxAB, B
   T_{high} = +125°C for MC78MxxAB, AC, B, C, NCV78MxxAB, B

MC78M06C/B ELECTRICAL CHARACTERISTICS

(V_I = 11 V, I_O = 350 mA, T_J = T_{low} to T_{high}, $P_D \le$ 5.0 W, unless otherwise noted) (Note 3)

Characteristics	Symbol	Min	Typ	Max	Unit
Output Voltage (T_J = 25°C)	V_O	5.75	6.0	6.25	Vdc
Output Voltage Variation (8.0 Vdc ≤ V_I ≤ 21 Vdc, 5.0 mA ≤ I_O ≤ 350 mA)	V_O	5.7	–	6.3	Vdc
Line Regulation (T_J = 25°C, 8.0 Vdc ≤ V_I ≤ 25 Vdc, I_O = 200 mA)	Reg_{line}	–	5.0	50	mV
Load Regulation (T_J = 25°C, 5.0 mA ≤ I_O ≤ 500 Ma) (T_J = 25°C, 5.0 mA ≤ I_O ≤ 200 mA)	Reg_{load}	 – –	 20 10	 120 60	mV
Input Bias Current (T_J = 25°C)	I_{IB}	–	3.2	6.0	mA
Quiescent Current Change (9.0 Vdc ≤ V_I ≤ 25 Vdc, I_O = 200 mA) (5.0 mA ≤ I_O ≤ 350 mA)	ΔI_{IB}	 – –	 – –	 0.8 0.5	mA
Output Noise Voltage (T_A = 25°C, 10 Hz ≤ f ≤ 100 kHz)	V_n	–	45	–	μV
Ripple Rejection (I_O = 100 mA, f = 120 Hz, 9.0 V ≤ V_I ≤ 19 V) (I_O = 300 mA, f = 120 Hz, 9.0 V ≤ V_I ≤ 19 V, T_J = 25°C)	RR	 59 59	 – 80	 – –	dB
Dropout Voltage (T_J = 25°C)	$V_I - V_O$	–	2.0	–	Vdc
Short Circuit Current Limit (T_J = 25°C, V_I = 35 V)	I_{OS}	–	350	–	mA
Average Temperature Coefficient of Output Voltage (I_O = 5.0 mA)	$\Delta V_O/\Delta T$	–	±0.2	–	mV/°C
Peak Output Current (T_J = 25°C)	I_O	–	700	–	mA

MC78M08C/AC/B/AB, NCV78M08B ELECTRICAL CHARACTERISTICS

(V_I = 14 V, I_O = 350 mA, T_J = T_{low} to T_{high}, $P_D \le$ 5 W, unless otherwise noted) (Note 3)

Characteristics	Symbol	Min	Typ	Max	Unit
Output Voltage (T_J = 25°C) MC78M08B/MC78M08C/NCV78M08B MC78M08AB/MC78M08AC	V_O	 7.70 7.84	 8.0 8.0	 8.30 8.16	Vdc
Output Voltage Variation (10.5 Vdc ≤ V_I ≤ 23 Vdc, 5.0 mA ≤ I_O ≤ 350 mA) MC78M08B/MC78M08C/NCV78M08B MC78M08AB/MC78M08AC	V_O	 7.6 7.7	 – –	 8.4 8.3	Vdc
Line Regulation (T_J = 25°C, 10.5 Vdc ≤ V_I ≤ 25 Vdc, I_O = 200 mA)	Reg_{line}	–	6.0	50	mV
Load Regulation (T_J = 25°C, 5.0 mA ≤ I_O ≤ 500 mA) (T_J = 25°C, 5.0 mA ≤ I_O ≤ 200 mA)	Reg_{load}	 – –	 25 10	 160 80	mV
Input Bias Current (T_J = 25°C)	I_{IB}	–	3.2	6.0	mA
Quiescent Current Change (10.5 Vdc ≤ V_I ≤ 25 Vdc, I_O = 200 mA) (5.0 mA ≤ I_O ≤ 350 mA)	ΔI_{IB}	 – –	 – –	 0.8 0.5	mA
Output Noise Voltage (T_A = 25°C, 10 Hz ≤ f ≤ 100 kHz)	V_n	–	52	–	μV
Ripple Rejection (I_O = 100 mA, f = 120 Hz, 11.5 V ≤V_I ≤ 21.5 V) (I_O = 300 mA, f = 120 Hz, 11.5 V ≤V_I ≤ 21.5 V, T_J = 25°C)	RR	 56 56	 – 80	 – –	dB
Dropout Voltage (T_J = 25°C)	$V_I - V_O$	–	2.0	–	Vdc
Short Circuit Current Limit (T_J = 25°C, V_I = 35 V)	I_{OS}	–	350	–	mA
Average Temperature Coefficient of Output Voltage (I_O = 5.0 mA)	$\Delta V_O/\Delta T$	–	±0.2	–	mV/°C
Peak Output Current (T_J = 25°C)	I_O	–	700	–	mA

3. T_{low} = 0°C for MC78MxxAC, C
   = −40°C for MC78MxxAB, B, NCV78MxxAB, B
   T_{high} = +125°C for MC78MxxAB, AC, B, C, NCV78MxxAB, B

MC78M09C/B, NCV78M09B ELECTRICAL CHARACTERISTICS

(V_I = 15 V, I_O = 350 mA, T_J = T_{low} to T_{high}, $P_D \le$ 5.0 W, unless otherwise noted) (Note 4)

Characteristics	Symbol	Min	Typ	Max	Unit
Output Voltage (T_J = 25°C)	V_O	8.64	9.0	9.45	Vdc
Output Voltage Variation (11.5 Vdc ≤ V_I ≤ 23 Vdc, 5.0 mA ≤ I_O ≤ 350 mA)	V_O	8.55	–	9.45	Vdc
Line Regulation (T_J = 25°C, 11.5 Vdc ≤ V_I ≤ 25 Vdc, I_O = 200 mA)	Reg_{line}	–	6.0	50	mV
Load Regulation (T_J = 25°C, 5.0 mA ≤ I_O ≤ 500 mA) (T_J = 25°C, 5.0 mA ≤ I_O ≤ 200 mA)	Reg_{load}	 – –	 25 10	 180 90	mV
Input Bias Current (T_J = 25°C)	I_{IB}	–	3.2	6.0	mA
Quiescent Current Change (11.5 Vdc ≤ V_I ≤ 25 Vdc, I_O = 200 mA) (5.0 mA ≤ I_O ≤ 350 mA)	ΔI_{IB}	 – –	 – –	 0.8 0.5	mA
Output Noise Voltage (T_A = 25°C, 10 Hz ≤ f ≤ 100 kHz)	V_n	–	52	–	μV
Ripple Rejection (I_O = 100 mA, f = 120 Hz, 12.5 V ≤V_I ≤ 22.5 V) (I_O = 300 mA, f = 120 Hz, 12.5 V ≤V_I ≤ 22.5 V, T_J = 25°C)	RR	 56 56	 – 80	 – –	dB
Dropout Voltage (T_J = 25°C)	V_I–V_O	–	2.0	–	Vdc
Short Circuit Current Limit (T_J = 25°C, V_I = 35 V)	I_{OS}	–	350	–	mA
Average Temperature Coefficient of Output Voltage (I_O = 5.0 mA)	$\Delta V_O/\Delta T$	–	±0.2	–	mV/°C
Peak Output Current (T_J = 25°C)	I_O	–	700	–	mA

MC78M12C/AC/B/AB, NCV78M12B ELECTRICAL CHARACTERISTICS

(V_I = 19 V, I_O = 350 mA, T_J = T_{low} to T_{high}, $P_D \le$ 5 W, unless otherwise noted) (Note 4)

Characteristics	Symbol	Min	Typ	Max	Unit
Output Voltage (T_J = 25°C) MC78M12B/MC78M12C/NCV78M12B MC78M12AB/MC78M12AC	V_O	 11.50 11.76	 12 12	 12.50 12.24	Vdc
Output Voltage Variation (14.5 Vdc ≤ V_I ≤ 27 Vdc, 5.0 mA ≤ I_O ≤ 350 mA) MC78M12B/MC78M12C/NCV78M12B MC78M12AB/MC78M12AC	V_O	 11.4 11.5	 – –	 12.6 12.5	Vdc
Line Regulation (T_J = 25°C, 14.5 Vdc ≤ V_I ≤ 30 Vdc, I_O = 200 mA)	Reg_{line}	–	8.0	50	mV
Load Regulation (T_J = 25°C, 5.0 mA ≤ I_O ≤ 500 mA) (T_J = 25°C, 5.0 mA ≤ I_O ≤ 200 mA)	Reg_{load}	 – –	 25 10	 240 120	mV
Input Bias Current (T_J = 25°C)	I_{IB}	–	3.2	6.0	mA
Quiescent Current Change (14.5 Vdc ≤ V_I ≤ 30 Vdc, I_O = 200 mA) (5.0 mA ≤ I_O ≤ 350 mA)	ΔI_{IB}	 – –	 – –	 0.8 0.5	mA
Output Noise Voltage (T_A = 25°C, 10 Hz ≤ f ≤ 100 kHz)	V_n	–	75	–	μV
Ripple Rejection (I_O = 100 mA, f = 120 Hz, 15 V ≤V_I ≤ 25 V) (I_O = 300 mA, f = 120 Hz, 15 V ≤V_I ≤ 25 V, T_J = 25°C)	RR	 55 55	 – 80	 – –	dB
Dropout Voltage (T_J = 25°C)	V_I–V_O	–	2.0	–	Vdc
Short Circuit Current Limit (T_J = 25°C, V_I = 35 V)	I_{OS}	–	350	–	mA
Average Temperature Coefficient of Output Voltage (I_O = 5.0 mA)	$\Delta V_O/\Delta T$	–	±0.3	–	mV/°C
Peak Output Current (T_J = 25°C)	I_O	–	700	–	mA

4. T_{low} = 0°C for MC78MxxAC, C
   = −40°C for MC78MxxAB, B, NCV78MxxAB, B
   T_{high} = +125°C for MC78MxxAB, AC, B, C, NCV78MxxAB, B

MC78M15C/AC/B/AB, NCV78M15B ELECTRICAL CHARACTERISTICS

(V_I = 23 V, I_O = 350 mA, T_J = T_{low} to T_{high}, $P_D \le$ 5 W, unless otherwise noted) (Note 5)

Characteristics	Symbol	Min	Typ	Max	Unit
Output Voltage (T_J = 25°C) MC78M15B/MC78M15C/NCV78M15B MC78M15AB/MC78M15AC	V_O	 14.4 14.7	 15 15	 15.6 15.3	Vdc
Output Voltage Variation (17.5 Vdc ≤ V_I ≤ 30 Vdc, 5.0 mA ≤ I_O ≤ 350 mA) MC78M15B/MC78M15C/NCV78M15B MC78M15AB/MC78M15AC	V_O	 14.25 14.40	 – –	 15.75 15.60	Vdc
Input Regulation (T_J = 25°C, 17.5 Vdc ≤ V_I ≤ 30 Vdc, I_O = 200 mA)	Reg_{line}	–	10	50	mV
Load Regulation (T_J = 25°C, 5.0 mA ≤ I_O ≤ 500 mA) (T_J = 25°C, 5.0 mA ≤ I_O ≤ 200 mA)	Reg_{load}	 – –	 25 10	 300 150	mV
Input Bias Current (T_J = 25°C)	I_{IB}	–	3.2	6.0	mA
Quiescent Current Change (17.5 Vdc ≤ V_I ≤ 30 Vdc, I_O = 200 mA) (5.0 mA ≤ I_O ≤ 350 mA)	ΔI_{IB}	 – –	 – –	 0.8 0.5	mA
Output Noise Voltage (T_A = 25°C, 10 Hz ≤ f ≤ 100 kHz)	V_n	–	90	–	μV
Ripple Rejection (I_O = 100 mA, f = 120 Hz, 18.5 V ≤ V_I ≤ 28.5 V) (I_O = 300 mA, f = 120 Hz, 18.5 V ≤ V_I ≤ 28.5 V, T_J = 25°C)	RR	 54 54	 – 70	 – –	dB
Dropout Voltage (T_J = 25°C)	V_I–V_O	–	2.0	–	Vdc
Short Circuit Current Limit (T_J = 25°C, V_I = 35 V)	I_{OS}	–	350	–	mA
Average Temperature Coefficient of Output Voltage (I_O = 5.0 mA)	$\Delta V_O/\Delta T$	–	±0.3	–	mV/°C
Peak Output Current (T_J = 25°C)	I_O	–	700	–	mA

MC78M18C/B ELECTRICAL CHARACTERISTICS

(V_I = 27 V, I_O = 350 mA, T_J = T_{low} to T_{high}, $P_D \le$ 5 W, unless otherwise noted) (Note 5)

Characteristics	Symbol	Min	Typ	Max	Unit
Output Voltage (T_J = 25°C)	V_O	17.3	18	18.7	Vdc
Output Voltage Variation (21 Vdc ≤ V_I ≤ 33 Vdc, 5.0 mA ≤ I_O ≤ 350 mA)	V_O	17.1	–	18.9	Vdc
Line Regulation (T_J = 25°C, 21 Vdc ≤ V_I ≤ 33 Vdc, I_O = 200 mA)	Reg_{line}	–	10	50	mV
Load Regulation (T_J = 25°C, 5.0 mA ≤ I_O ≤ 500 mA) (T_J = 25°C, 5.0 mA ≤ I_O ≤ 200 mA)	Reg_{load}	 – –	 30 10	 360 180	mV
Input Bias Current (T_J = 25°C)	I_{IB}	–	3.2	6.5	mA
Quiescent Current Change (21 Vdc ≤ V_I ≤ 33 Vdc, I_O = 200 mA) (5.0 mA ≤ I_O ≤ 350 mA)	ΔI_{IB}	 – –	 – –	 0.8 0.5	mA
Output Noise Voltage (T_A = 25°C, 10 Hz ≤ f ≤ 100 kHz)	V_n	–	100	–	μV
Ripple Rejection (I_O = 100 mA, f = 120 Hz, 22 V ≤ V_I ≤ 32 V) (I_O = 300 mA, f = 120 Hz, 22 V ≤ V_I ≤ 32 V, T_J = 25°C)	RR	 53 53	 – 70	 – –	dB
Dropout Voltage (T_J = 25°C)	V_I–V_O	–	2.0	–	Vdc
Short Circuit Current Limit (T_J = 25°C, V_I = 35 V)	I_{OS}	–	350	–	mA
Average Temperature Coefficient of Output Voltage (I_O = 5.0 mA)	$\Delta V_O/\Delta T$	–	±0.3	–	mV/°C
Peak Output Current (T_J = 25°C)	I_O	–	700	–	mA

5. T_{low} = 0°C for MC78MxxAC, C
   = −40°C for MC78MxxAB, B, NCV78MxxAB, B
   T_{high} = +125°C for MC78MxxAB, AC, B, C, NCV78MxxAB, B

MC78M20C/B ELECTRICAL CHARACTERISTICS

(V_I = 29 V, I_O = 350 mA, T_J = T_{low} to T_{high}, $P_D \le$ 5.0 W, unless otherwise noted) (Note 6)

Characteristics	Symbol	Min	Typ	Max	Unit
Output Voltage (T_J = 25°C)	V_O	19.2	20	20.8	Vdc
Output Voltage Variation (23 Vdc ≤ V_I ≤ 35 Vdc, 5.0 mA ≤ I_O ≤ 350 mA)	V_O	19	–	21	Vdc
Line Regulation (T_J = 25°C, 23 Vdc ≤ V_I ≤ 35 Vdc, I_O = 200 mA)	Reg_{line}	–	10	50	mV
Load Regulation (T_J = 25°C, 5.0 mA ≤ I_O ≤ 500 mA) (T_J = 25°C, 5.0 mA ≤ I_O ≤ 200 mA)	Reg_{load}	 – –	 30 10	 400 200	mV
Input Bias Current (T_J = 25°C)	I_{IB}	–	3.2	6.5	mA
Quiescent Current Change (23 Vdc ≤ V_I ≤ 35 Vdc, I_O = 200 mA) (5.0 mA ≤ I_O ≤ 350 mA)	ΔI_{IB}	 – –	 – –	 0.8 0.5	mA
Output Noise Voltage (T_A = 25°C, 10 Hz ≤ f ≤ 100 kHz)	V_n	–	110	–	μV
Ripple Rejection (I_O = 100 mA, f = 120 Hz, 24 V ≤ V_I ≤ 34 V) (I_O = 300 mA, f = 120 Hz, 24 V ≤ V_I ≤ 34 V, T_J = 25°C)	RR	 52 52	 – 70	 – –	dB
Dropout Voltage (T_J = 25°C)	V_I–V_O	–	2.0	–	Vdc
Short Circuit Current Limit (T_J = 25°C, V_I = 35 V)	I_{OS}	–	350	–	mA
Average Temperature Coefficient of Output Voltage (I_O = 5.0 mA)	$\Delta V_O/\Delta T$	–	±0.5	–	mV/°C
Peak Output Current (T_J = 25°C)	I_O	–	700	–	mA

MC78M24C/B ELECTRICAL CHARACTERISTICS

(V_I = 33 V, I_O = 350 mA, T_J = T_{low} to T_{high}, $P_D \le$ 5.0 W, unless otherwise noted) (Note 6)

Characteristics	Symbol	Min	Typ	Max	Unit
Output Voltage (T_J = 25°C)	V_O	23	24	25	Vdc
Output Voltage Variation (27 Vdc ≤ V_I ≤ 38 Vdc, 5.0 mA ≤ I_O ≤ 350 mA)	V_O	22.8	–	25.2	Vdc
Line Regulation (T_J = 25°C, 27 Vdc ≤ V_I ≤ 38 Vdc, I_O = 200 mA)	Reg_{line}	–	10	50	mV
Load Regulation (T_J = 25°C, 5.0 mA ≤ I_O ≤ 500 mA) (T_J = 25°C, 5.0 mA ≤ I_O ≤ 200 mA)	Reg_{load}	 – –	 30 10	 480 240	mV
Input Bias Current (T_J = 25°C)	I_{IB}	–	3.2	7.0	mA
Quiescent Current Change (27 Vdc ≤ V_I ≤ 38 Vdc, I_O = 200 mA) (5.0 mA ≤ I_O ≤ 350 mA)	ΔI_{IB}	 – –	 – –	 0.8 0.5	mA
Output Noise Voltage (T_A = 25°C, 10 Hz ≤ f ≤ 100 kHz)	V_n	–	170	–	μV
Ripple Rejection (I_O = 100 mA, f = 120 Hz, 28 V ≤ V_I ≤ 38 V) (I_O = 300 mA, f = 120 Hz, 28 V ≤ V_I ≤ 38 V, T_J = 25°C)	RR	 50 50	 – 70	 – –	dB
Dropout Voltage (T_J = 25°C)	V_I–V_O	–	2.0	–	Vdc
Short Circuit Current Limit (T_J = 25°C)	I_{OS}	–	350	–	mA
Average Temperature Coefficient of Output Voltage (I_O = 5.0 mA)	$\Delta V_O/\Delta T$	–	±0.5	–	mV/°C
Peak Output Current (T_J = 25°C)	I_O	–	700	–	mA

6. T_{low} = 0°C for MC78MxxAC, C
   = −40°C for MC78MxxAB, B
   T_{high} = +125°C for MC78MxxAB, AC, B, C

DEFINITIONS

Line Regulation – The change in output voltage for a change in the input voltage. The measurement is made under conditions of low dissipation or by using pulse techniques such that the average chip temperature is not significantly affected.

Load Regulation – The change in output voltage for a change in load current at constant chip temperature.

Maximum Power Dissipation – The maximum total device dissipation for which the regulator will operate within specifications.

Input Bias Current – That part of the input current that is not delivered to the load.

Output Noise Voltage – The rms AC voltage at the output, with constant load and no input ripple, measured over a specified frequency range.

Long Term Stability – Output voltage stability under accelerated life test conditions with the maximum rated voltage listed in the devices' electrical characteristics and maximum power dissipation.

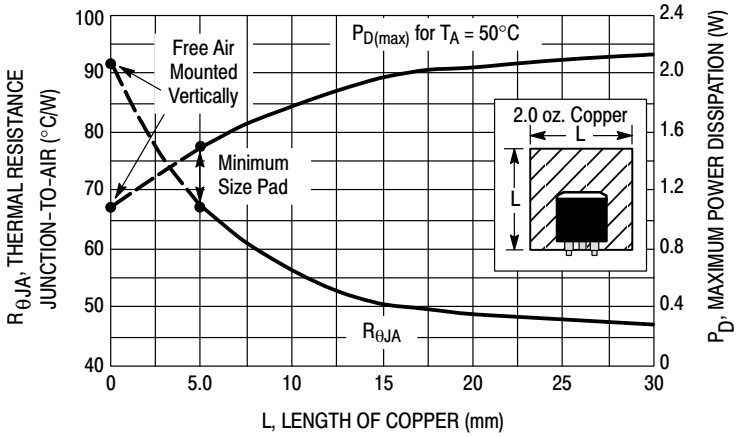

Figure 2. DPAK Thermal Resistance and Maximum Power Dissipation versus P.C.B. Copper Length

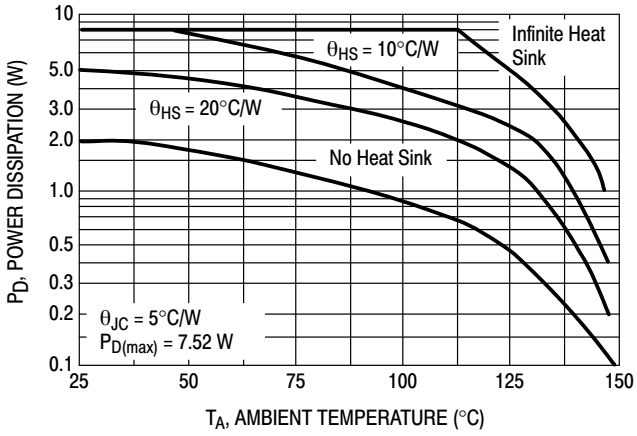

Figure 3. Worst Case Power Dissipation versus Ambient Temperature (TO−220)

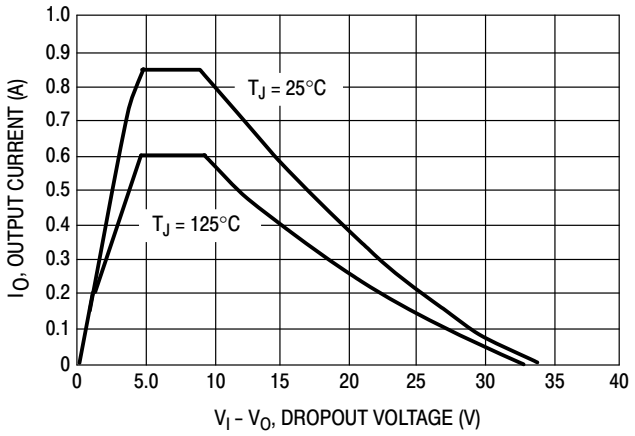

Figure 4. Peak Output Current versus Dropout Voltage

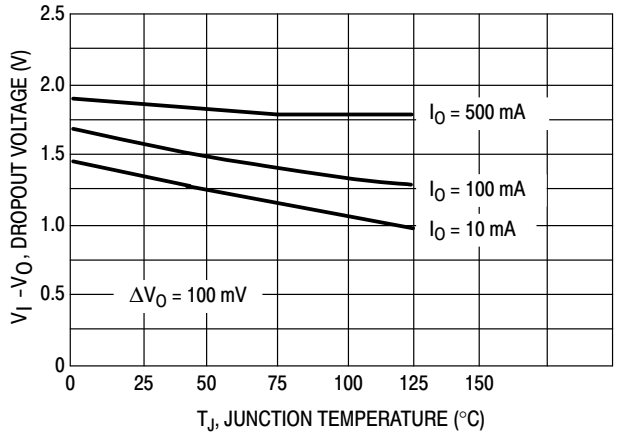

Figure 5. Dropout Voltage versus Junction Temperature

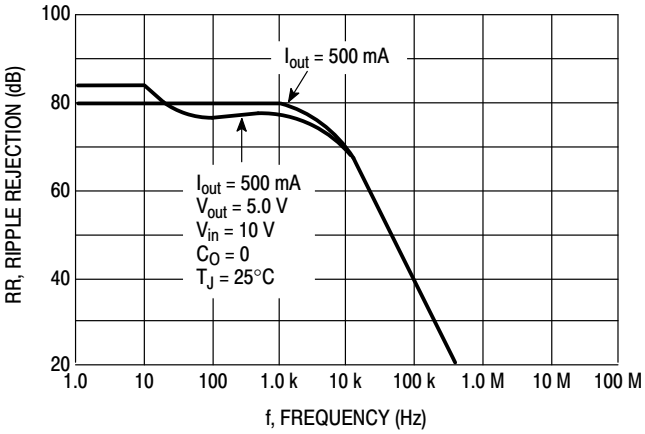

Figure 6. Ripple Rejection versus Frequency

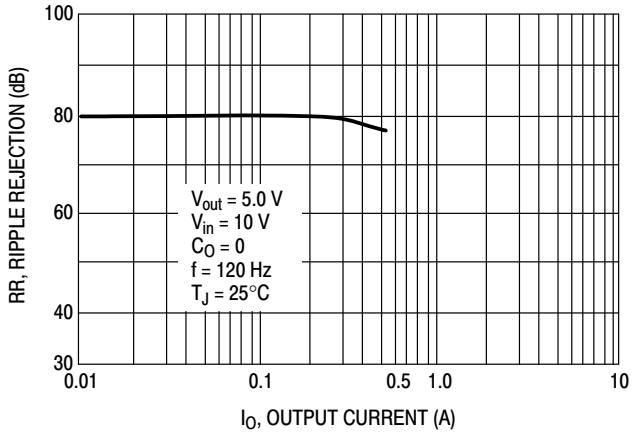

Figure 7. Ripple Rejection versus Output Current

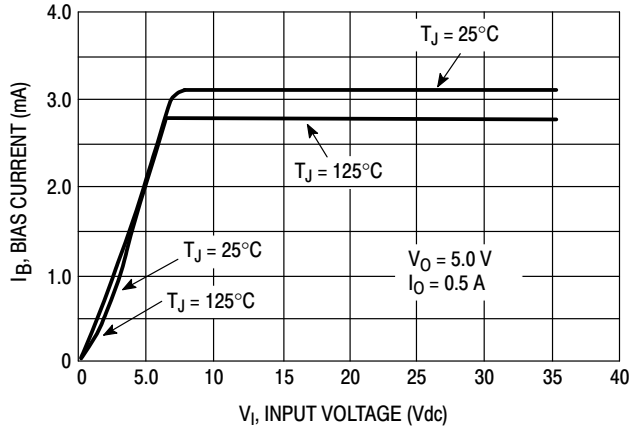

Figure 8. Bias Current versus Input Voltage

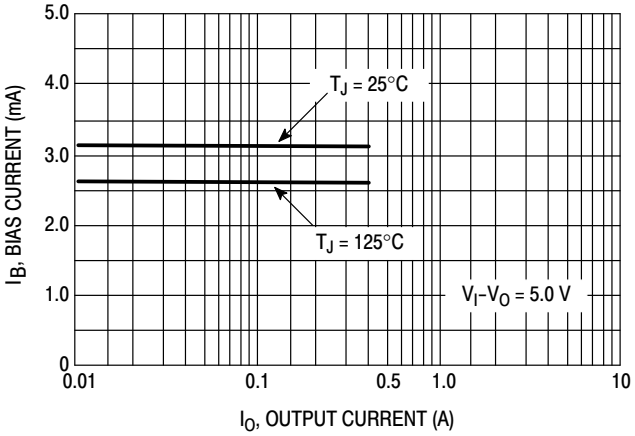

Figure 9. Bias Current versus Output Current

APPLICATIONS INFORMATION

Design Considerations

The MC78M00/MC78M00A Series of fixed voltage regulators are designed with Thermal Overload Protection that shuts down the circuit when subjected to an excessive power overload condition, Internal Short Circuit Protection that limits the maximum current the circuit will pass, and Output Transistor Safe−Area Compensation that reduces the output short circuit current as the voltage across the pass transistor is increased.

In many low current applications, compensation capacitors are not required. However, it is recommended that the regulator input be bypassed with a capacitor if the regulator is connected to the power supply filter with long wire lengths, or if the output load capacitance is large. An input bypass capacitor should be selected to provide good high frequency characteristics to insure stable operation under all load conditions. A 0.33 μF or larger tantalum, mylar, or other capacitor having low internal impedance at high frequencies should be chosen. The bypass capacitor should be mounted with the shortest possible leads directly across the regulator's input terminals. Normally good construction techniques should be used to minimize ground loops and lead resistance drops since the regulator has no external sense lead.

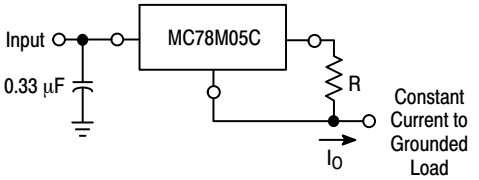

The MC78M00 regulators can also be used as a current source when connected as above. In order to minimize dissipation the MC78M05C is chosen in this application. Resistor R determines the current as follows:

$$I_O = \frac{5.0\ V}{R} + I_{IB}$$

I_{IB} = 1.5 mA over line and load changes.

For example, a 500 mA current source would require R to be a 10 Ω, 10 W resistor and the output voltage compliance would be the input voltage less 7.0 V.

Figure 10. Current Regulator

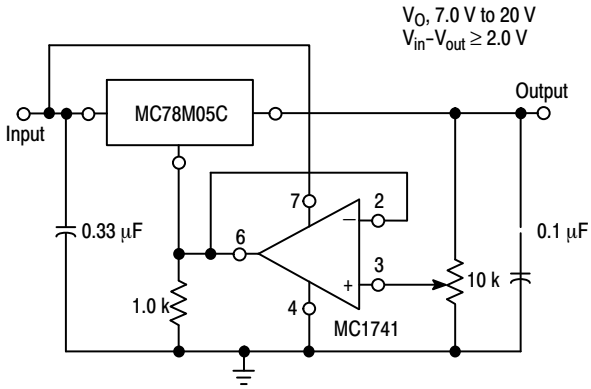

The addition of an operational amplifier allows adjustment to higher or intermediate values while retaining regulation characteristics. The minimum voltage obtainable with this arrangement is 2.0 V greater than the regulator voltage.

Figure 11. Adjustable Output Regulator

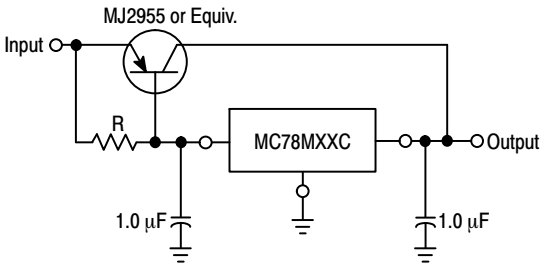

XX = 2 digits of type number indicating voltage.

The MC78M00 series can be current boosted with a PNP transistor. The MJ2955 provides current to 5.0 A. Resistor R in conjunction with the V_{BE} of the PNP determines when the pass transistor begins conducting; this circuit is not short circuit proof. Input−output differential voltage minimum is increased by V_{BE} of the pass transistor.

Figure 12. Current Boost Regulator

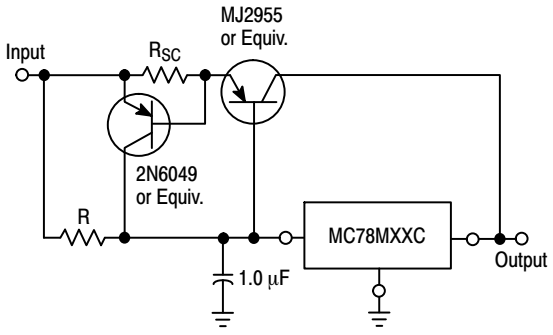

XX = 2 digits of type number indicating voltage.

The circuit of Figure 12 can be modified to provide supply protection against short circuits by adding a short circuit sense resistor, R_{sc}, and an additional PNP transistor. The current sensing PNP must be able to handle the short circuit current of the three−terminal regulator .Therefore, a 4.0 A plastic power transistor is specified.

Figure 13. Current Boost with Short Circuit Protection

ORDERING INFORMATION

Device	Output Voltage	Temperature Range	Package	Marking	Shipping†
MC78M05CDTG	5.0 V	T_J = 0° to +125°C	DPAK−3 (Pb−Free)	78M05	75 Units / Rail
MC78M05CDTRKG	5.0 V	T_J = 0° to +125°C	DPAK−3 (Pb−Free)	78M05	2500 / Tape & Reel
MC78M05ACDTRKG	5.0 V	T_J = 0° to +125°C	DPAK−3 (Pb−Free)	8M05D	2500 / Tape & Reel
MC78M05CTG	5.0 V	T_J = 0° to +125°C	TO−220 (Pb−Free)	78M05CT	50 Units / Rail
MC78M05ABDTG	5.0 V	T_J = −40° to +125°C	DPAK−3 (Pb−Free)	8M05A	75 Units / Rail
MC78M05ABDTRKG	5.0 V	T_J = −40° to +125°C	DPAK−3 (Pb−Free)	8M05A	2500 / Tape & Reel
NCV78M05ABDTRKG*	5.0 V	T_J = −40° to +125°C	DPAK−3 (Pb−Free)	8M05A	2500 / Tape & Reel
MC78M05BDTG	5.0 V	T_J = −40° to +125°C	DPAK−3 (Pb−Free)	8M05B	75 Units / Rail
MC78M05BDTRKG	5.0 V	T_J = −40° to +125°C	DPAK−3 (Pb−Free)	8M05B	2500 / Tape & Reel
NCV78M05BDTRKG*	5.0 V	T_J = −40° to +125°C	DPAK−3 (Pb−Free)	8M05B	2500 / Tape & Reel
MC78M05BTG	5.0 V	T_J = −40° to +125°C	TO−220 (Pb−Free)	78M05BT	50 Units / Rail
NCV78M05BTG*	5.0 V	T_J = −40° to +125°C	TO−220 (Pb−Free)	78M05BT	50 Units / Rail
MC78M06CDTRKG	6.0 V	T_J = 0° to +125°C	DPAK−3 (Pb−Free)	78M06	2500 / Tape & Reel
MC78M08CDTRKG	8.0 V	T_J = 0° to +125°C	DPAK−3 (Pb−Free)	78M08	2500 Units / Tape & Reel
MC78M08BDTRKG	8.0 V	T_J = −40° to +125°C	DPAK−3 (Pb−Free)	8M08B	2500 Units / Tape & Reel
NCV78M08BDTRKG*	8.0 V	T_J = −40° to +125°C	DPAK−3 (Pb−Free)	8M08B	2500 Units / Tape & Reel
MC78M09CDTRKG	9.0 V	T_J = 0° to +125°C	DPAK−3 (Pb−Free)	78M09	2500 Units / Tape & Reel
MC78M09BDTRKG	9.0 V	T_J = −40° to +125°C	DPAK−3 (Pb−Free)	8M09B	2500 Units / Tape & Reel
NCV78M09BDTRKG*	9.0 V	T_J = −40° to +125°C	DPAK−3 (Pb−Free)	8M09B	2500 Units / Tape & Reel
MC78M12CDTG	12 V	T_J = 0° to +125°C	DPAK−3 (Pb−Free)	78M12	75 Units / Rail
MC78M12CDTRKG	12 V	T_J = 0° to +125°C	DPAK−3 (Pb−Free)	78M12	2500 Units / Tape & Reel
MC78M12ACDTRKG	12 V	T_J = 0° to +125°C	DPAK−3 (Pb−Free)	8M12D	2500 Units / Tape & Reel
MC78M12CTG	12 V	T_J = 0° to +125°C	TO−220 (Pb−Free)	78M12CT	50 Units / Rail

†For information on tape and reel specifications, including part orientation and tape sizes, please refer to our Tape and Reel Packaging Specifications Brochure, BRD8011/D.

*NCV devices: T_{low} = −40°C, T_{high} = +125°C. Guaranteed by design. NCV Prefix for Automotive and Other Applications Requiring Unique Site and Control Change Requirements; AEC−Q100 Qualified and PPAP Capable.

ORDERING INFORMATION (continued)

Device	Output Voltage	Temperature Range	Package	Marking	Shipping†
MC78M12ABDTRKG	12 V	T_J = −40° to +125°C	DPAK−3 (Pb−Free)	8M12A	2500 Units / Tape & Reel
MC78M12BDTG	12 V	T_J = −40° to +125°C	DPAK−3 (Pb−Free)	8M12B	75 Units / Rail
MC78M12BDTRKG	12 V	T_J = −40° to +125°C	DPAK−3 (Pb−Free)	8M12B	2500 Units / Tape & Reel
NCV78M12BDTRKG*	12 V	T_J = −40° to +125°C	DPAK−3 (Pb−Free)	8M12B	2500 Units / Tape & Reel
MC78M12BTG	12 V	T_J = −40° to +125°C	TO−220 (Pb−Free)	78M12BT	50 Units / Rail
MC78M15CDTG	15 V	T_J = 0° to +125°C	DPAK−3 (Pb−Free)	78M15	75 Units / Rail
MC78M15CDTRKG	15 V	T_J = 0° to +125°C	DPAK−3 (Pb−Free)	78M15	2500 Units / Tape & Reel
MC78M15ACDTRKG	15 V	T_J = 0° to +125°C	DPAK−3 (Pb−Free)	8M15D	2500 Units / Tape & Reel
MC78M15CTG	15 V	T_J = 0° to +125°C	TO−220 (Pb−Free)	78M15CT	50 Units / Rail
MC78M15ABDTRKG	15 V	T_J = −40° to +125°C	DPAK−3 (Pb−Free)	8M15A	2500 Units / Tape & Reel
NCV78M15BDTG*	15 V	T_J = −40° to +125°C	DPAK−3 (Pb−Free)	8M15B	75 Units / Rail
MC78M15BDTRKG	15 V	T_J = −40° to +125°C	DPAK−3 (Pb−Free)	8M15B	2500 Units / Tape & Reel
NCV78M15BDTRKG*	15 V	T_J = −40° to +125°C	DPAK−3 (Pb−Free)	8M15B	2500 Units / Tape & Reel
MC78M18CDTRKG	18 V	T_J = 0° to +125°C	DPAK−3 (Pb−Free)	78M18	2500 Units / Tape & Reel

†For information on tape and reel specifications, including part orientation and tape sizes, please refer to our Tape and Reel Packaging Specifications Brochure, BRD8011/D.

*NCV devices: T_{low} = −40°C, T_{high} = +125°C. Guaranteed by design. NCV Prefix for Automotive and Other Applications Requiring Unique Site and Control Change Requirements; AEC−Q100 Qualified and PPAP Capable.

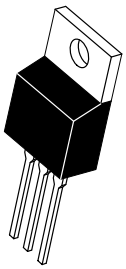

SCALE 1:1

TO−220, SINGLE GAUGE
CASE 221AB−01
ISSUE A

DATE 16 NOV 2010

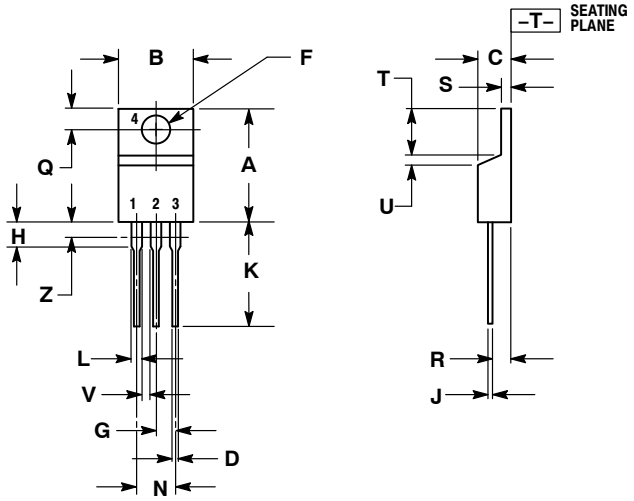

NOTES:
1. DIMENSIONING AND TOLERANCING PER ANSI Y14.5M, 1982.
2. CONTROLLING DIMENSION: INCHES.
3. DIMENSION Z DEFINES A ZONE WHERE ALL BODY AND LEAD IRREGULARITIES ARE ALLOWED.
4. PRODUCT SHIPPED PRIOR TO 2008 HAD DIMENSIONS S = 0.045 − 0.055 INCHES (1.143 − 1.397 MM)

	INCHES		MILLIMETERS	
DIM	MIN	MAX	MIN	MAX
A	0.570	0.620	14.48	15.75
B	0.380	0.405	9.66	10.28
C	0.160	0.190	4.07	4.82
D	0.025	0.035	0.64	0.88
F	0.142	0.147	3.61	3.73
G	0.095	0.105	2.42	2.66
H	0.110	0.155	2.80	3.93
J	0.018	0.025	0.46	0.64
K	0.500	0.562	12.70	14.27
L	0.045	0.060	1.15	1.52
N	0.190	0.210	4.83	5.33
Q	0.100	0.120	2.54	3.04
R	0.080	0.110	2.04	2.79
S	0.020	0.024	0.508	0.61
T	0.235	0.255	5.97	6.47
U	0.000	0.050	0.00	1.27
V	0.045	---	1.15	---
Z	---	0.080	---	2.04

STYLE 1:
PIN 1. BASE
2. COLLECTOR
3. EMITTER
4. COLLECTOR

STYLE 2:
PIN 1. BASE
2. EMITTER
3. COLLECTOR
4. EMITTER

STYLE 3:
PIN 1. CATHODE
2. ANODE
3. GATE
4. ANODE

STYLE 4:
PIN 1. MAIN TERMINAL 1
2. MAIN TERMINAL 2
3. GATE
4. MAIN TERMINAL 2

STYLE 5:
PIN 1. GATE
2. DRAIN
3. SOURCE
4. DRAIN

STYLE 6:
PIN 1. ANODE
2. CATHODE
3. ANODE
4. CATHODE

STYLE 7:
PIN 1. CATHODE
2. ANODE
3. CATHODE
4. ANODE

STYLE 8:
PIN 1. CATHODE
2. ANODE
3. EXTERNAL TRIP/DELAY
4. ANODE

STYLE 9:
PIN 1. GATE
2. COLLECTOR
3. EMITTER
4. COLLECTOR

STYLE 10:
PIN 1. GATE
2. SOURCE
3. DRAIN
4. SOURCE

STYLE 11:
PIN 1. DRAIN
2. SOURCE
3. GATE
4. SOURCE

ON Semiconductor and ON are trademarks of Semiconductor Components Industries, LLC dba ON Semiconductor or its subsidiaries in the United States and/or other countries. ON Semiconductor reserves the right to make changes without further notice to any products herein. ON Semiconductor makes no warranty, representation or guarantee regarding the suitability of its products for any particular purpose, nor does ON Semiconductor assume any liability arising out of the application or use of any product or circuit, and specifically disclaims any and all liability, including without limitation special, consequential or incidental damages. ON Semiconductor does not convey any license under its patent rights nor the rights of others.

© Semiconductor Components Industries, LLC, 2019

MECHANICAL CASE OUTLINE
PACKAGE DIMENSIONS

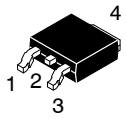

DPAK (SINGLE GAUGE)
CASE 369C
ISSUE G

DATE 31 MAY 2023

SCALE 1:1

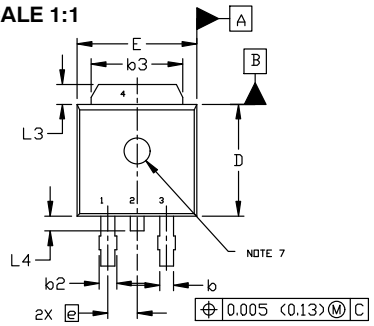

TOP VIEW

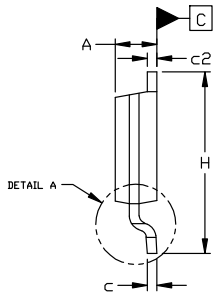

SIDE VIEW

NOTES:

1. DIMENSIONING AND TOLERANCING ASME Y14.5M, 1994.
2. CONTROLLING DIMENSION: INCHES
3. THERMAL PAD CONTOUR OPTIONAL WITHIN DIMENSIONS b3, L3, AND Z.
4. DIMENSIONS D AND E DO NOT INCLUDE MOLD FLASH, PROTRUSIONS, OR BURRS. MOLD FLASH, PROTRUSIONS, OR GATE BURRS SHALL NOT EXCEED 0.006 INCHES PER SIDE.
5. DIMENSIONS D AND E ARE DETERMINED AT THE OUTERMOST EXTREMES OF THE PLASTIC BODY.
6. DATUMS A AND B ARE DETERMINED AT DATUM PLANE H.
7. OPTIONAL MOLD FEATURE.

DIM	INCHES		MILLIMETERS	
	MIN.	MAX.	MIN.	MAX.
A	0.086	0.094	2.18	2.38
A1	0.000	0.005	0.00	0.13
b	0.025	0.035	0.63	0.89
b2	0.028	0.045	0.72	1.14
b3	0.180	0.215	4.57	5.46
c	0.018	0.024	0.46	0.61
c2	0.018	0.024	0.46	0.61
D	0.235	0.245	5.97	6.22
E	0.250	0.265	6.35	6.73
e	0.090 BSC		2.29 BSC	
H	0.370	0.410	9.40	10.41
L	0.055	0.070	1.40	1.78
L1	0.114 REF		2.90 REF	
L2	0.020 BSC		0.51 BSC	
L3	0.035	0.050	0.89	1.27
L4	----	0.040	---	1.01
Z	0.155	----	3.93	---

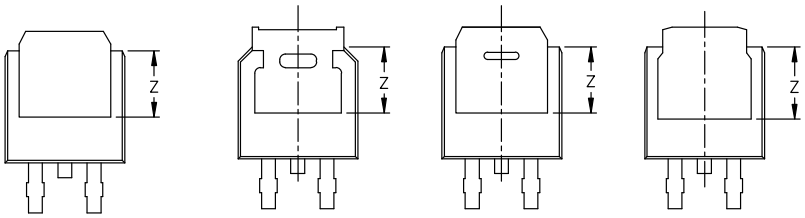

BOTTOM VIEW

BOTTOM VIEW

ALTERNATE CONSTRUCTIONS

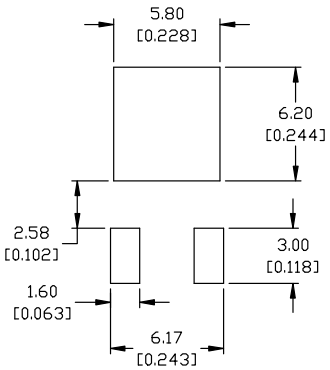

RECOMMENDED MOUNTING FOOTPRINT*

*FOR ADDITIONAL INFORMATION ON OUR PB-FREE STRATEGY AND SOLDERING DETAILS, PLEASE DOWNLOAD THE ON SEMICONDUCTOR SOLDERING AND MOUNTING TECHNIQUES REFERENCE MANUAL, SOLDERRM/D.

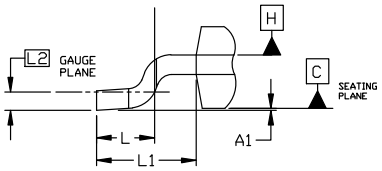

DETAIL A
ROTATED 90° CW

GENERIC MARKING DIAGRAM*

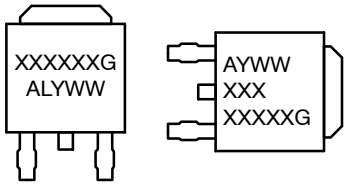

IC **Discrete**

XXXXXX = Device Code
A = Assembly Location
L = Wafer Lot
Y = Year
WW = Work Week
G = Pb−Free Package

*This information is generic. Please refer to device data sheet for actual part marking. Pb−Free indicator, "G" or microdot "▪", may or may not be present. Some products may not follow the Generic Marking.

STYLE 1:
PIN 1. BASE
2. COLLECTOR
3. EMITTER
4. COLLECTOR

STYLE 2:
PIN 1. GATE
2. DRAIN
3. SOURCE
4. DRAIN

STYLE 3:
PIN 1. ANODE
2. CATHODE
3. ANODE
4. CATHODE

STYLE 4:
PIN 1. CATHODE
2. ANODE
3. GATE
4. ANODE

STYLE 5:
PIN 1. GATE
2. ANODE
3. CATHODE
4. ANODE

STYLE 6:
PIN 1. MT1
2. MT2
3. GATE
4. MT2

STYLE 7:
PIN 1. GATE
2. COLLECTOR
3. EMITTER
4. COLLECTOR

STYLE 8:
PIN 1. N/C
2. CATHODE
3. ANODE
4. CATHODE

STYLE 9:
PIN 1. ANODE
2. CATHODE
3. RESISTOR ADJUST
4. CATHODE

STYLE 10:
PIN 1. CATHODE
2. ANODE
3. CATHODE
4. ANODE

DOCUMENT NUMBER:	**98AON10527D**	Electronic versions are uncontrolled except when accessed directly from the Document Repository. Printed versions are uncontrolled except when stamped "CONTROLLED COPY" in red.
DESCRIPTION:	**DPAK (SINGLE GAUGE)**	**PAGE 1 OF 1**

onsemi and onsemi are trademarks of Semiconductor Components Industries, LLC dba **onsemi** or its subsidiaries in the United States and/or other countries. **onsemi** reserves the right to make changes without further notice to any products herein. **onsemi** makes no warranty, representation or guarantee regarding the suitability of its products for any particular purpose, nor does **onsemi** assume any liability arising out of the application or use of any product or circuit, and specifically disclaims any and all liability, including without limitation special, consequential or incidental damages. **onsemi** does not convey any license under its patent rights nor the rights of others.

© Semiconductor Components Industries, LLC, 2018

onsemi, , and other names, marks, and brands are registered and/or common law trademarks of Semiconductor Components Industries, LLC dba "**onsemi**" or its affiliates and/or subsidiaries in the United States and/or other countries. **onsemi** owns the rights to a number of patents, trademarks, copyrights, trade secrets, and other intellectual property. A listing of **onsemi**'s product/patent coverage may be accessed at www.onsemi.com/site/pdf/Patent−Marking.pdf. **onsemi** reserves the right to make changes at any time to any products or information herein, without notice. The information herein is provided "as−is" and **onsemi** makes no warranty, representation or guarantee regarding the accuracy of the information, product features, availability, functionality, or suitability of its products for any particular purpose, nor does **onsemi** assume any liability arising out of the application or use of any product or circuit, and specifically disclaims any and all liability, including without limitation special, consequential or incidental damages. Buyer is responsible for its products and applications using **onsemi** products, including compliance with all laws, regulations and safety requirements or standards, regardless of any support or applications information provided by **onsemi**. "Typical" parameters which may be provided in **onsemi** data sheets and/or specifications can and do vary in different applications and actual performance may vary over time. All operating parameters, including "Typicals" must be validated for each customer application by customer's technical experts. **onsemi** does not convey any license under any of its intellectual property rights nor the rights of others. **onsemi** products are not designed, intended, or authorized for use as a critical component in life support systems or any FDA Class 3 medical devices or medical devices with a same or similar classification in a foreign jurisdiction or any devices intended for implantation in the human body. Should Buyer purchase or use **onsemi** products for any such unintended or unauthorized application, Buyer shall indemnify and hold **onsemi** and its officers, employees, subsidiaries, affiliates, and distributors harmless against all claims, costs, damages, and expenses, and reasonable attorney fees arising out of, directly or indirectly, any claim of personal injury or death associated with such unintended or unauthorized use, even if such claim alleges that **onsemi** was negligent regarding the design or manufacture of the part. **onsemi** is an Equal Opportunity/Affirmative Action Employer. This literature is subject to all applicable copyright laws and is not for resale in any manner.

ADDITIONAL INFORMATION

TECHNICAL PUBLICATIONS:
Technical Library: www.onsemi.com/design/resources/technical−documentation
onsemi Website: www.onsemi.com

ONLINE SUPPORT: www.onsemi.com/support
For additional information, please contact your local Sales Representative at www.onsemi.com/support/sales