Schottky Barrier Diodes

MBD101G, MMBD101LT1G

Designed primarily for UHF mixer applications but suitable also for use in detector and ultra−fast switching circuits. Supplied in an inexpensive plastic package for low−cost, high−volume consumer requirements. Also available in Surface Mount package.

Features

- Low Noise Figure − 6.0 dB Typ @ 1.0 GHz
- Very Low Capacitance − Less Than 1.0 pF
- High Forward Conductance − 0.5 V (Typ) @ I_F = 10 mA
- These Devices are Pb−Free and are RoHS Compliant

MAXIMUM RATINGS

Rating	Symbol	Value	Unit
Reverse Voltage	V_R	7.0	V
Forward Power Dissipation T_A = 25°C MBD101 MMBD101LT1	P_F	 280 225	mW
Derate above 25°C MBD101 MMBD101LT1		2.2 1.8	mW/°C
Junction Temperature	T_J	+150	°C
Storage Temperature Range	T_{stg}	−55 to +150	°C

Stresses exceeding those listed in the Maximum Ratings table may damage the device. If any of these limits are exceeded, device functionality should not be assumed, damage may occur and reliability may be affected.

ELECTRICAL CHARACTERISTICS (T_A = 25°C unless otherwise noted)

Characteristic	Symbol	Min	Typ	Max	Unit
Reverse Breakdown Voltage (I_R = 10 μA)	$V_{(BR)R}$	7.0	10	−	V
Diode Capacitance (V_R = 0, f = 1.0 MHz, Note 1, page 2)	C_D	−	0.88	1.0	pF
Forward Voltage (I_F = 10 mA)	V_F	−	0.5	0.6	V
Reverse Leakage (V_R = 3.0 V)	I_R	−	0.02	0.25	μA

Product parametric performance is indicated in the Electrical Characteristics for the listed test conditions, unless otherwise noted. Product performance may not be indicated by the Electrical Characteristics if operated under different conditions.

SILICON SCHOTTKY BARRIER DIODES

MARKING DIAGRAMS

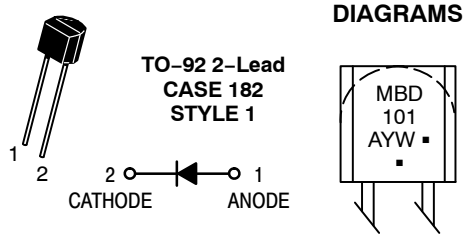

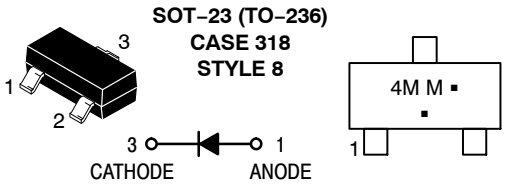

(Pin 2 Not Connected)

A = Assembly Location
Y = Year
W = Work Week
4M = Device Code (SOT−23)
M = Date Code*
▪ = Pb−Free Package

(Note: Microdot may be in either location)
*Date Code orientation and/or overbar may vary depending upon manufacturing location.

ORDERING INFORMATION

Device	Package	Shipping†
MBD101G	TO−92 (Pb−Free)	5000 Units / Box
MMBD101LT1G	SOT−23 (Pb−Free)	3000 / Tape & Reel

†For information on tape and reel specifications, including part orientation and tape sizes, please refer to our Tape and Reel Packaging Specifications Brochure, BRD8011/D.

© Semiconductor Components Industries, LLC, 1994

TYPICAL CHARACTERISTICS

(T_A = 25°C unless noted)

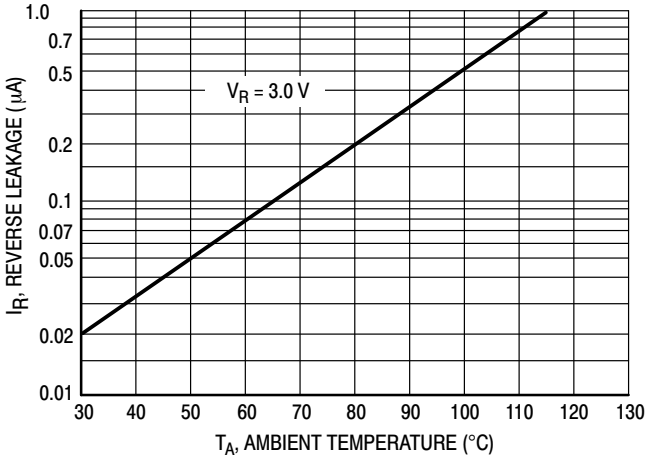

Figure 1. Reverse Leakage

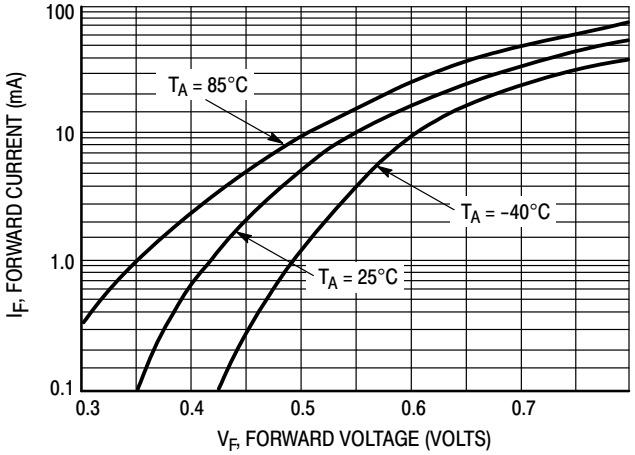

Figure 2. Forward Voltage

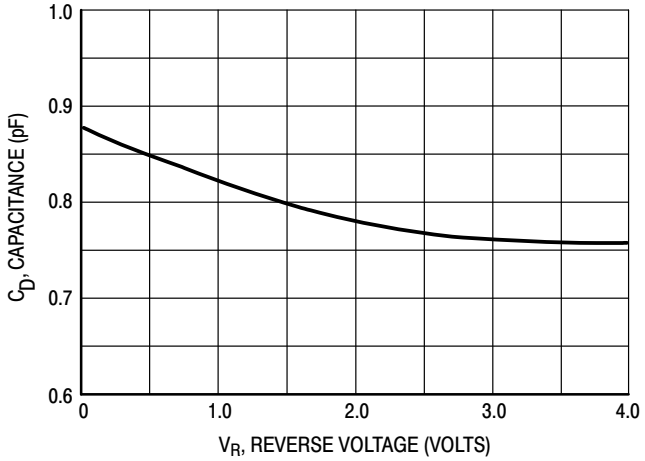

Figure 3. Capacitance

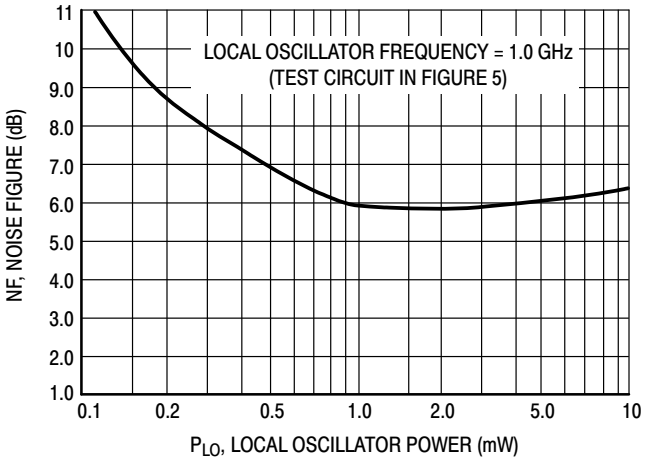

Figure 4. Noise Figure

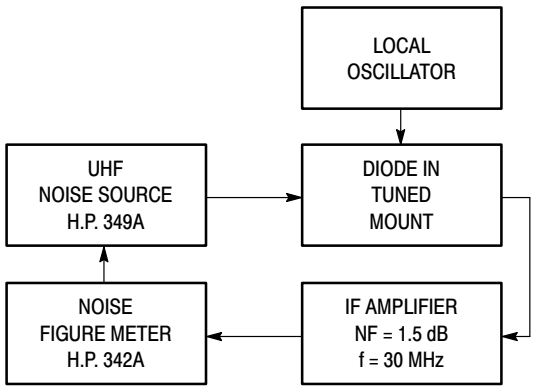

Figure 5. Noise Figure Test Circuit

NOTES ON TESTING AND SPECIFICATIONS

Note 1 — C_D is measured using a capacitance bridge (Boonton Electronics Model 75A or equivalent).

Note 2 — Noise figure measured with diode under test in tuned diode mount using UHF noise source and local oscillator (LO) frequency of 1.0 GHz. The LO power is adjusted for 1.0 mW. IF amplifier NF = 1.5 dB, f = 30 MHz, see Figure 5.

Note 3 — L_S is measured on a package having a short instead of a die, using an impedance bridge (Boonton Radio Model 250A RX Meter).

TO−92 (TO−226)
CASE 182−06
ISSUE L

DATE 04/18/1998



SCALE 1:1

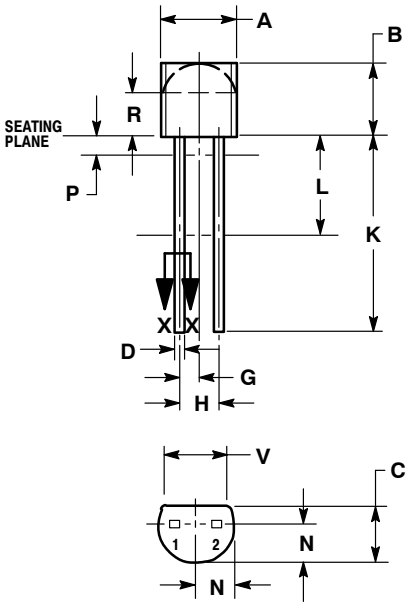

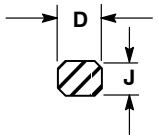

SECTION X−X

NOTES:
1. DIMENSIONING AND TOLERANCING PER ANSI Y14.5M, 1982.
2. CONTROLLING DIMENSION: INCH.
3. CONTOUR OF PACKAGE BEYOND ZONE R IS UNCONTROLLED.
4. LEAD DIMENSION IS UNCONTROLLED IN P AND BEYOND DIMENSION K MINIMUM.

	INCHES		MILLIMETERS	
DIM	MIN	MAX	MIN	MAX
A	0.175	0.205	4.45	5.21
B	0.170	0.210	4.32	5.33
C	0.125	0.165	3.18	4.19
D	0.016	0.021	0.407	0.533
G	0.050 BSC		1.27 BSC	
H	0.100 BSC		2.54 BSC	
J	0.014	0.016	0.36	0.41
K	0.500	---	12.70	---
L	0.250	---	6.35	---
N	0.080	0.105	2.03	2.66
P	---	0.050	---	1.27
R	0.115	---	2.93	---
V	0.135	---	3.43	---

STYLE 1:
PIN 1. ANODE
2. CATHODE

STYLE 2:
PIN 1. CATHODE
2. ANODE

STYLE 3:
PIN 1. MAIN TERMINAL 1
2. MAIN TERMINAL 2

STYLE 4:
CANCELLED

STYLE 5:
PIN 1. INPUT
2. OUTPUT

DOCUMENT NUMBER:	**98ASB42118B**	Electronic versions are uncontrolled except when accessed directly from the Document Repository. Printed versions are uncontrolled except when stamped "CONTROLLED COPY" in red.	
DESCRIPTION:	**TO−92 (TO−226)**		**PAGE 1 OF 1**

ON Semiconductor and ON are trademarks of Semiconductor Components Industries, LLC dba ON Semiconductor or its subsidiaries in the United States and/or other countries. ON Semiconductor reserves the right to make changes without further notice to any products herein. ON Semiconductor makes no warranty, representation or guarantee regarding the suitability of its products for any particular purpose, nor does ON Semiconductor assume any liability arising out of the application or use of any product or circuit, and specifically disclaims any and all liability, including without limitation special, consequential or incidental damages. ON Semiconductor does not convey any license under its patent rights nor the rights of others.

© Semiconductor Components Industries, LLC, 2019

MECHANICAL CASE OUTLINE
PACKAGE DIMENSIONS

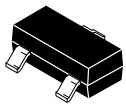

SCALE 4:1

SOT−23 (TO−236)
CASE 318
ISSUE AT

DATE 01 MAR 2023

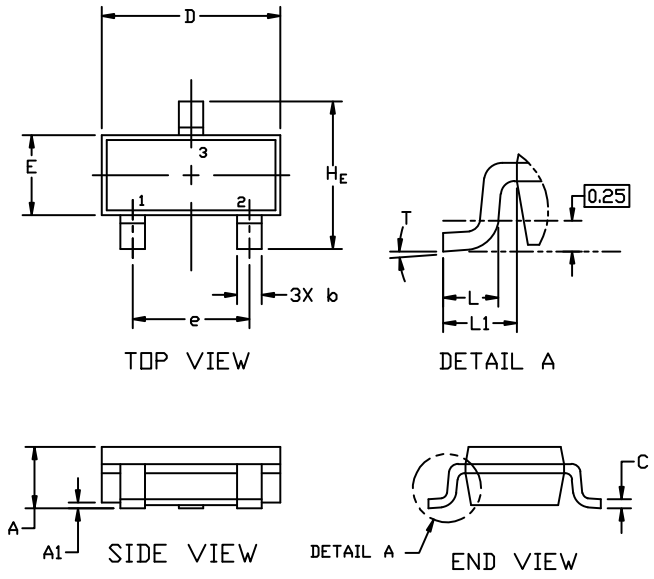

NOTES:

1. DIMENSIONING AND TOLERANCING PER ASME Y14.5M,1994.
2. CONTROLLING DIMENSION: MILLIMETERS
3. MAXIMUM LEAD THICKNESS INCLUDES LEAD FINISH. MINIMUM LEAD THICKNESS IS THE MINIMUM THICKNESS OF THE BASE MATERIAL.
4. DIMENSIONS D AND E DO NOT INCLUDE MOLD FLASH, PROTRUSIONS, OR GATE BURRS.

	MILLIMETERS			INCHES		
DIM	MIN.	NOM.	MAX.	MIN.	NOM.	MAX.
A	0.89	1.00	1.11	0.035	0.039	0.044
A1	0.01	0.06	0.10	0.000	0.002	0.004
b	0.37	0.44	0.50	0.015	0.017	0.020
c	0.08	0.14	0.20	0.003	0.006	0.008
D	2.80	2.90	3.04	0.110	0.114	0.120
E	1.20	1.30	1.40	0.047	0.051	0.055
e	1.78	1.90	2.04	0.070	0.075	0.080
L	0.30	0.43	0.55	0.012	0.017	0.022
L1	0.35	0.54	0.69	0.014	0.021	0.027
H_E	2.10	2.40	2.64	0.083	0.094	0.104
T	0°	---	10°	0°	---	10°

GENERIC MARKING DIAGRAM*

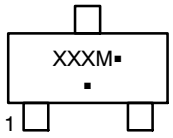

XXX = Specific Device Code
M = Date Code
▪ = Pb−Free Package

*This information is generic. Please refer to device data sheet for actual part marking. Pb−Free indicator, “G” or microdot “▪”, may or may not be present. Some products may not follow the Generic Marking.

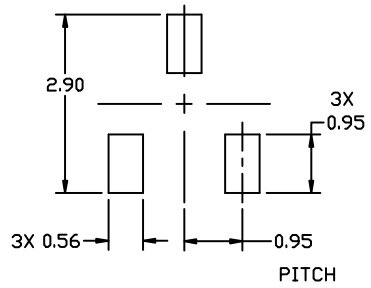

RECOMMENDED
MOUNTING FOOTPRINT

* For additional information on our Pb-Free strategy and soldering details, please download the ON Semiconductor Soldering and Mounting Techniques Reference Manual, SOLDERRM/D.

STYLES ON PAGE 2

DOCUMENT NUMBER:	**98ASB42226B**	Electronic versions are uncontrolled except when accessed directly from the Document Repository. Printed versions are uncontrolled except when stamped “CONTROLLED COPY” in red.	
DESCRIPTION:	**SOT−23 (TO−236)**		**PAGE 1 OF 2**

onsemi and ONSEMI. are trademarks of Semiconductor Components Industries, LLC dba **onsemi** or its subsidiaries in the United States and/or other countries. **onsemi** reserves the right to make changes without further notice to any products herein. **onsemi** makes no warranty, representation or guarantee regarding the suitability of its products for any particular purpose, nor does **onsemi** assume any liability arising out of the application or use of any product or circuit, and specifically disclaims any and all liability, including without limitation special, consequential or incidental damages. **onsemi** does not convey any license under its patent rights nor the rights of others.

© Semiconductor Components Industries, LLC, 2019

SOT−23 (TO−236)
CASE 318
ISSUE AT

DATE 01 MAR 2023

STYLE 1 THRU 5:
CANCELLED

STYLE 6:
PIN 1. BASE
2. EMITTER
3. COLLECTOR

STYLE 7:
PIN 1. EMITTER
2. BASE
3. COLLECTOR

STYLE 8:
PIN 1. ANODE
2. NO CONNECTION
3. CATHODE

STYLE 9:
PIN 1. ANODE
2. ANODE
3. CATHODE

STYLE 10:
PIN 1. DRAIN
2. SOURCE
3. GATE

STYLE 11:
PIN 1. ANODE
2. CATHODE
3. CATHODE−ANODE

STYLE 12:
PIN 1. CATHODE
2. CATHODE
3. ANODE

STYLE 13:
PIN 1. SOURCE
2. DRAIN
3. GATE

STYLE 14:
PIN 1. CATHODE
2. GATE
3. ANODE

STYLE 15:
PIN 1. GATE
2. CATHODE
3. ANODE

STYLE 16:
PIN 1. ANODE
2. CATHODE
3. CATHODE

STYLE 17:
PIN 1. NO CONNECTION
2. ANODE
3. CATHODE

STYLE 18:
PIN 1. NO CONNECTION
2. CATHODE
3. ANODE

STYLE 19:
PIN 1. CATHODE
2. ANODE
3. CATHODE−ANODE

STYLE 20:
PIN 1. CATHODE
2. ANODE
3. GATE

STYLE 21:
PIN 1. GATE
2. SOURCE
3. DRAIN

STYLE 22:
PIN 1. RETURN
2. OUTPUT
3. INPUT

STYLE 23:
PIN 1. ANODE
2. ANODE
3. CATHODE

STYLE 24:
PIN 1. GATE
2. DRAIN
3. SOURCE

STYLE 25:
PIN 1. ANODE
2. CATHODE
3. GATE

STYLE 26:
PIN 1. CATHODE
2. ANODE
3. NO CONNECTION

STYLE 27:
PIN 1. CATHODE
2. CATHODE
3. CATHODE

STYLE 28:
PIN 1. ANODE
2. ANODE
3. ANODE

onsemi and onsemi are trademarks of Semiconductor Components Industries, LLC dba **onsemi** or its subsidiaries in the United States and/or other countries. **onsemi** reserves the right to make changes without further notice to any products herein. **onsemi** makes no warranty, representation or guarantee regarding the suitability of its products for any particular purpose, nor does **onsemi** assume any liability arising out of the application or use of any product or circuit, and specifically disclaims any and all liability, including without limitation special, consequential or incidental damages. **onsemi** does not convey any license under its patent rights nor the rights of others.

© Semiconductor Components Industries, LLC, 2019

onsemi, , and other names, marks, and brands are registered and/or common law trademarks of Semiconductor Components Industries, LLC dba "**onsemi**" or its affiliates and/or subsidiaries in the United States and/or other countries. **onsemi** owns the rights to a number of patents, trademarks, copyrights, trade secrets, and other intellectual property. A listing of **onsemi**'s product/patent coverage may be accessed at www.onsemi.com/site/pdf/Patent−Marking.pdf. **onsemi** reserves the right to make changes at any time to any products or information herein, without notice. The information herein is provided "as−is" and **onsemi** makes no warranty, representation or guarantee regarding the accuracy of the information, product features, availability, functionality, or suitability of its products for any particular purpose, nor does **onsemi** assume any liability arising out of the application or use of any product or circuit, and specifically disclaims any and all liability, including without limitation special, consequential or incidental damages. Buyer is responsible for its products and applications using **onsemi** products, including compliance with all laws, regulations and safety requirements or standards, regardless of any support or applications information provided by **onsemi**. "Typical" parameters which may be provided in **onsemi** data sheets and/or specifications can and do vary in different applications and actual performance may vary over time. All operating parameters, including "Typicals" must be validated for each customer application by customer's technical experts. **onsemi** does not convey any license under any of its intellectual property rights nor the rights of others. **onsemi** products are not designed, intended, or authorized for use as a critical component in life support systems or any FDA Class 3 medical devices or medical devices with a same or similar classification in a foreign jurisdiction or any devices intended for implantation in the human body. Should Buyer purchase or use **onsemi** products for any such unintended or unauthorized application, Buyer shall indemnify and hold **onsemi** and its officers, employees, subsidiaries, affiliates, and distributors harmless against all claims, costs, damages, and expenses, and reasonable attorney fees arising out of, directly or indirectly, any claim of personal injury or death associated with such unintended or unauthorized use, even if such claim alleges that **onsemi** was negligent regarding the design or manufacture of the part. **onsemi** is an Equal Opportunity/Affirmative Action Employer. This literature is subject to all applicable copyright laws and is not for resale in any manner.

ADDITIONAL INFORMATION

TECHNICAL PUBLICATIONS:
Technical Library: www.onsemi.com/design/resources/technical−documentation
onsemi Website: www.onsemi.com

ONLINE SUPPORT: www.onsemi.com/support
For additional information, please contact your local Sales Representative at www.onsemi.com/support/sales