8-pin SOIC Single-Channel Phototransistor Output Optocoupler

MOC205M, MOC206M, MOC207M, MOC211M, MOC212M, MOC213M, MOC216M, MOC217M

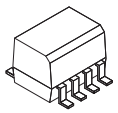

SOIC8
CASE 751DZ

Description

These devices consist of a gallium arsenide infrared emitting diode optically coupled to a monolithic silicon phototransistor detector, in a surface mountable, small outline, plastic package. They are ideally suited for high−density applications, and eliminate the need for through−the−board mounting.

Features

- Closely Matched Current Transfer Ratios Minimum BV_{CEO} of 70 V Guaranteed
  - MOC205M, MOC206M, MOC207M
- Minimum BV_{CEO} of 30 V Guaranteed
  - MOC211M, MOC212M, MOC213M, MOC216M, MOC217M
- Low LED Input Current Required for Easier Logic Interfacing
  - MOC216M, MOC217M
- Convenient Plastic SOIC−8 Surface Mountable Package Style, with 0.050” Lead Spacing
- Safety and Regulatory Approvals:
  - UL1577, 2,500 VAC_{RMS} for 1 Minute
  - DIN−EN/IEC60747−5−5, 565 V Peak Working Insulation Voltage
- These are Pb−Free Devices

Applications

- Feedback Control Circuits
- Interfacing and Coupling Systems of Different Potentials and Impedances
- General Purpose Switching Circuits
- Monitor and Detection Circuits

MARKING DIAGRAM

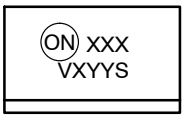

XXX = Specific Device Code
V = DIN EN/IEC60747−5−5 Option (only appears on component ordered with this option)
X = Year Code
YY = Work Week
S = Assembly Package Code

SCHEMATIC

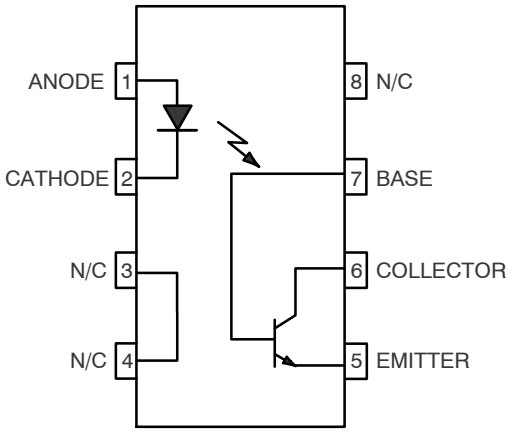

ORDERING INFORMATION

See detailed ordering and shipping information on page 6 of this data sheet.

© Semiconductor Components Industries, LLC, 2006

SAFETY AND INSULATION RATINGS (As per DIN EN/IEC 60747−5−5, this optocoupler is suitable for "safe electrical insulation" only within the safety limit data. Compliance with the safety ratings shall be ensured by means of protective circuits.)

Parameter		Characteristics
Installation Classifications per DIN VDE 0110/1.89 Table 1, For Rated Mains Voltage	<150 V_{RMS}	I–IV
	<300 V_{RMS}	I–III
Climatic Classification		55/100/21
Pollution Degree (DIN VDE 0110/1.89)		2
Comparative Tracking Index		175

Symbol	Parameter	Value	Unit
V_{PR}	Input−to−Output Test Voltage, Method A, V_{IORM} x 1.6 = V_{PR}, Type and Sample Test with t_m = 10 s, Partial Discharge < 5 pC	904	V_{peak}
	Input−to−Output Test Voltage, Method B, V_{IORM} x 1.875 = V_{PR}, 100% Production Test with t_m = 1 s, Partial Discharge < 5 pC	1060	V_{peak}
V_{IORM}	Maximum Working Insulation Voltage	565	V_{peak}
V_{IOTM}	Highest Allowable Over−Voltage	4000	V_{peak}
	External Creepage	≥4	mm
	External Clearance	≥4	mm
DTI	Distance Through Insulation (Insulation Thickness)	≥0.4	mm
T_S	Case Temperature (Note 1)	150	°C
$I_{S,INPUT}$	Input Current (Note 1)	200	mA
$P_{S,OUTPUT}$	Output Power (Note 1)	300	mW
R_{IO}	Insulation Resistance at T_S, V_{IO} = 500 V (Note 1)	$>10^9$	Ω

1. Safety limit values – maximum values allowed in the event of a failure.

ABSOLUTE MAXIMUM RATINGS (T_A = 25°C unless otherwise noted)

Symbol	Rating	Value	Unit
TOTAL DEVICE			
T_{STG}	Storage Temperature	−40 to +125	°C
T_A	Ambient Operating Temperature	−40 to +100	°C
T_J	Junction Temperature	−40 to +125	°C
T_{SOL}	Lead Solder Temperature	260 for 10 seconds	°C
P_D	Total Device Power Dissipation @ T_A = 25°C	240	mW
	Derate above 25°C	2.94	mW/°C
EMITTER			
I_F	Continuous Forward Current	60	mA
I_F (pk)	Forward Current – Peak (PW = 100 μs, 120 pps)	1.0	A
V_R	Reverse Voltage	6.0	V
P_D	LED Power Dissipation @ T_A = 25°C	90	mW
	Derate above 25°C	0.8	mW/°C
DETECTOR			
I_C	Continuous Collector Current	150	mA
V_{CEO}	Collector−Emitter Voltage	30	V
V_{ECO}	Emitter−Collector Voltage	7	V
P_D	Detector Power Dissipation @ T_A = 25°C	150	mW
	Derate above 25°C	1.76	mW/°C

Stresses exceeding those listed in the Maximum Ratings table may damage the device. If any of these limits are exceeded, device functionality should not be assumed, damage may occur and reliability may be affected.

ELECTRICAL CHARACTERISTICS (T_A = 25°C unless otherwise noted)

Symbol	Parameter		Test Condition	Min	Typ	Max	Unit
EMITTER							
V_F	Input Forward Voltage	MOC216M, MOC217M	I_F = 1 mA	–	1.07	1.3	V
		MOC205M, MOC206M, MOC207M MOC211M, MOC212M, MOC213M	I_F = 10 mA	–	1.15	1.5	V
I_R	Reverse Leakage Current		V_R = 6 V	–	0.001	100	μA
C_{IN}	Input Capacitance			–	18	–	pF
DETECTOR							
I_{CEO1}	Collector–Emitter Dark Current		V_{CE} = 10 V, T_A = 25°C	–	1.0	50	nA
I_{CEO2}			V_{CE} = 10 V, T_A = 100°C	–	1.0	–	μA
BV_{CEO}	Collector–Emitter Breakdown Voltage	MOC205M, MOC206M, MOC207M	I_C = 100 μA	70	100	–	V
		MOC211M, MOC212M, MOC213M, MOC216M, MOC217M	I_C = 100 μA	30	100	–	V
BV_{CBO}	Collector–Base Breakdown Voltage		I_C = 10 μA	70	120	–	V
BV_{ECO}	Emitter–Collector Breakdown Voltage		I_E = 100 μA	7	10	–	V
C_{CE}	Collector–Emitter Capacitance		f = 1.0 MHz, V_{CE} = 0 V	–	7	–	pF
COUPLED							
CTR	Collector–Output Current	MOC205M	I_F = 10 mA, V_{CE} = 10 V	40	–	80	%
		MOC206M	I_F = 10 mA, V_{CE} = 10 V	63	–	125	%
		MOC207M	I_F = 10 mA, V_{CE} = 10 V	100	–	200	%
		MOC211M	I_F = 10 mA, V_{CE} = 10 V	20	–	–	%
		MOC212M	I_F = 10 mA, V_{CE} = 10 V	50	–	–	%
		MOC213M	I_F = 10 mA, V_{CE} = 10 V	100	–	–	%
		MOC216M	I_F = 1 mA, V_{CE} = 5 V	50	–	–	%
		MOC217M	I_F = 1 mA, V_{CE} = 5 V	100	–	–	%
$V_{CE(SAT)}$	Collector–Emitter Saturation Voltage	MOC205M, MOC206M, MOC207M MOC211M, MOC212M, MOC213M	I_C = 2 mA, I_F = 10 mA	–	–	0.4	V
		MOC216M, MOC217M	I_C = 100 μA, I_F = 1 mA	–	–	0.4	V
t_{on}	Turn–On Time		I_C = 2 mA, V_{CC} = 10 V, R_L = 100 Ω (Figure 12)	–	7.5	–	μs
t_{off}	Turn–Off Time		I_C = 2 mA, V_{CC} = 10 V, R_L = 100 Ω (Figure 12)	–	5.7	–	μs
t_r	Rise Time		I_C = 2 mA, V_{CC} = 10 V, R_L = 100 Ω (Figure 12)	–	3.2	–	μs
t_f	Fall Time		I_C = 2 mA, V_{CC} = 10 V, R_L = 100 Ω (Figure 12)	–	4.7	–	μs
ISOLATION CHARACTERISTICS							
V_{ISO}	Input–Output Isolation Voltage		t = 1 Minute	2500	–	–	VAC_{RMS}
C_{ISO}	Isolation Capacitance		V_{I-O} = 0 V, f = 1 MHz	–	0.2	–	pF
R_{ISO}	Isolation Resistance		V_{I-O} = ±500 VDC, T_A = 25°C	10^{11}	–	–	Ω

Product parametric performance is indicated in the Electrical Characteristics for the listed test conditions, unless otherwise noted. Product performance may not be indicated by the Electrical Characteristics if operated under different conditions.

TYPICAL PERFORMANCE CURVES

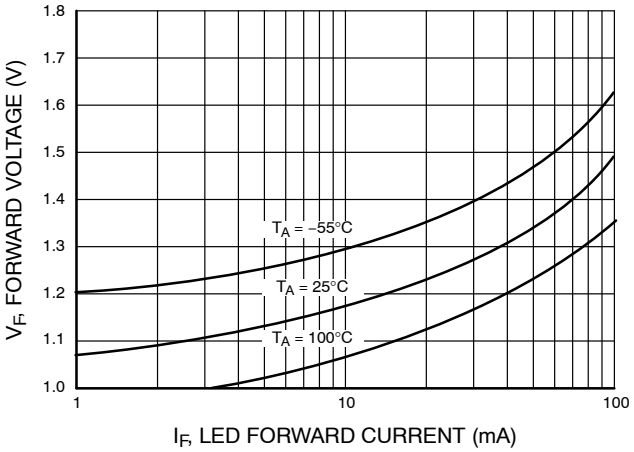

Figure 1. LED Forward Voltage vs. Forward Current

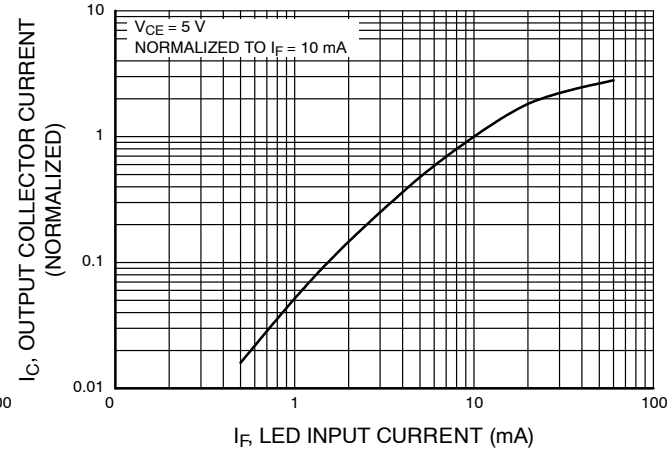

Figure 2. Output Current vs. Input Current

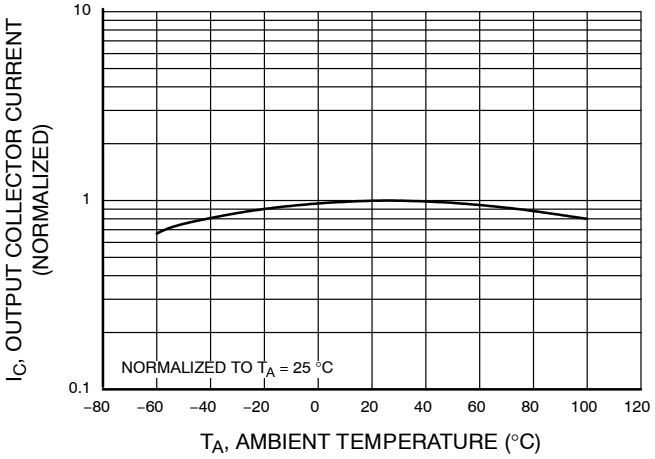

Figure 3. Output Current vs. Ambient Temperature

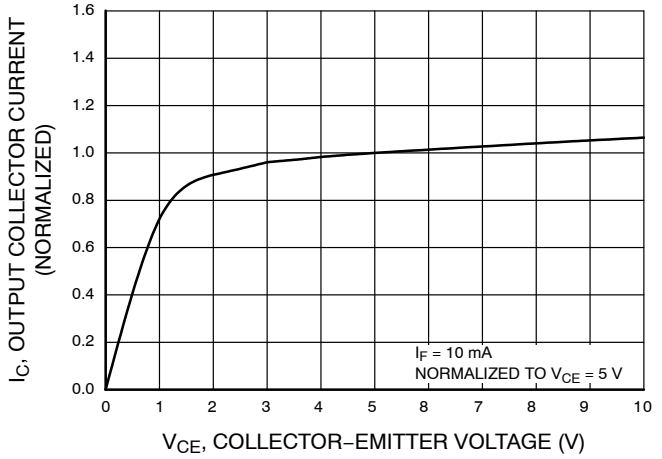

Figure 4. Output Current vs. Collector−Emitter Voltage

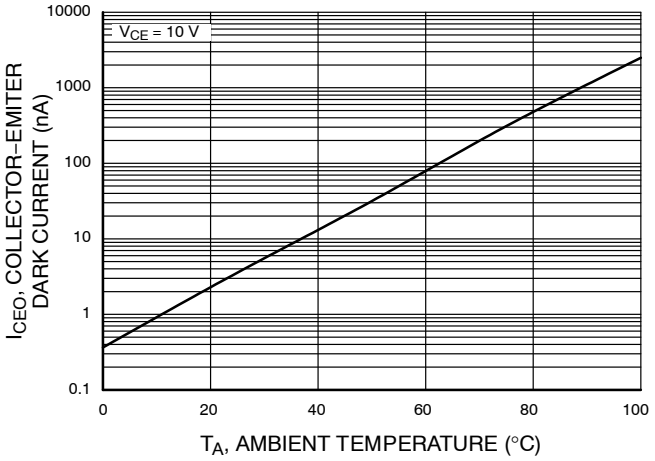

Figure 5. Dark Current vs. Ambient Temperature

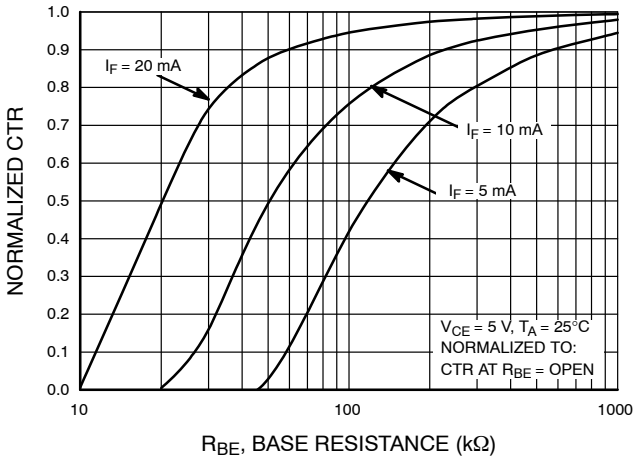

Figure 6. CTR vs. R_{BE} (Unsaturated)

TYPICAL PERFORMANCE CURVES (continued)

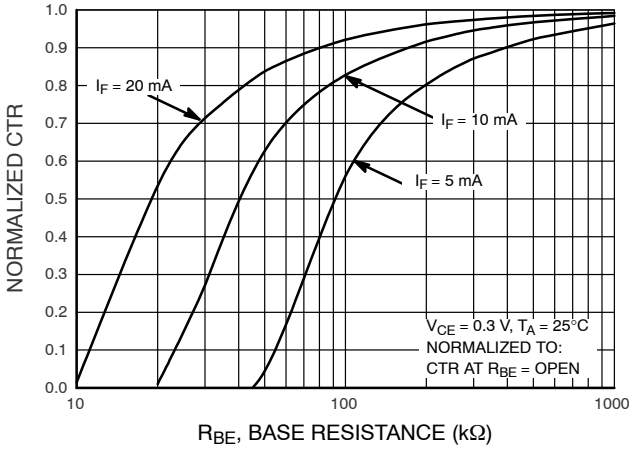

Figure 7. CTR vs. R_{BE} (Saturated)

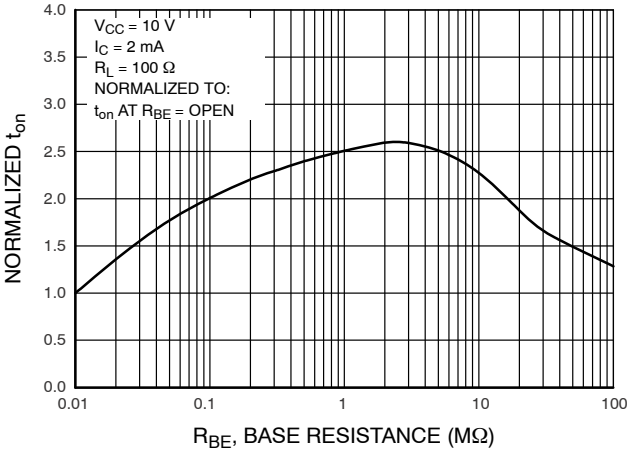

Figure 8. Normalized t_{on} vs. R_{BE}

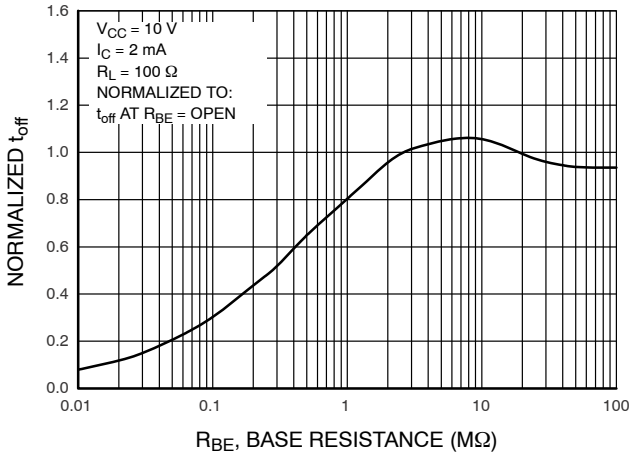

Figure 9. Normalized t_{off} vs. R_{BE}

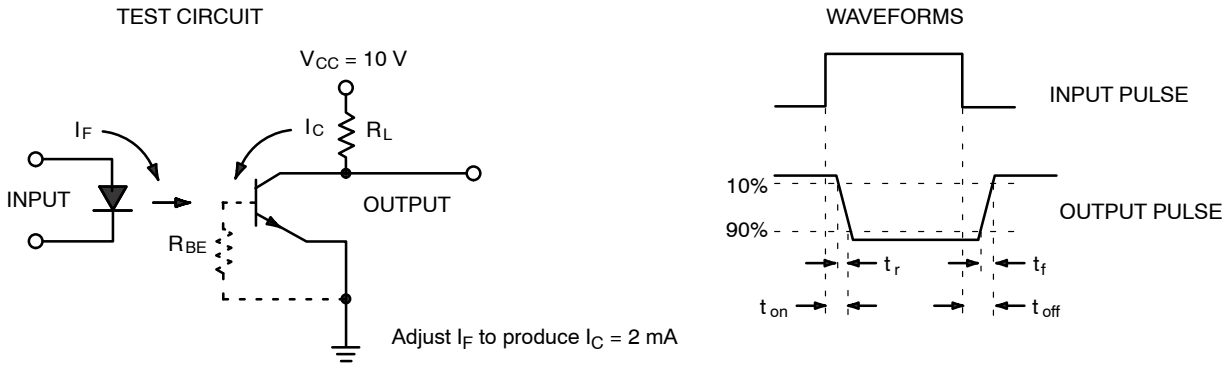

Figure 10. Switching Time Test Circuit and Waveforms

REFLOW PROFILE

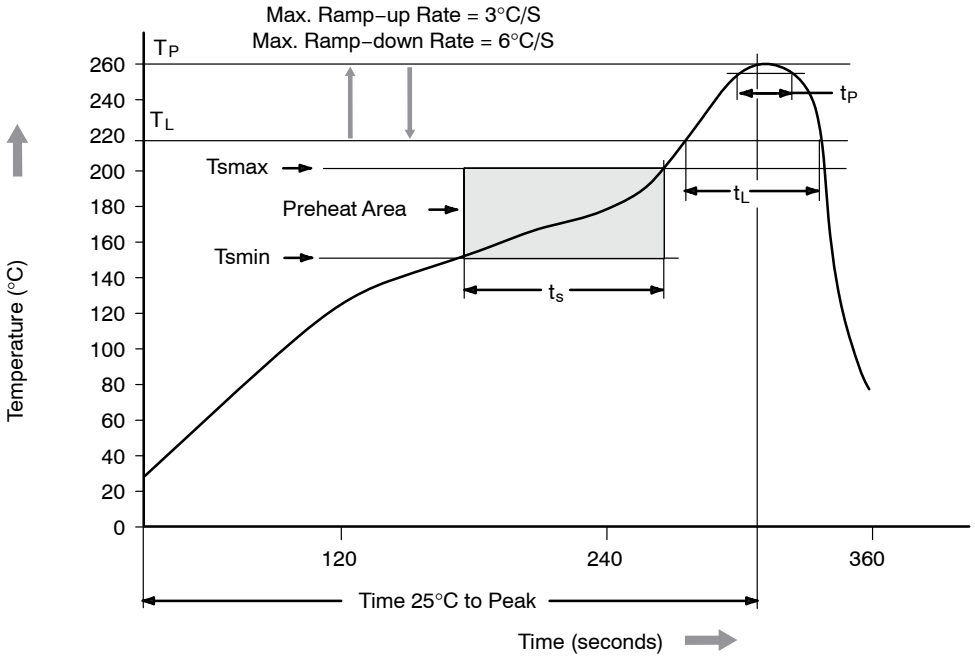

Figure 11. Reflow Profile

Table 1.

Profile Feature	Pb−Free Assembly Profile
Temperature Minimum (Tsmin)	150°C
Temperature Maximum (Tsmax)	200°C
Time (t_S) from (Tsmin to Tsmax)	60 – 120 seconds
Ramp−up Rate (t_L to t_P)	3°C/second maximum
Liquidous Temperature (T_L)	217°C
Time (t_L) Maintained Above (T_L)	60 – 150 seconds
Peak Body Package Temperature	260°C +0°C / −5°C
Time (t_P) within 5°C of 260°C	30 seconds
Ramp−down Rate (T_P to T_L)	6°C/second maximum
Time 25°C to Peak Temperature	8 minutes maximum

ORDERING INFORMATION (Note 2)

Part Number	Package	Shipping†
MOC205M	Small Outline 8−Pin	50 Units / Tube
MOC205R2M	Small Outline 8−Pin	2500 / Tape & Reel
MOC205VM	Small Outline 8−Pin, DIN EN/IEC60747−5−5 Option	50 Units / Tube
MOC205R2VM	Small Outline 8−Pin, DIN EN/IEC60747−5−5 Option	2500 / Tape & Reel

†For information on tape and reel specifications, including part orientation and tape sizes, please refer to our Tape and Reel Packaging Specifications Brochure, BRD8011/D.

2. The product orderable part number system listed in this table also applies to the MOC20XM and MOC21XM products.

SOIC8
CASE 751DZ
ISSUE O

DATE 30 SEP 2016

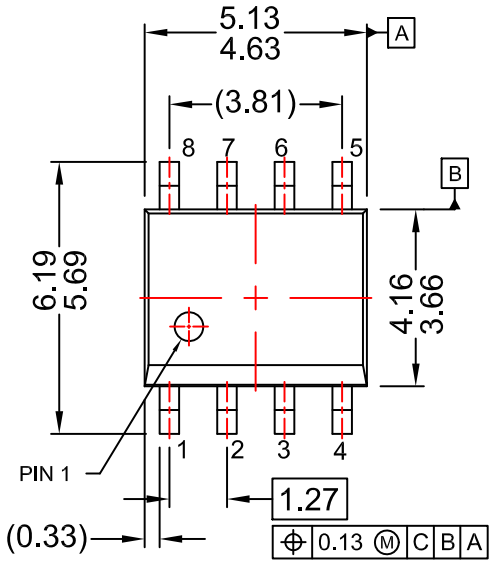

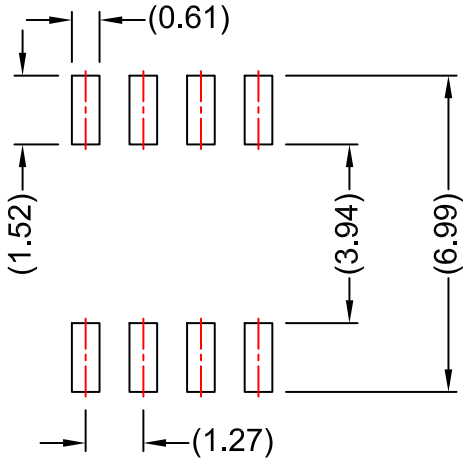

LAND PATTERN RECOMMENDATION

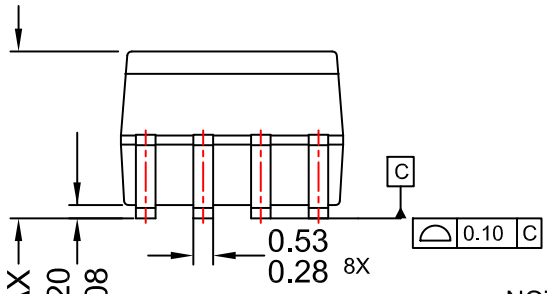

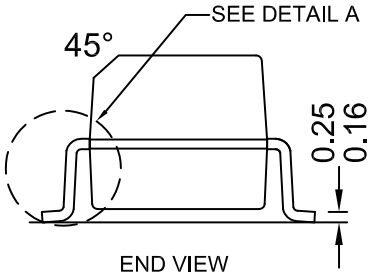

END VIEW

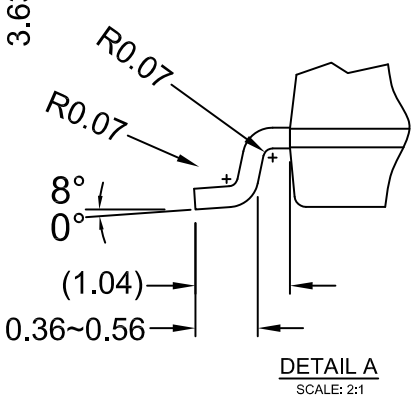

DETAIL A
SCALE: 2:1

NOTES:

A) NO STANDARD APPLIES TO THIS PACKAGE
B) ALL DIMENSIONS ARE IN MILLIMETERS.
C) DIMENSIONS DO NOT INCLUDE MOLD FLASH OR BURRS.
D) LANDPATTERN STANDARD: SOIC127P600X175-8M.

DOCUMENT NUMBER:	**98AON13733G**	Electronic versions are uncontrolled except when accessed directly from the Document Repository. Printed versions are uncontrolled except when stamped "CONTROLLED COPY" in red.	
DESCRIPTION:	**SOIC8**		**PAGE 1 OF 1**

ON Semiconductor and ON are trademarks of Semiconductor Components Industries, LLC dba ON Semiconductor or its subsidiaries in the United States and/or other countries. ON Semiconductor reserves the right to make changes without further notice to any products herein. ON Semiconductor makes no warranty, representation or guarantee regarding the suitability of its products for any particular purpose, nor does ON Semiconductor assume any liability arising out of the application or use of any product or circuit, and specifically disclaims any and all liability, including without limitation special, consequential or incidental damages. ON Semiconductor does not convey any license under its patent rights nor the rights of others.

© Semiconductor Components Industries, LLC, 2019

onsemi, , and other names, marks, and brands are registered and/or common law trademarks of Semiconductor Components Industries, LLC dba "**onsemi**" or its affiliates and/or subsidiaries in the United States and/or other countries. **onsemi** owns the rights to a number of patents, trademarks, copyrights, trade secrets, and other intellectual property. A listing of **onsemi**'s product/patent coverage may be accessed at www.onsemi.com/site/pdf/Patent−Marking.pdf. **onsemi** reserves the right to make changes at any time to any products or information herein, without notice. The information herein is provided "as−is" and **onsemi** makes no warranty, representation or guarantee regarding the accuracy of the information, product features, availability, functionality, or suitability of its products for any particular purpose, nor does **onsemi** assume any liability arising out of the application or use of any product or circuit, and specifically disclaims any and all liability, including without limitation special, consequential or incidental damages. Buyer is responsible for its products and applications using **onsemi** products, including compliance with all laws, regulations and safety requirements or standards, regardless of any support or applications information provided by **onsemi**. "Typical" parameters which may be provided in **onsemi** data sheets and/or specifications can and do vary in different applications and actual performance may vary over time. All operating parameters, including "Typicals" must be validated for each customer application by customer's technical experts. **onsemi** does not convey any license under any of its intellectual property rights nor the rights of others. **onsemi** products are not designed, intended, or authorized for use as a critical component in life support systems or any FDA Class 3 medical devices or medical devices with a same or similar classification in a foreign jurisdiction or any devices intended for implantation in the human body. Should Buyer purchase or use **onsemi** products for any such unintended or unauthorized application, Buyer shall indemnify and hold **onsemi** and its officers, employees, subsidiaries, affiliates, and distributors harmless against all claims, costs, damages, and expenses, and reasonable attorney fees arising out of, directly or indirectly, any claim of personal injury or death associated with such unintended or unauthorized use, even if such claim alleges that **onsemi** was negligent regarding the design or manufacture of the part. **onsemi** is an Equal Opportunity/Affirmative Action Employer. This literature is subject to all applicable copyright laws and is not for resale in any manner.

ADDITIONAL INFORMATION

TECHNICAL PUBLICATIONS:
Technical Library: www.onsemi.com/design/resources/technical−documentation
onsemi Website: www.onsemi.com

ONLINE SUPPORT: www.onsemi.com/support
For additional information, please contact your local Sales Representative at www.onsemi.com/support/sales