6-Pin DIP Zero-Cross Triac Driver Optocoupler (800 V Peak)

MOC3081M, MOC3082M, MOC3083M

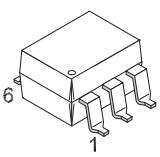

PDIP6 8.51x6.35, 2.54P
CASE 646BY

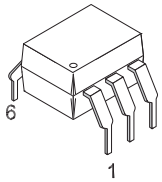

PDIP6 8.51x6.35, 2.54P
CASE 646BZ

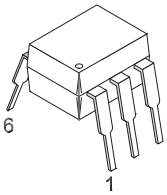

PDIP6 8.51x6.35, 2.54P
CASE 646BX

Description

The MOC3081M, MOC3082M and MOC3083M devices consist of a GaAs infrared emitting diode optically coupled to a monolithic silicon detector performing the function of a zero voltage crossing bilateral triac driver.

They are designed for use with a discrete power triac in the interface of logic systems to equipment powered from 240 VAC lines, such as solid−state relays, industrial controls, motors, solenoids and consumer appliances, etc.

Features

- Simplifies Logic Control of 240 VAC Power
- Zero Voltage Crossing to Minimize Conducted and Radiated Line Noise
- 800 V Peak Blocking Voltage
- Superior Static dv/dt
  - 1500 V/μs Typical, 600 V/μs Guaranteed
- Safety and Regulatory Approvals
  - UL1577, 4,170 VAC_{RMS} for 1 Minute
  - DIN EN/IEC60747−5−5
- These are Pb−Free Devices

Applications

- Solenoid/Valve Controls
- Lighting Controls
- Static Power Switches
- AC Motor Starters
- Temperature Controls
- E.M. Contactors
- AC Motor Drives
- Solid State Relays

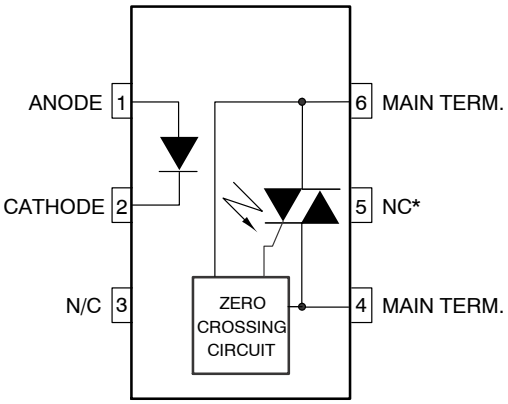

Figure 1. Schematic

ORDERING INFORMATION

See detailed ordering and shipping information on page 9 of this data sheet.

© Semiconductor Components Industries, LLC, 2019

SAFETY AND INSULATION RATINGS

As per DIN EN/IEC 60747−5−5, this optocoupler is suitable for “safe electrical insulation” only within the safety limit data. Compliance with the safety ratings shall be ensured by means of protective circuits.

Parameter		Characteristics
Installation Classifications per DIN VDE 0110/1.89 Table 1, For Rated Mains Voltage	< 150 V_{RMS}	I–IV
	< 300 V_{RMS}	I–IV
Climatic Classification		40/85/21
Pollution Degree (DIN VDE 0110/1.89)		2
Comparative Tracking Index		175

Symbol	Parameter	Value	Unit
V_{PR}	Input−to−Output Test Voltage, Method A, V_{IORM} x 1.6 = V_{PR}, Type and Sample Test with t_m = 10 s, Partial Discharge < 5 pC	1360	Vpeak
	Input−to−Output Test Voltage, Method B, V_{IORM} x 1.875 = V_{PR}, 100% Production Test with t_m = 1 s, Partial Discharge < 5 pC	1594	Vpeak
V_{IORM}	Maximum Working Insulation Voltage	850	Vpeak
V_{IOTM}	Highest Allowable Over−Voltage	6000	Vpeak
	External Creepage	≥ 7	mm
	External Clearance	≥ 7	mm
	External Clearance (for Option TV, 0.4” Lead Spacing)	≥ 10	mm
DTI	Distance Through Insulation (Insulation Thickness)	≥ 0.5	mm
R_{IO}	Insulation Resistance at T_S, V_{IO} = 500 V	> 10^9	Ω

ABSOLUTE MAXIMUM RATINGS (T_A = 25°C unless otherwise specified)

Symbol	Parameters	Value	Unit
Total Device			
T_{STG}	Storage Temperature	−40 to 125	°C
T_{OPR}	Operating Temperature	−40 to 85	°C
T_J	Junction Temperature Range	−40 to 100	°C
T_{SOL}	Lead Solder Temperature	260 for 10 seconds	°C
P_D	Total Device Power Dissipation at 25°C Ambient	250	mW
	Derate Above 25°C	2.94	mW/°C
Emitter			
I_F	Continuous Forward Current	60	mA
V_R	Reverse Voltage	6	V
P_D	Total Power Dissipation at 25°C Ambient	120	mW
	Derate Above 25°C	1.41	mW/°C
Detector			
V_{DRM}	Off−State Output Terminal Voltage	800	V
I_{TSM}	Peak Non−Repetitive Surge Current (Single Cycle 60 Hz Sine Wave)	1	A
P_D	Total Power Dissipation at 25°C Ambient	150	mW
	Derate Above 25°C	1.76	mW/°C

Stresses exceeding those listed in the Maximum Ratings table may damage the device. If any of these limits are exceeded, device functionality should not be assumed, damage may occur and reliability may be affected.

ELECTRICAL CHARACTERISTICS

T_A = 25°C unless otherwise specified

INDIVIDUAL COMPONENT CHARACTERISTICS

Symbol	Parameters	Test Conditions	Min.	Typ.	Max.	Unit
Emitter						
V_F	Input Forward Voltage	I_F = 30 mA		1.3	1.5	V
I_R	Reverse Leakage Current	V_R = 6 V		0.005	100	μA
Detector						
I_{DRM1}	Peak Blocking Current, Either Direction	V_{DRM} = 800 V, I_F = 0 (1)		10	500	nA
dv/dt	Critical Rate of Rise of Off−State Voltage	I_F = 0 (Figure 10) (2)	600	1500		V/μs

1. Test voltage must be applied within dv/dt rating.
2. This is static dv/dt. See Figure 11 for test circuit. Commutating dv/dt is a function of the load−driving thyristor(s) only.

TRANSFER CHARACTERISTICS

Symbol	DC Characteristics	Test Conditions	Device	Min.	Typ.	Max.	Unit
I_{FT}	LED Trigger Current (Rated I_{FT})	Main Terminal Voltage = 3 V (3)	MOC3081M			15	mA
			MOC3082M			10	
			MOC3083M			5	
V_{TM}	Peak On−State Voltage, Either Direction	I_{TM} = 100 mA peak, I_F = rated I_{FT}	All		1.8	3.0	V
I_H	Holding Current, Either Direction		All		500		μA

3. All devices are guaranteed to trigger at an I_F value less than or equal to max I_{FT}. Therefore, recommended operating I_F lies between max I_{FT} (15 mA for MOC3081M, 10 mA for MOC3082M, 5 mA for MOC3083M) and absolute maximum I_F (60 mA).

ZERO CROSSING CHARACTERISTICS

Symbol	Parameters	Test Conditions	Min.	Typ.	Max.	Unit
V_{INH}	Inhibit Voltage (MT1−MT2 voltage above which device will not trigger)	I_F = Rated I_{FT}		12	20	V
I_{DRM2}	Leakage in Inhibited State	I_F = Rated I_{FT}, V_{DRM} = 800 V, off−state			2	mA

ISOLATION CHARACTERISTICS

Symbol	Parameters	Test Conditions	Min.	Typ.	Max.	Unit
V_{ISO}	Isolation Voltage (4)	f = 60 Hz, t = 1 Minute	4170			VAC_{RMS}
R_{ISO}	Isolation Resistance	V_{I-O} = 500 V_{DC}		10^{11}		Ω
C_{ISO}	Isolation Capacitance	V = 0 V, f = 1 MHz		0.2		pF

4. Isolation voltage, V_{ISO}, is an internal device dielectric breakdown rating. For this test, pins 1 and 2 are common, and pins 4, 5 and 6 are common.

Product parametric performance is indicated in the Electrical Characteristics for the listed test conditions, unless otherwise noted. Product performance may not be indicated by the Electrical Characteristics if operated under different conditions.

TYPICAL PERFORMANCE CURVES

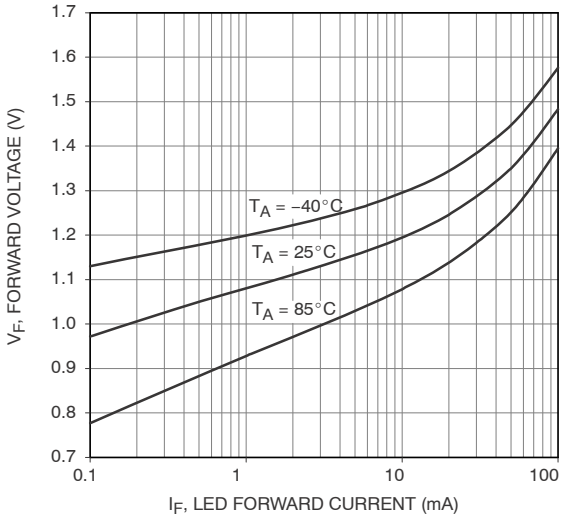

Figure 2. LED Forward Voltage vs. Forward Current

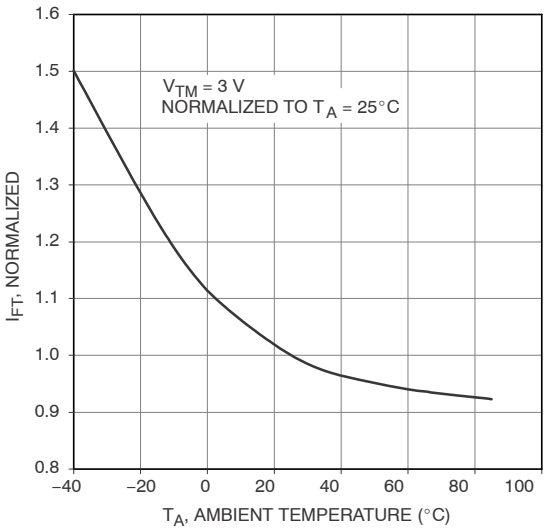

Figure 3. Trigger Current vs. Temperature

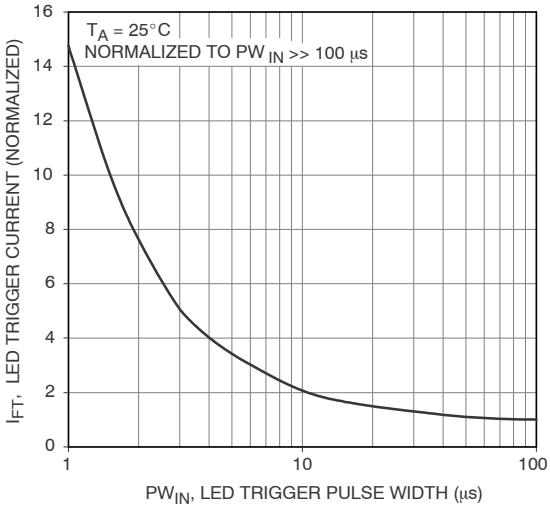

Figure 4. LED Current Required to Trigger vs. LED Pulse Width

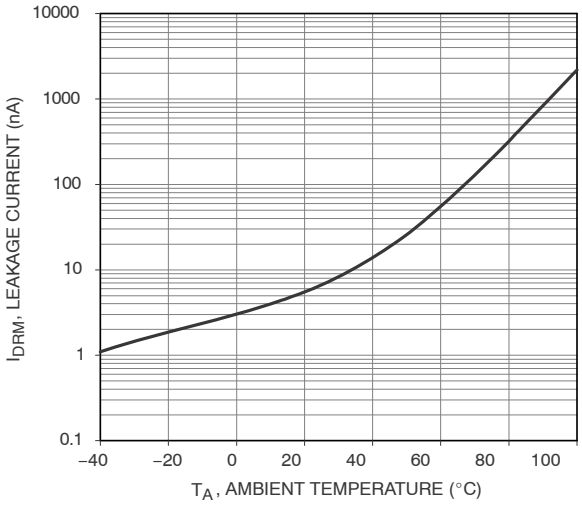

Figure 5. Leakage Current, I_{DRM} vs. Temperature

TYPICAL PERFORMANCE CURVES (CONTINUED)

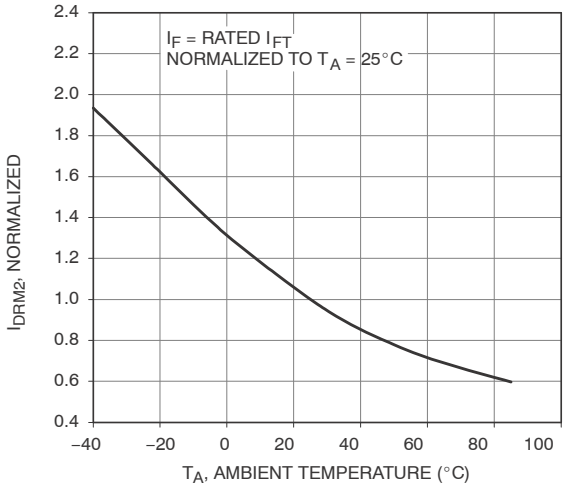

Figure 6. I_{DRM2}, Leakage in Inhibit State vs. Temperature

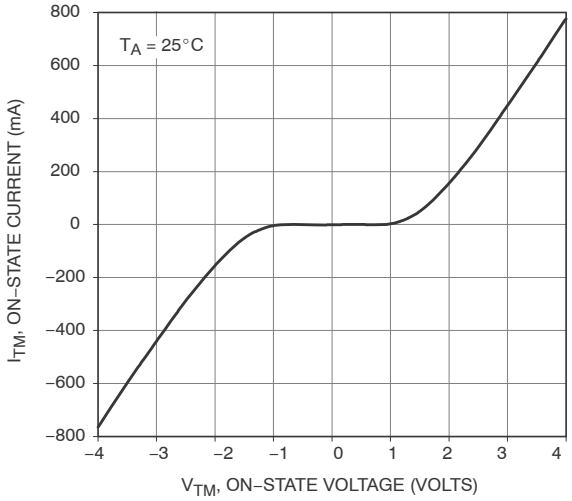

Figure 7. On−State Characteristics

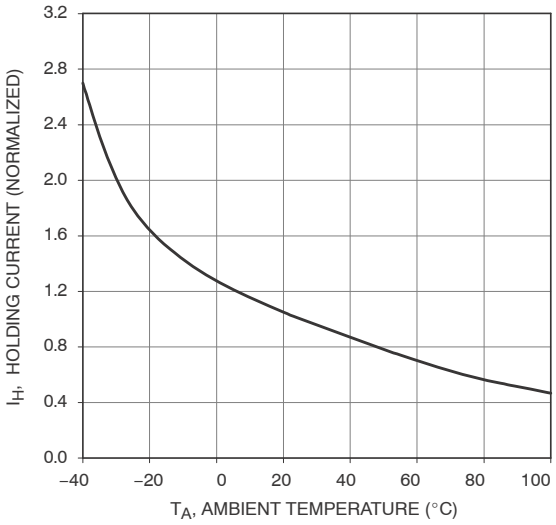

Figure 8. I_H, Holding Current vs. Temperature

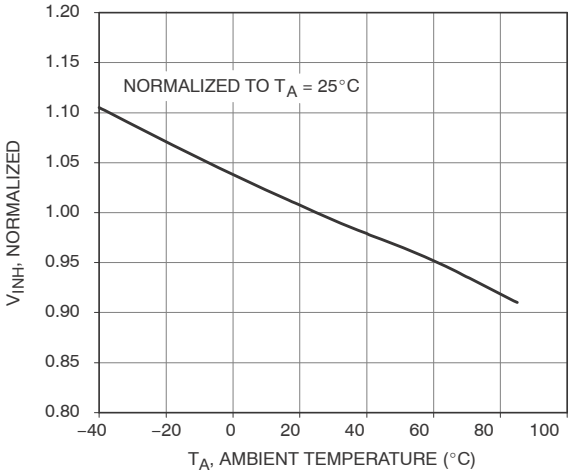

Figure 9. Inhibit Voltage vs. Temperature

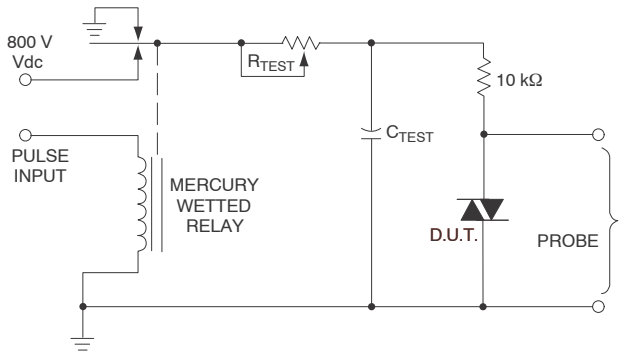

1. The mercury wetted relay provides a high speed repeated pulse to the D.U.T.
2. 100x scope probes are used, to allow high speeds and voltages.
3. The worst−case condition for static dv/dt is established by triggering the D.U.T. with a normal LED input current, then removing the current. The variable R_{TEST} allows the dv/dt to be gradually increased until the D.U.T. continues to trigger in response to the applied voltage pulse, even after the LED current has been removed. The dv/dt is then decreased until the D.U.T. stops triggering. τ_{RC} is measured at this point and recorded.

Figure 10. Static dv/dt Test Circuit

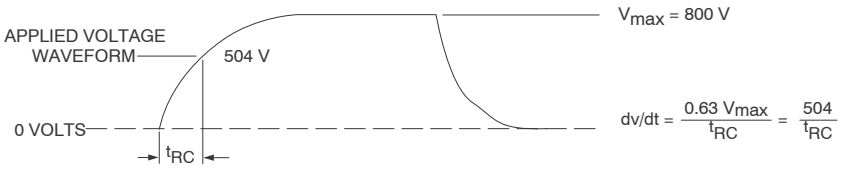

Figure 11. Static dv/dt Test Waveform

Typical circuit for use when hot line switching is required. In this circuit the “hot” side of the line is switched and the load connected to the cold or neutral side. The load may be connected to either the neutral or hot line.

R_{IN} is calculated so that I_F is equal to the rated I_{FT} of the part, 15 mA for the MOC3081M, 10 mA for the MOC3082M, and 5 mA for the MOC3083M. The 39 Ω resistor and 0.01 μF capacitor are for snubbing of the triac and may or may not be necessary depending upon the particular triac and load use.

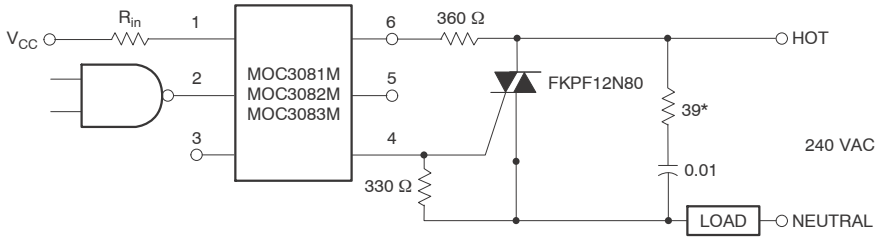

* For highly inductive loads (power factor < 0.5), change this value to 360 Ω.

Figure 12. Hot−Line Switching Application Circuit

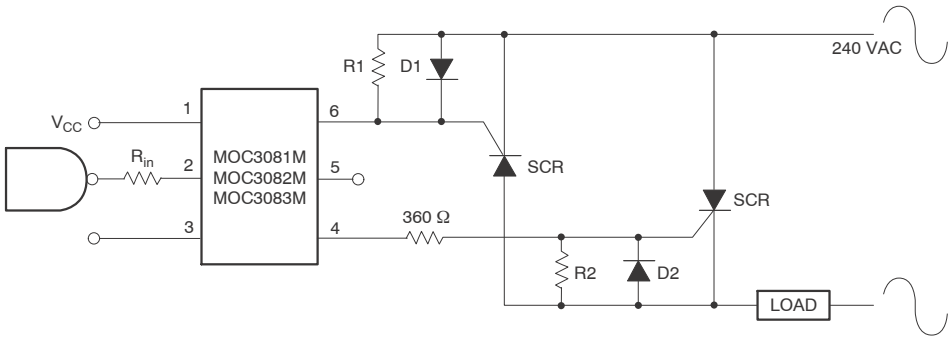

Figure 13. Inverse−Parallel SCR Driver Circuit

Suggested method of firing two, back−to−back SCR’s with an ON Semiconductor triac driver. Diodes can be 1N4001; resistors, R1 and R2, are optional 330 Ω.

NOTE: This optoisolator should not be used to drive a load directly. It is intended to be a trigger device only.

Reflow Profile

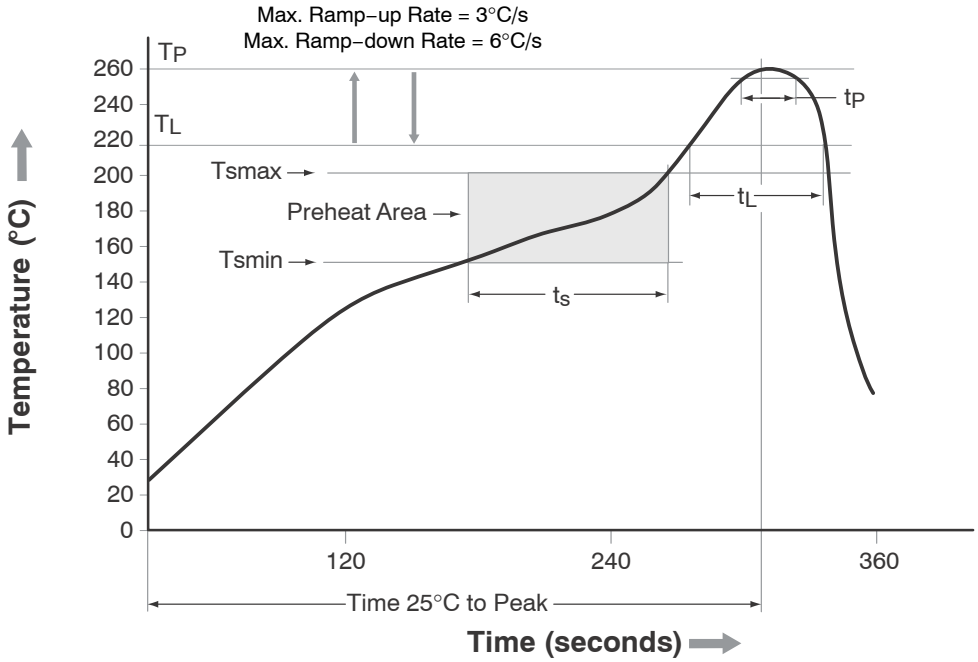

Figure 14. Reflow Profile

Profile Freature	Pb−Free Assembly Profile
Temperature Minimum (Tsmin)	150°C
Temperature Maximum (Tsmax)	200°C
Time (t_S) from (Tsmin to Tsmax)	60 seconds to 120 seconds
Ramp−up Rate (T_L to T_P)	3°C/second maximum
Liquidous Temperature (T_L)	217°C
Time (t_L) Maintained Above (T_L)	60 seconds to 150 seconds
Peak Body Package Temperature	260°C +0°C / −5°C
Time (t_P) within 5°C of 260°C	30 seconds
Ramp−down Rate (T_P to T_L)	6°C/second maximum
Time 25°C to Peak Temperature	8 minutes maximum

ORDERING INFORMATION

Part Number	Package	Shipping
MOC3081M	DIP 6−Pin	50 Units / Tube
MOC3081SM	SMT 6−Pin (Lead Bend)	50 Units / Tube
MOC3081SR2M	SMT 6−Pin (Lead Bend)	1000 Units / Tape & Reel
MOC3081VM	DIP 6−Pin, DIN EN/IEC60747−5−5 Option	50 Units / Tube
MOC3081SVM	SMT 6−Pin (Lead Bend), DIN EN/IEC60747−5−5 Option	50 Units / Tube
MOC3081SR2VM	SMT 6−Pin (Lead Bend), DIN EN/IEC60747−5−5 Option	1000 Units / Tape & Reel
MOC3081TVM	DIP 6−Pin, 0.4” Lead Spacing, DIN EN/IEC60747−5−5 Option	50 Units / Tube

NOTE: The product orderable part number system listed in this table also applies to the MOC3011M, MOC3012M, MOC3020M, MOC3021M, MOC3022M, and MOC3083M product families.

MARKING INFORMATION

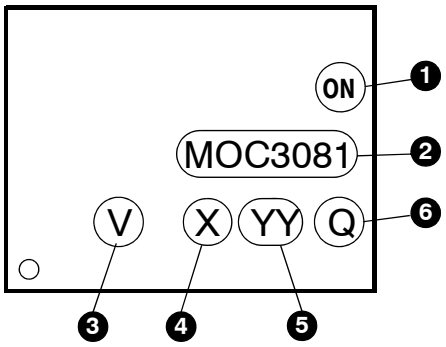

Figure 15. Top Mark

Top Mark Definitions	
1	ON Semiconductor Logo
2	Device Number
3	DIN EN/IEC60747−5−5 Option (only appears on component ordered with this option)
4	One−Digit Year Code, e.g., ‘5’
5	Two−Digit Work Week, Ranging from ‘01’ to ‘53’
6	Assembly Package Code

PDIP6 8.51x6.35, 2.54P
CASE 646BX
ISSUE O

DATE 31 JUL 2016

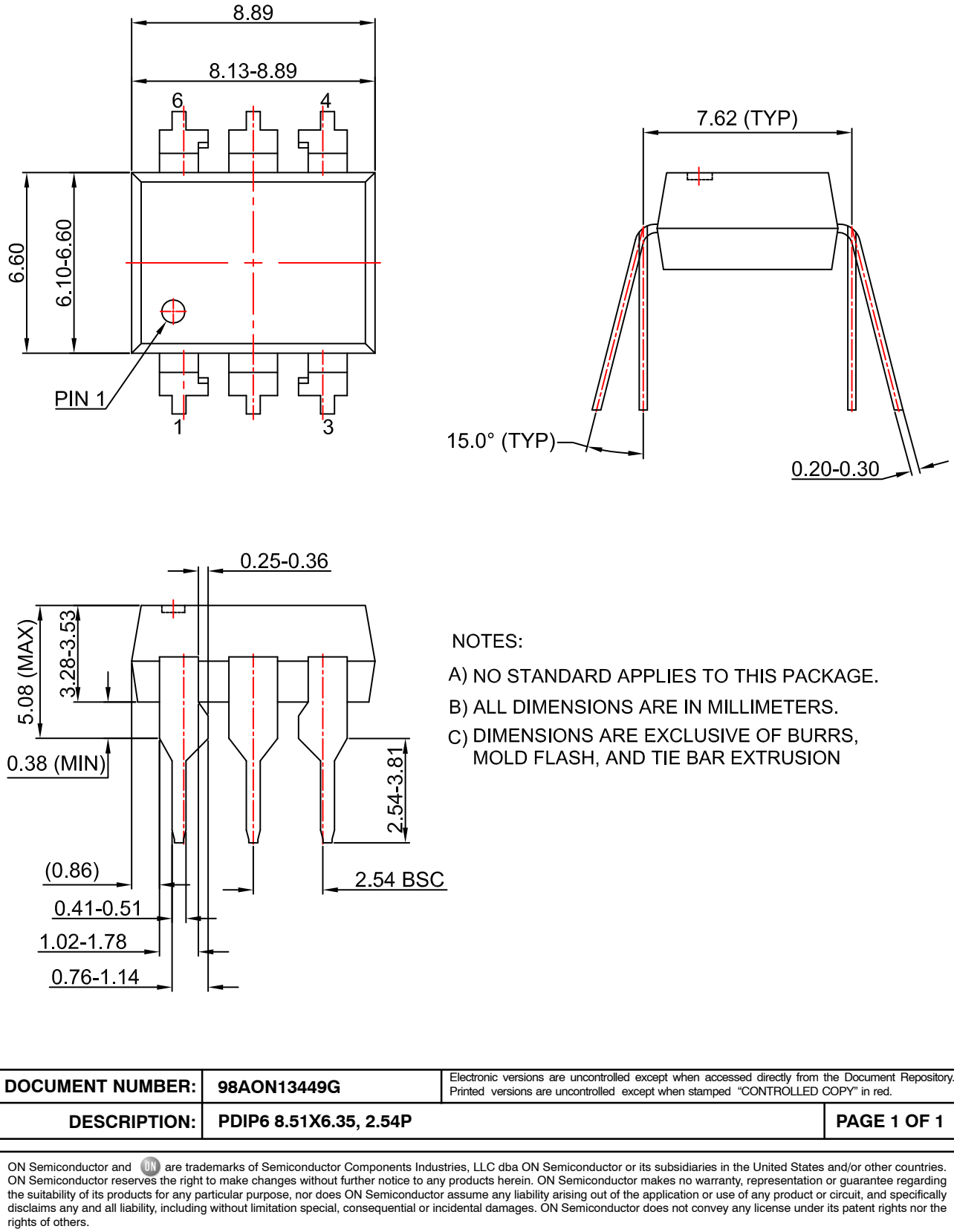

NOTES:

A) NO STANDARD APPLIES TO THIS PACKAGE.

B) ALL DIMENSIONS ARE IN MILLIMETERS.

C) DIMENSIONS ARE EXCLUSIVE OF BURRS, MOLD FLASH, AND TIE BAR EXTRUSION

DOCUMENT NUMBER:	**98AON13449G**	Electronic versions are uncontrolled except when accessed directly from the Document Repository. Printed versions are uncontrolled except when stamped "CONTROLLED COPY" in red.
DESCRIPTION:	**PDIP6 8.51X6.35, 2.54P**	**PAGE 1 OF 1**

ON Semiconductor and ON are trademarks of Semiconductor Components Industries, LLC dba ON Semiconductor or its subsidiaries in the United States and/or other countries. ON Semiconductor reserves the right to make changes without further notice to any products herein. ON Semiconductor makes no warranty, representation or guarantee regarding the suitability of its products for any particular purpose, nor does ON Semiconductor assume any liability arising out of the application or use of any product or circuit, and specifically disclaims any and all liability, including without limitation special, consequential or incidental damages. ON Semiconductor does not convey any license under its patent rights nor the rights of others.

© Semiconductor Components Industries, LLC, 2019

MECHANICAL CASE OUTLINE
PACKAGE DIMENSIONS

ON Semiconductor®

PDIP6 8.51x6.35, 2.54P
CASE 646BY
ISSUE A

DATE 15 JUL 2019

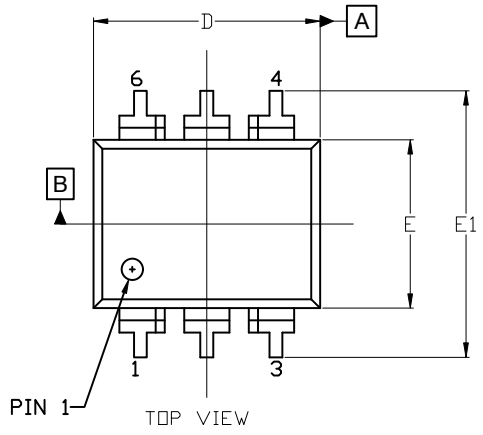

NOTES:
1. DIMENSIONING AND TOLERANCING PER ASME Y14.5M, 2009.
2. CONTROLLING DIMENSION: MILLIMETERS
3. DIMENSIONS A, A1, AND L ARE MEASURED WITH THE PACKAGE SEATED.
4. DIMENSIONS D, D1, AND E1 DO NOT INCLUDE MOLD FLASH OR PROTRUSIONS. MOLD FLASH OR PROTRUSIONS ARE NOT TO EXCEED 2.54mm.
5. PACKAGE CONTOUR IS OPTIONAL (ROUNDED OR SQUARE CORNERS).
6. CENTER LINE OF CORNER LEADS ARE LOCATED BY LOCATING THE CENTER OF FEATURE b2 AND b3.

DIM	MILLIMETERS		
	MIN.	NOM.	MAX.
A	---	---	4.80
A1	0.38	---	---
A2	3.28	3.40	3.53
A3		2.49 REF	
A4		1.89 REF	
b	0.41	0.46	0.51
b1	0.76	0.92	1.14
b2	0.25	0.28	0.36
b3	1.02	1.40	1.78
b4		1.778 REF	
c	0.20	0.25	0.30
D	8.13	8.51	8.89
D1		0.86 REF	
E	6.10	6.35	6.60
E1	8.43	9.17	9.90
E2		8.13 REF	
e		2.54 BSC	
L	0.16	0.52	0.88

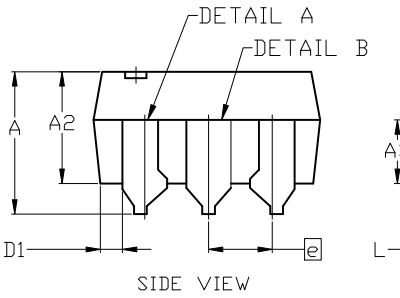

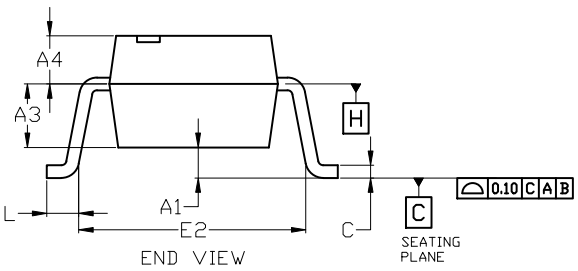

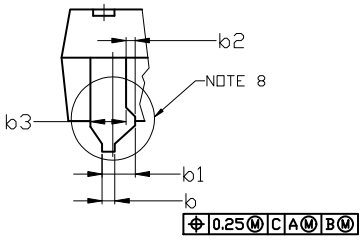

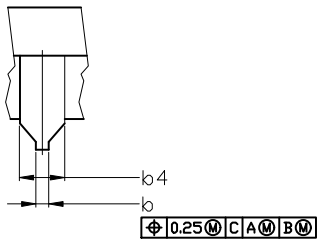

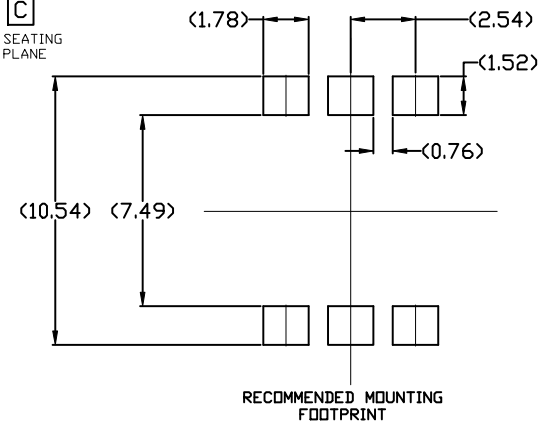

* For additional information on our Pb-Free strategy and soldering details, please download the ON Semiconductor Soldering and Mounting Techniques Reference Manual, SOLDERRM/D.

DOCUMENT NUMBER:	98AON13450G	Electronic versions are uncontrolled except when accessed directly from the Document Repository. Printed versions are uncontrolled except when stamped "CONTROLLED COPY" in red.
DESCRIPTION:	PDIP6 8.51x6.35, 2.54P	PAGE 1 OF 1

ON Semiconductor and ON are trademarks of Semiconductor Components Industries, LLC dba ON Semiconductor or its subsidiaries in the United States and/or other countries. ON Semiconductor reserves the right to make changes without further notice to any products herein. ON Semiconductor makes no warranty, representation or guarantee regarding the suitability of its products for any particular purpose, nor does ON Semiconductor assume any liability arising out of the application or use of any product or circuit, and specifically disclaims any and all liability, including without limitation special, consequential or incidental damages. ON Semiconductor does not convey any license under its patent rights nor the rights of others.

© Semiconductor Components Industries, LLC, 2018

PDIP6 8.51x6.35, 2.54P
CASE 646BZ
ISSUE O

DATE 31 JUL 2016

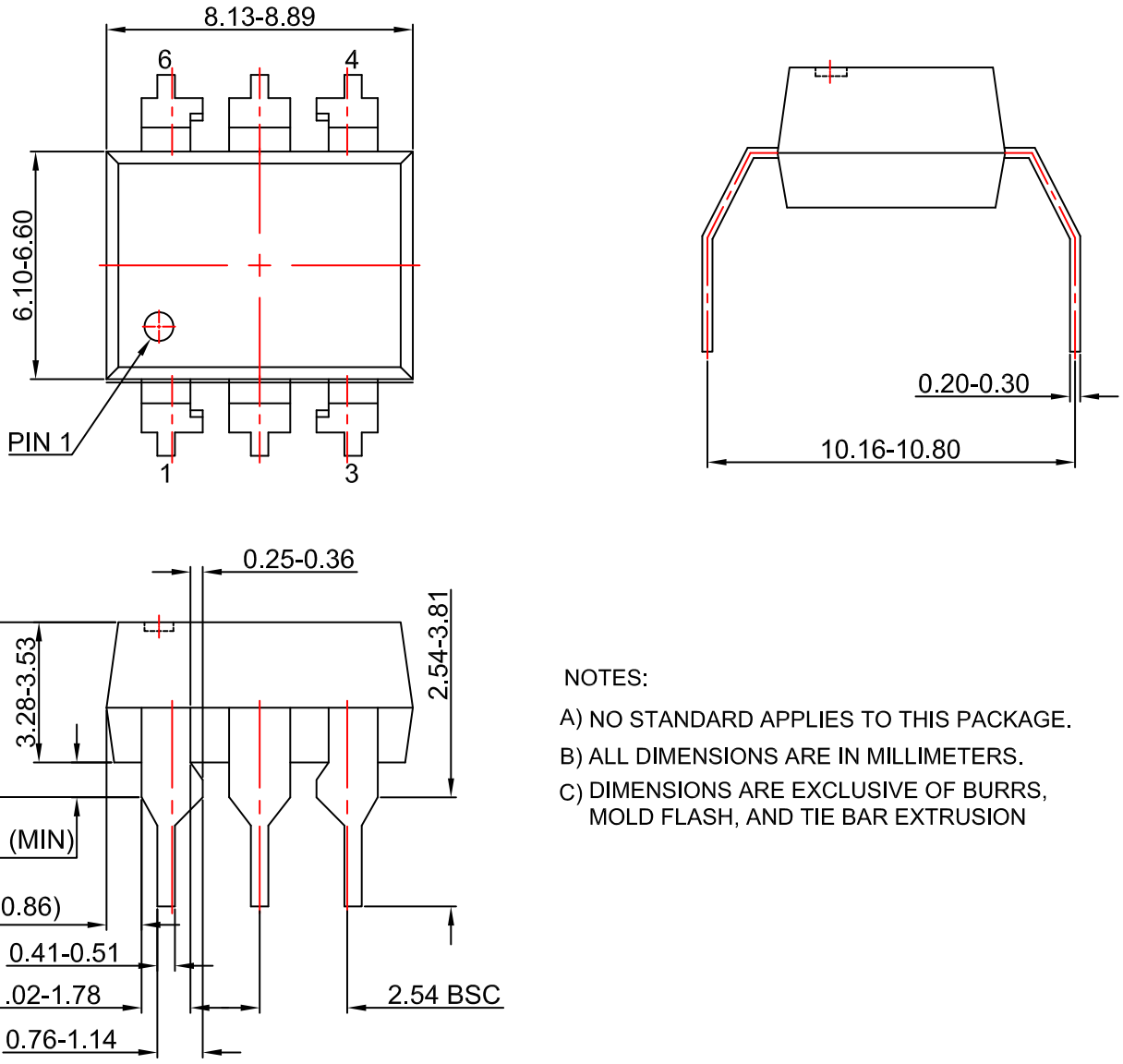

NOTES:

A) NO STANDARD APPLIES TO THIS PACKAGE.

B) ALL DIMENSIONS ARE IN MILLIMETERS.

C) DIMENSIONS ARE EXCLUSIVE OF BURRS, MOLD FLASH, AND TIE BAR EXTRUSION

DOCUMENT NUMBER:	**98AON13451G**	Electronic versions are uncontrolled except when accessed directly from the Document Repository. Printed versions are uncontrolled except when stamped "CONTROLLED COPY" in red.
DESCRIPTION:	**PDIP6 8.51X6.35, 2.54P**	**PAGE 1 OF 1**

ON Semiconductor and ON are trademarks of Semiconductor Components Industries, LLC dba ON Semiconductor or its subsidiaries in the United States and/or other countries. ON Semiconductor reserves the right to make changes without further notice to any products herein. ON Semiconductor makes no warranty, representation or guarantee regarding the suitability of its products for any particular purpose, nor does ON Semiconductor assume any liability arising out of the application or use of any product or circuit, and specifically disclaims any and all liability, including without limitation special, consequential or incidental damages. ON Semiconductor does not convey any license under its patent rights nor the rights of others.

© Semiconductor Components Industries, LLC, 2019

onsemi, , and other names, marks, and brands are registered and/or common law trademarks of Semiconductor Components Industries, LLC dba "**onsemi**" or its affiliates and/or subsidiaries in the United States and/or other countries. **onsemi** owns the rights to a number of patents, trademarks, copyrights, trade secrets, and other intellectual property. A listing of **onsemi**'s product/patent coverage may be accessed at www.onsemi.com/site/pdf/Patent−Marking.pdf. **onsemi** reserves the right to make changes at any time to any products or information herein, without notice. The information herein is provided "as−is" and **onsemi** makes no warranty, representation or guarantee regarding the accuracy of the information, product features, availability, functionality, or suitability of its products for any particular purpose, nor does **onsemi** assume any liability arising out of the application or use of any product or circuit, and specifically disclaims any and all liability, including without limitation special, consequential or incidental damages. Buyer is responsible for its products and applications using **onsemi** products, including compliance with all laws, regulations and safety requirements or standards, regardless of any support or applications information provided by **onsemi**. "Typical" parameters which may be provided in **onsemi** data sheets and/or specifications can and do vary in different applications and actual performance may vary over time. All operating parameters, including "Typicals" must be validated for each customer application by customer's technical experts. **onsemi** does not convey any license under any of its intellectual property rights nor the rights of others. **onsemi** products are not designed, intended, or authorized for use as a critical component in life support systems or any FDA Class 3 medical devices or medical devices with a same or similar classification in a foreign jurisdiction or any devices intended for implantation in the human body. Should Buyer purchase or use **onsemi** products for any such unintended or unauthorized application, Buyer shall indemnify and hold **onsemi** and its officers, employees, subsidiaries, affiliates, and distributors harmless against all claims, costs, damages, and expenses, and reasonable attorney fees arising out of, directly or indirectly, any claim of personal injury or death associated with such unintended or unauthorized use, even if such claim alleges that **onsemi** was negligent regarding the design or manufacture of the part. **onsemi** is an Equal Opportunity/Affirmative Action Employer. This literature is subject to all applicable copyright laws and is not for resale in any manner.

ADDITIONAL INFORMATION

TECHNICAL PUBLICATIONS:
Technical Library: www.onsemi.com/design/resources/technical−documentation
onsemi Website: www.onsemi.com

ONLINE SUPPORT: www.onsemi.com/support
For additional information, please contact your local Sales Representative at www.onsemi.com/support/sales