6-Pin DIP Photodarlington Optocoupler (No Base Connection)

MOC8021M, MOC8050M

The MOC8021M and MOC8050M are photodarlington−type optically coupled optocouplers. The devices have a gallium arsenide infrared emitting diode coupled with a silicon darlington phototransistor.

Features

- High BV_{CEO}:
  - Minimum 50 V (MOC8021M)
  - Minimum 80 V (MOC8050M)
- High Current Transfer Ratio:
  - Minimum 1000% (MOC8021M)
  - Minimum 500% (MOC8050M)
- No Base Connection for Improved Noise Immunity
- Safety and Regulatory Approvals:
  - UL1577, 4,170 VAC_{RMS} for 1 Minute
  - DIN−EN/IEC60747−5−5, 850 V Peak Working Insulation Voltage
- These are Pb−Free Devices

Applications

- Appliances, Measuring Instruments
- I/O Interface for Computers
- Programmable Controllers
- Portable Electronics
- Interfacing and Coupling Systems of Different Potentials and Impedance
- Solid State Relays

SCHEMATIC

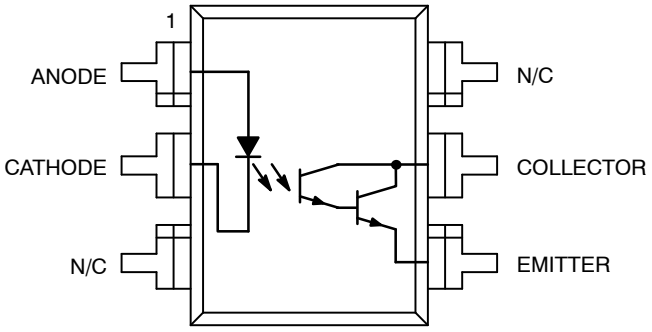

(Top View)

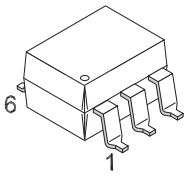

PDIP6
CASE 646BY

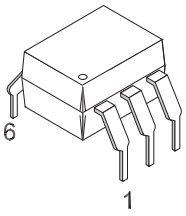

PDIP6
CASE 646BZ

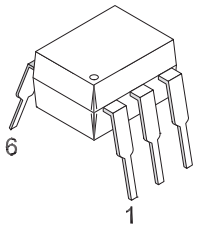

PDIP6
CASE 646BX

MARKING DIAGRAM

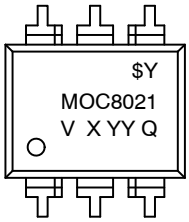

$Y	= Logo
MOC8021	= Device Code
V	= DIN EN/IEC60747−5−5 Option (only appears on component ordered with this option)
X	= One−Digit Year Code, e.g., “5”
YY	= Digit Work Week, Ranging from “01” to “53”
Q	= Assembly Package Code

ORDERING INFORMATION

See detailed ordering, marking and shipping information on page 7 of this data sheet.

NOTE: Some of the devices on this data sheet have been **DISCONTINUED**. Please refer to the table on page 7.

© Semiconductor Components Industries, LLC, 2000

Table 1. SAFETY AND INSULATION RATINGS

As per DIN EN/IEC 60747−5−5, this optocoupler is suitable for “safe electrical insulation” only within the safety limit data. Compliance with the safety ratings shall be ensured by means of protective circuits.

Parameter		Characteristics
Installation Classifications per DIN VDE 0110/1.89 Table 1, For Rated Mains Voltage	< 150 V_{RMS}	I–IV
	< 300 V_{RMS}	I–IV
Climatic Classification		55/100/21
Pollution Degree (DIN VDE 0110/1.89)		2
Comparative Tracking Index		175

Symbol	Parameter	Value	Unit
V_{PR}	Input−to−Output Test Voltage, Method A, V_{IORM} x 1.6 = V_{PR}, Type and Sample Test with t_m = 10 s, Partial Discharge < 5 pC	1360	V_{peak}
	Input−to−Output Test Voltage, Method B, V_{IORM} x 1.875 = V_{PR}, 100% Production Test with t_m = 1 s, Partial Discharge < 5 pC	1594	V_{peak}
V_{IORM}	Maximum Working Insulation Voltage	850	V_{peak}
V_{IOTM}	Highest Allowable Over−Voltage	6,000	V_{peak}
	External Creepage	≥ 7	mm
	External Clearance	≥ 7	mm
	External Clearance (for Option TV, 0.4″ Lead Spacing)	≥ 10	mm
DTI	Distance Through Insulation (Insulation Thickness)	≥ 0.5	mm
T_S	Case Temperature (Note 1)	175	°C
$I_{S,INPUT}$	Input Current (Note 1)	350	mA
$P_{S,OUTPUT}$	Output Power (Note 1)	800	mW
R_{IO}	Insulation Resistance at T_S, V_{IO} = 500 V (Note 1)	> 10^9	Ω

NOTE:

1. Safety limit values – maximum values allowed in the event of a failure.

Table 2. ABSOLUTE MAXIMUM RATINGS

Symbol	Parameter	Value	Units
TOTAL DEVICE			
T_{STG}	Storage Temperature	−40 to +125	°C
T_{OPR}	Operating Temperature	−40 to +100	°C
T_J	Junction Temperature	−40 to +125	°C
T_{SOL}	Lead Solder Temperature	260 for 10 seconds	°C
P_D	Total Device Power Dissipation @ T_A = 25°C	270	mW
	Derate above 25°C	2.94	mW/°C
EMITTER			
I_F	DC/Average Forward Input Current	60	mA
V_R	Reverse Input Voltage	3	V
P_D	LED Power Dissipation @ T_A = 25°C	120	mW
	Derate Above 25°C	1.41	mW/°C
DETECTOR			
I_C	Continuous Collector Current	150	mA
V_{CEO}	Collector−Emitter Voltage – MOC8021M	50	V
	Collector−Emitter Voltage – MOC8050M	80	V
P_D	Detector Power Dissipation @ T_A = 25°C	150	mW
	Derate Above 25°C	1.76	mW/°C

Stresses exceeding those listed in the Maximum Ratings table may damage the device. If any of these limits are exceeded, device functionality should not be assumed, damage may occur and reliability may be affected.

Table 3. ELECTRICAL CHARACTERISTICS T_A = 25°C unless otherwise specified

Symbol	Parameter	Test Conditions	Min	Typ	Max	Units
EMITTER						
V_F	Input Forward Voltage	I_F = 10 mA		1.18	2.00	V
I_R	Reverse Leakage Current	V_R = 3.0 V		0.001	10	μA
DETECTOR						
BV_{CEO}	Collector−Emitter Breakdown Voltage (MOC8021M)	I_C = 1.0 mA, I_F = 0	50	100		V
	(MOC8050M)		80	100		V
BV_{ECO}	Emitter−Collector Breakdown Voltage	I_E = 100 μA, I_F = 0	5	10		V
I_{CEO}	Collector−Emitter Dark Current	V_{CE} = 60 V, I_F = 0			1	μA
C_{CE}	Capacitance	V_{CE} = 0 V, f = 1 MHz		8		pF

Table 4. TRANSFER CHARACTERISTICS T_A = 25°C unless otherwise specified

Symbol	Parameter	Test Conditions	Min	Typ	Max	Units
DC CHARACTERISTICS						
CTR	Current Transfer Ratio, Collector−to−Emitter (MOC8021M)	I_F = 10 mA, V_{CE} = 5 V	1,000			%
	(MOC8050M)	I_F = 10 mA, V_{CE} = 1.5 V	500			%
AC CHARACTERISTICS						
t_{on}	Turn−on Time	I_F = 5 mA, V_{CC} = 10 V, R_L = 100 Ω		8.5		μs
t_{off}	Turn−off Time	I_F = 5 mA, V_{CC} = 10 V, R_L = 100 Ω		95		μs

Table 5. ISOLATION CHARACTERISTICS

Symbol	Parameter	Test Conditions	Min	Typ	Max	Units
V_{ISO}	Input−Output Isolation Voltage	t = 1 Minute	4170			VAC_{RMS}
C_{ISO}	Isolation Capacitance	V_{I-O} = 0 V, f = 1 MHz		0.2		pF
R_{ISO}	Isolation Resistance	V_{I-O} = ±500 VDC, T_A = 25°C	10^{11}			Ω

Product parametric performance is indicated in the Electrical Characteristics for the listed test conditions, unless otherwise noted. Product performance may not be indicated by the Electrical Characteristics if operated under different conditions.

TYPICAL CHARACTERISTICS

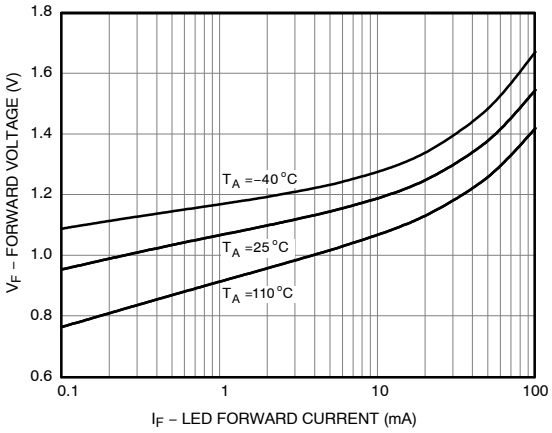

Figure 1. LED Forward Voltage vs. Forward Current

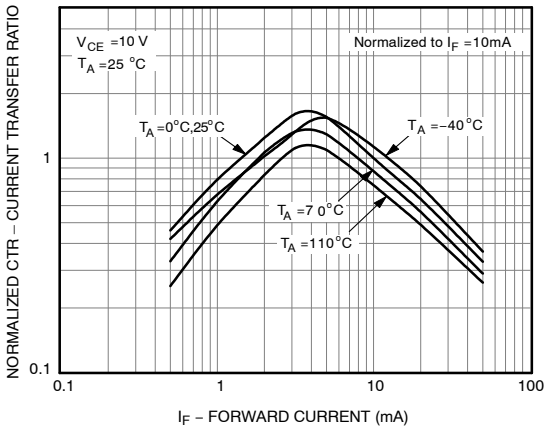

Figure 2. Normalized CTR vs. Forward Current

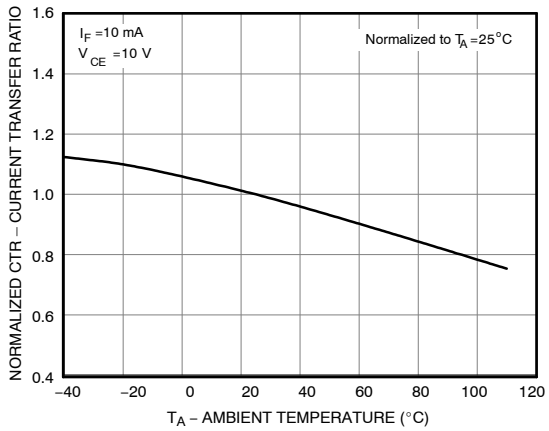

Figure 3. Normalized CTR vs. Ambient Temperature

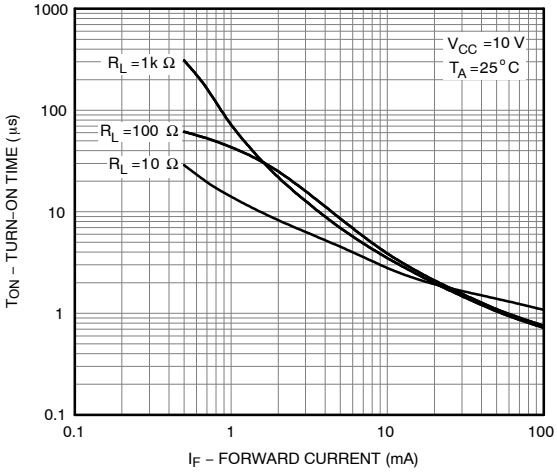

Figure 4. Turn–on Time vs. Forward Current

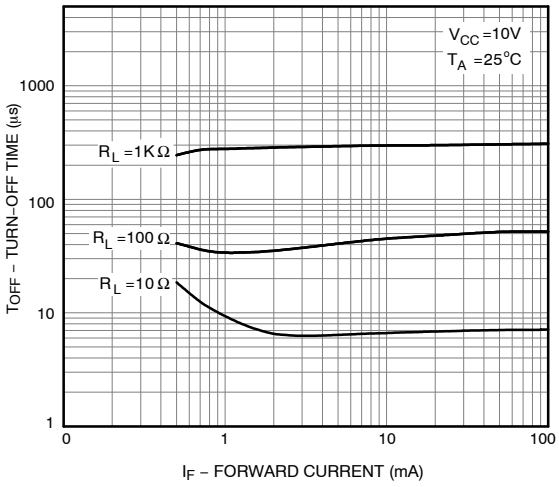

Figure 5. Turn–off Time vs. Forward Current

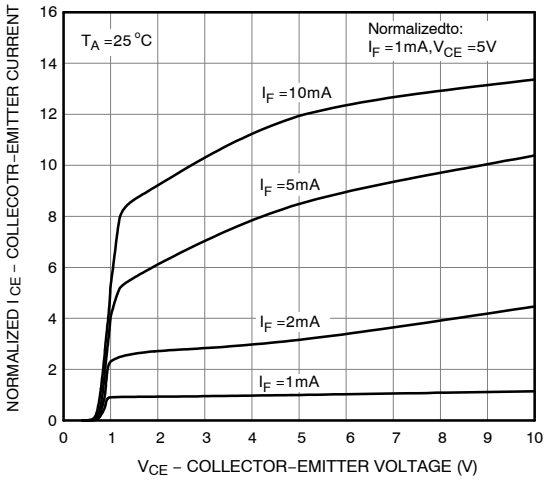

Figure 6. Normalized Collector–Emitter Current vs. Collector–Emitter Voltage

Typical Performance Curves (Continued)

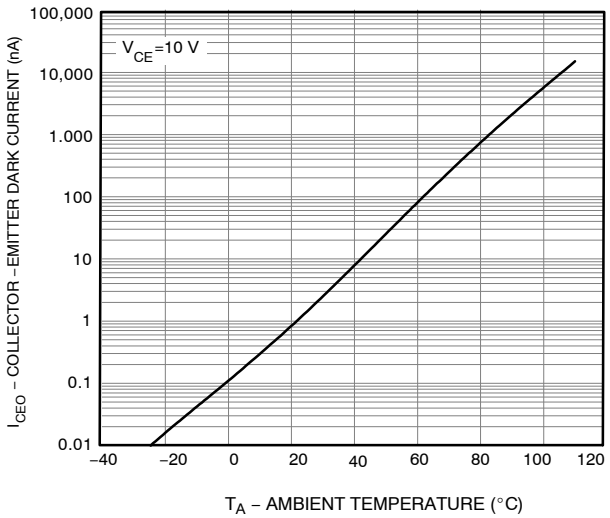

Figure 7. Dark Current vs. Ambient Temperature

Switching Time Test Circuit and Waveform

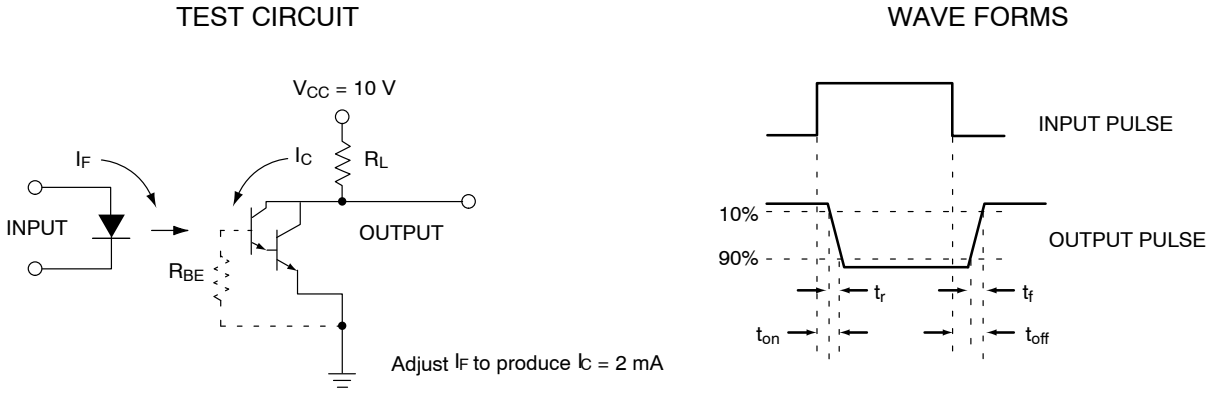

Figure 8. Switching Time Test Circuit and Waveform

REFLOW PROFILE

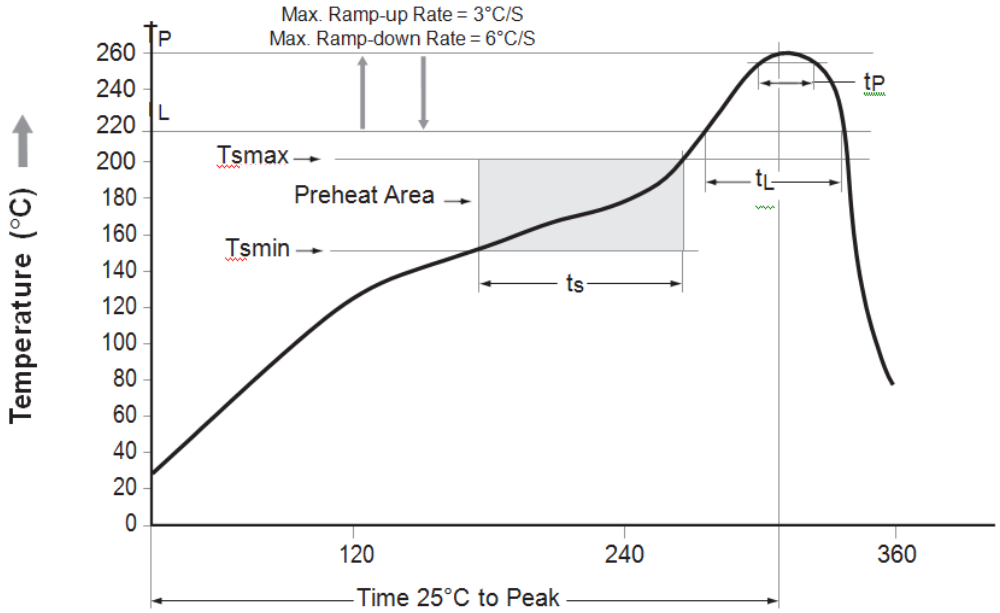

Figure 9. Reflow Profile

Profile Freature	Pb – Free Assembly Profile
Temperature Min. (Tsmin)	150°C
Temperature Max. (Tsmax)	200°C
Time (t_S) from (Tsmin to Tsmax)	60–120 seconds
Ramp – up Rate (t_L to t_P)	3°C/second max.
Liquidous Temperature (T_L)	217°C
Time (t_L) Maintained Above (T_L)	60–150 seconds
Peak Body Package Temperature	260°C +0°C / –5°C
Time (t_P) within 5°C of 260°C	30 seconds
Ramp – down Rate (T_P to T_L)	6°C / second max.
Time 25°C to Peak Temperature	8 minutes max.

ORDERING INFORMATION

Device Order Number	Package	Packing Method†
MOC8021M	DIP 6−Pin	Tube (50 Units)
MOC8021SM	SMT 6−Pin (Lead Bend)	Tube (50 Units)

DISCONTINUED (Note 3)

MOC8021SR2M	SMT 6−Pin (Lead Bend)	Tape and Reel (1000 Units)
MOC8021VM	DIP 6−Pin, DIN EN/IEC60747−5−5 Option	Tube (50 Units)
MOC8021SVM	SMT 6−Pin (Lead Bend), DIN EN/IEC60747−5−5 Option	Tube (50 Units)
MOC8021SR2VM	SMT 6−Pin (Lead Bend), DIN EN/IEC60747−5−5 Option	Tape and Reel (1000 Units)
MOC8021TVM	DIP 6−Pin, 0.4” Lead Spacing, DIN EN/IEC60747−5−5 Option	Tube (50 Units)

†For information on tape and reel specifications, including part orientation and tape sizes, please refer to our Tape and Reel Packaging Specification Brochure, BRD8011/D.

NOTES:

2. The product orderable part number system listed in this table also applies to the MOC8050M device.
3. **DISCONTINUED:** These devices are not recommended for new design. Please contact your **onsemi** representative for information. The most current information on these devices may be available on www.onsemi.com.

PDIP6 8.51x6.35, 2.54P
CASE 646BX
ISSUE O

DATE 31 JUL 2016

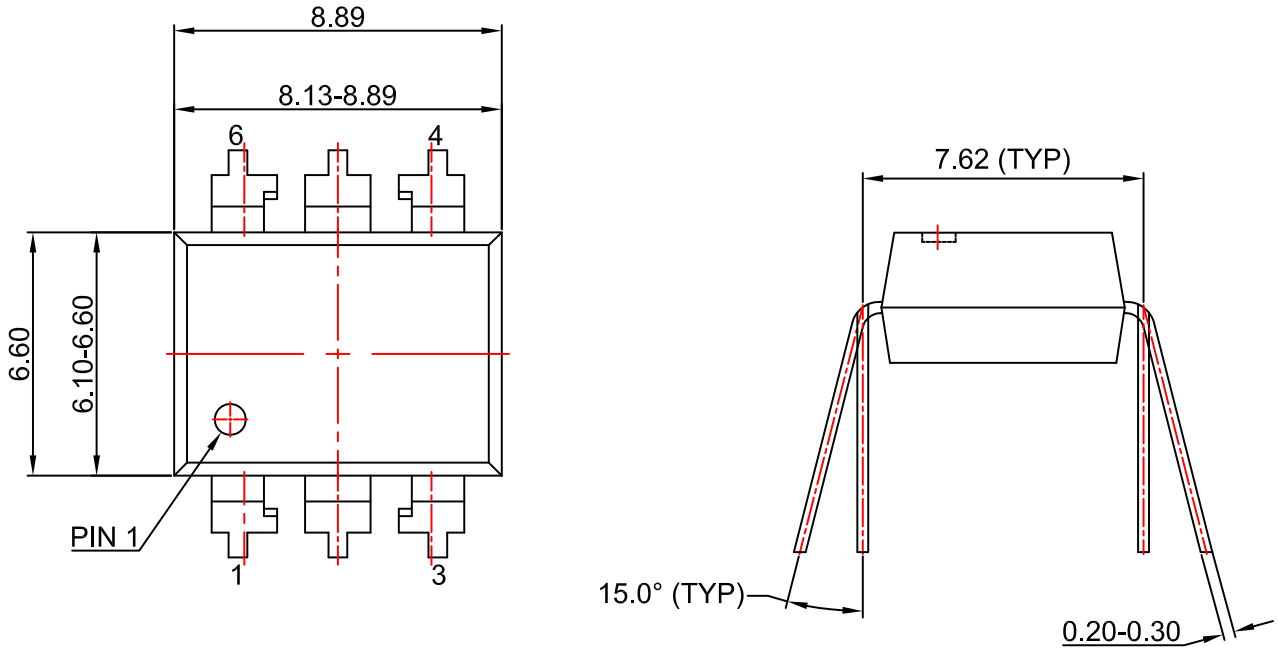

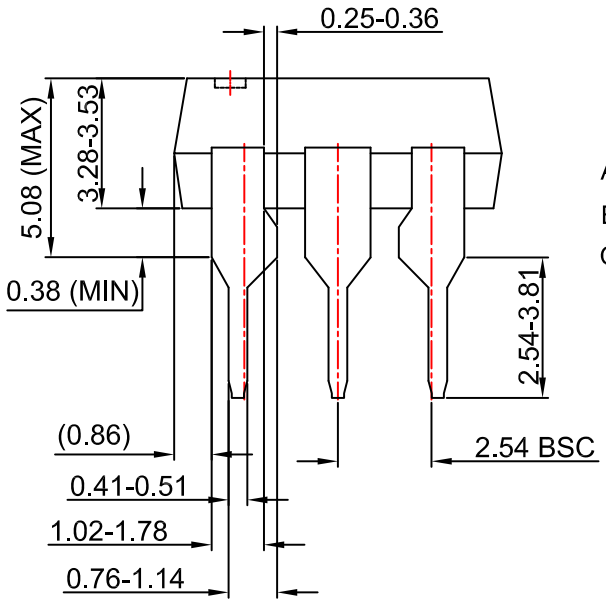

NOTES:

A) NO STANDARD APPLIES TO THIS PACKAGE.

B) ALL DIMENSIONS ARE IN MILLIMETERS.

C) DIMENSIONS ARE EXCLUSIVE OF BURRS, MOLD FLASH, AND TIE BAR EXTRUSION

DOCUMENT NUMBER:	**98AON13449G**	Electronic versions are uncontrolled except when accessed directly from the Document Repository. Printed versions are uncontrolled except when stamped "CONTROLLED COPY" in red.
DESCRIPTION:	**PDIP6 8.51X6.35, 2.54P**	**PAGE 1 OF 1**

onsemi and onsemi are trademarks of Semiconductor Components Industries, LLC dba **onsemi** or its subsidiaries in the United States and/or other countries. **onsemi** reserves the right to make changes without further notice to any products herein. **onsemi** makes no warranty, representation or guarantee regarding the suitability of its products for any particular purpose, nor does **onsemi** assume any liability arising out of the application or use of any product or circuit, and specifically disclaims any and all liability, including without limitation special, consequential or incidental damages. **onsemi** does not convey any license under its patent rights nor the rights of others.

PDIP6 8.51x6.35, 2.54P
CASE 646BY
ISSUE A

DATE 15 JUL 2019

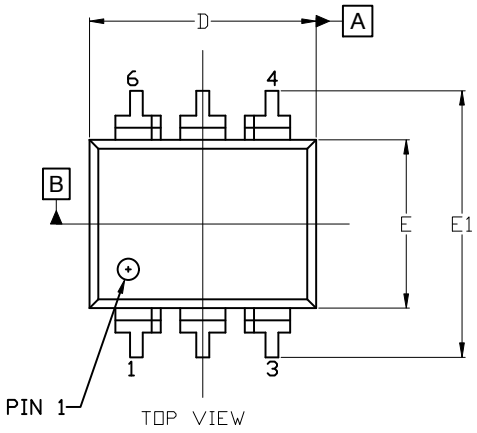

NOTES:
1. DIMENSIONING AND TOLERANCING PER ASME Y14.5M, 2009.
2. CONTROLLING DIMENSION: MILLIMETERS
3. DIMENSIONS A, A1, AND L ARE MEASURED WITH THE PACKAGE SEATED.
4. DIMENSIONS D, D1, AND E1 DO NOT INCLUDE MOLD FLASH OR PROTRUSIONS. MOLD FLASH OR PROTRUSIONS ARE NOT TO EXCEED 2.54mm.
5. PACKAGE CONTOUR IS OPTIONAL (ROUNDED OR SQUARE CORNERS).
6. CENTER LINE OF CORNER LEADS ARE LOCATED BY LOCATING THE CENTER OF FEATURE b2 AND b3.

DIM	MILLIMETERS		
	MIN.	NOM.	MAX.
A	---	---	4.80
A1	0.38	---	---
A2	3.28	3.40	3.53
A3	2.49 REF		
A4	1.89 REF		
b	0.41	0.46	0.51
b1	0.76	0.92	1.14
b2	0.25	0.28	0.36
b3	1.02	1.40	1.78
b4	1.778 REF		
c	0.20	0.25	0.30
D	8.13	8.51	8.89
D1	0.86 REF		
E	6.10	6.35	6.60
E1	8.43	9.17	9.90
E2	8.13 REF		
e	2.54 BSC		
L	0.16	0.52	0.88

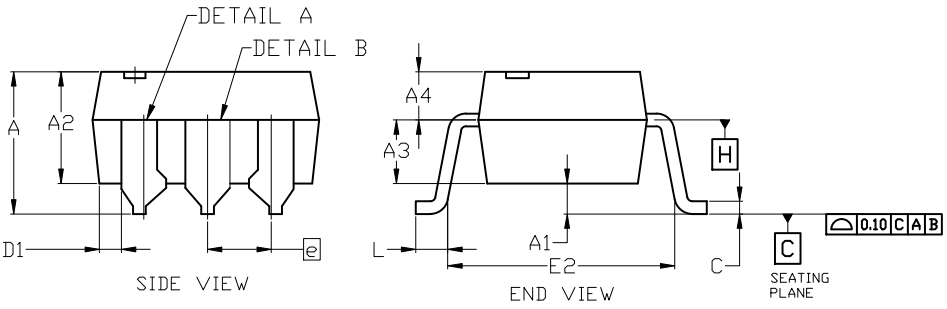

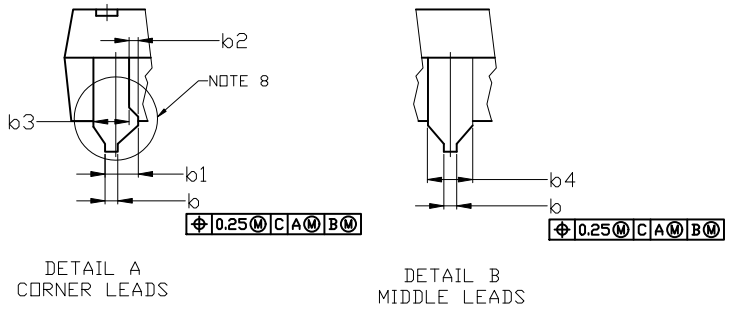

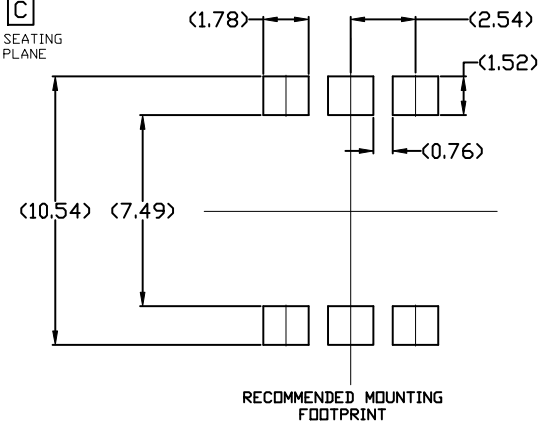

* For additional information on our Pb-Free strategy and soldering details, please download the ON Semiconductor Soldering and Mounting Techniques Reference Manual, SOLDERRM/D.

DOCUMENT NUMBER:	**98AON13450G**	Electronic versions are uncontrolled except when accessed directly from the Document Repository. Printed versions are uncontrolled except when stamped "CONTROLLED COPY" in red.
DESCRIPTION:	**PDIP6 8.51x6.35, 2.54P**	**PAGE 1 OF 1**

onsemi and onsemi are trademarks of Semiconductor Components Industries, LLC dba **onsemi** or its subsidiaries in the United States and/or other countries. **onsemi** reserves the right to make changes without further notice to any products herein. **onsemi** makes no warranty, representation or guarantee regarding the suitability of its products for any particular purpose, nor does **onsemi** assume any liability arising out of the application or use of any product or circuit, and specifically disclaims any and all liability, including without limitation special, consequential or incidental damages. **onsemi** does not convey any license under its patent rights nor the rights of others.

© Semiconductor Components Industries, LLC, 2016

PDIP6 8.51x6.35, 2.54P
CASE 646BZ
ISSUE O

DATE 31 JUL 2016

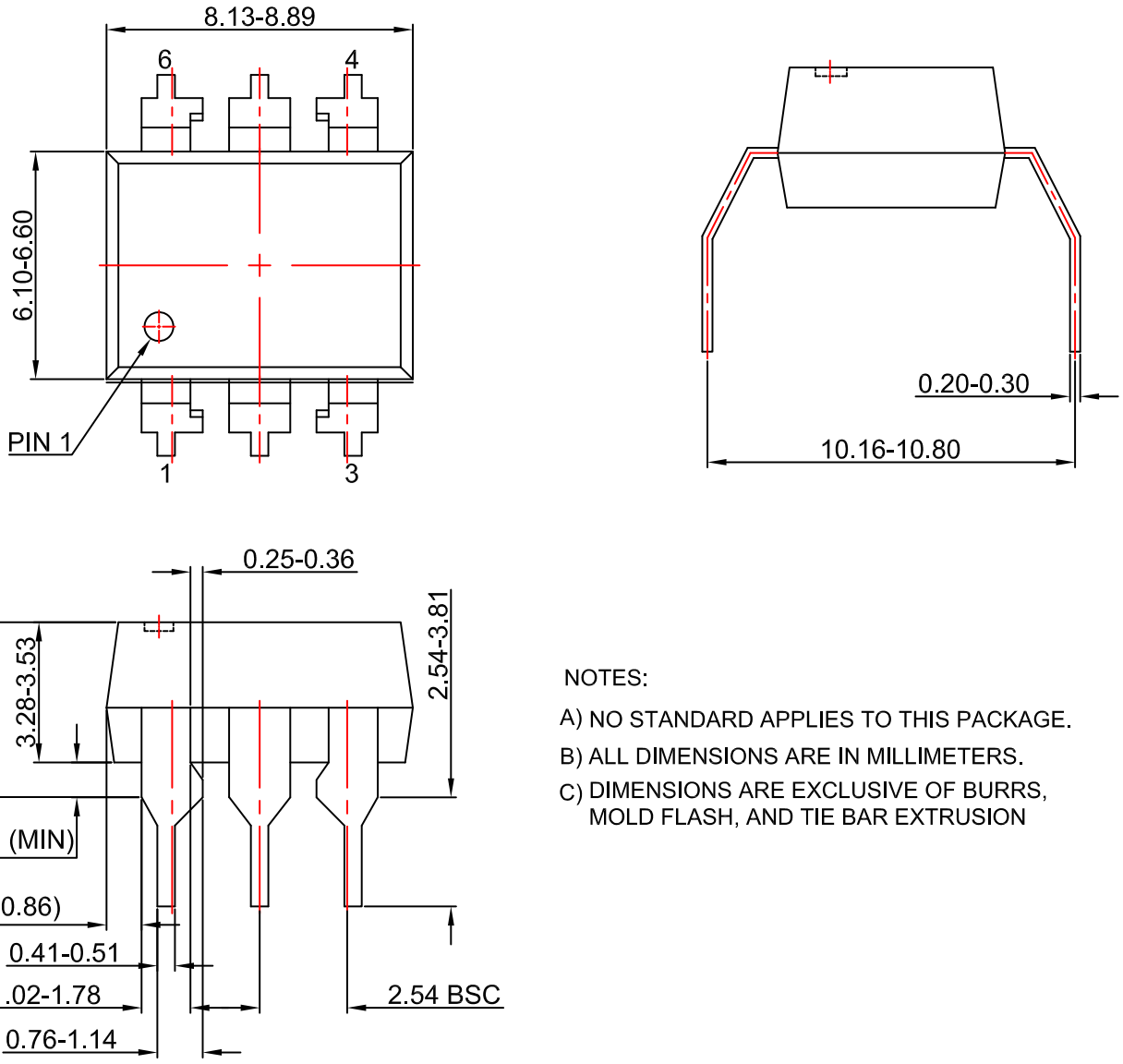

NOTES:

A) NO STANDARD APPLIES TO THIS PACKAGE.

B) ALL DIMENSIONS ARE IN MILLIMETERS.

C) DIMENSIONS ARE EXCLUSIVE OF BURRS, MOLD FLASH, AND TIE BAR EXTRUSION

DOCUMENT NUMBER:	**98AON13451G**	Electronic versions are uncontrolled except when accessed directly from the Document Repository. Printed versions are uncontrolled except when stamped "CONTROLLED COPY" in red.
DESCRIPTION:	**PDIP6 8.51X6.35, 2.54P**	**PAGE 1 OF 1**

onsemi and onsemi are trademarks of Semiconductor Components Industries, LLC dba **onsemi** or its subsidiaries in the United States and/or other countries. **onsemi** reserves the right to make changes without further notice to any products herein. **onsemi** makes no warranty, representation or guarantee regarding the suitability of its products for any particular purpose, nor does **onsemi** assume any liability arising out of the application or use of any product or circuit, and specifically disclaims any and all liability, including without limitation special, consequential or incidental damages. **onsemi** does not convey any license under its patent rights nor the rights of others.

onsemi, , and other names, marks, and brands are registered and/or common law trademarks of Semiconductor Components Industries, LLC dba "**onsemi**" or its affiliates and/or subsidiaries in the United States and/or other countries. **onsemi** owns the rights to a number of patents, trademarks, copyrights, trade secrets, and other intellectual property. A listing of **onsemi**'s product/patent coverage may be accessed at www.onsemi.com/site/pdf/Patent−Marking.pdf. **onsemi** reserves the right to make changes at any time to any products or information herein, without notice. The information herein is provided "as−is" and **onsemi** makes no warranty, representation or guarantee regarding the accuracy of the information, product features, availability, functionality, or suitability of its products for any particular purpose, nor does **onsemi** assume any liability arising out of the application or use of any product or circuit, and specifically disclaims any and all liability, including without limitation special, consequential or incidental damages. Buyer is responsible for its products and applications using **onsemi** products, including compliance with all laws, regulations and safety requirements or standards, regardless of any support or applications information provided by **onsemi**. "Typical" parameters which may be provided in **onsemi** data sheets and/or specifications can and do vary in different applications and actual performance may vary over time. All operating parameters, including "Typicals" must be validated for each customer application by customer's technical experts. **onsemi** does not convey any license under any of its intellectual property rights nor the rights of others. **onsemi** products are not designed, intended, or authorized for use as a critical component in life support systems or any FDA Class 3 medical devices or medical devices with a same or similar classification in a foreign jurisdiction or any devices intended for implantation in the human body. Should Buyer purchase or use **onsemi** products for any such unintended or unauthorized application, Buyer shall indemnify and hold **onsemi** and its officers, employees, subsidiaries, affiliates, and distributors harmless against all claims, costs, damages, and expenses, and reasonable attorney fees arising out of, directly or indirectly, any claim of personal injury or death associated with such unintended or unauthorized use, even if such claim alleges that **onsemi** was negligent regarding the design or manufacture of the part. **onsemi** is an Equal Opportunity/Affirmative Action Employer. This literature is subject to all applicable copyright laws and is not for resale in any manner.

ADDITIONAL INFORMATION

TECHNICAL PUBLICATIONS:
Technical Library: www.onsemi.com/design/resources/technical−documentation
onsemi Website: www.onsemi.com

ONLINE SUPPORT: www.onsemi.com/support
For additional information, please contact your local Sales Representative at www.onsemi.com/support/sales