MT9M113PACSTCH-GEVB

MT9M113 Evaluation Board User's Manual

ON Semiconductor®

www.onsemi.com

EVAL BOARD USER'S MANUAL

Evaluation Board Overview

The evaluation boards are designed to demonstrate the features of ON Semiconductor's image sensors products. This headboard is intended to plug directly into the Demo 2X system. Test points and jumpers on the board provide access to clock, I/Os and other miscellaneous signals.

Features

- Clock Input
  - Default – 10 MHz crystal oscillator
  - Optional Demo 2X controlled MClk
- Two Wire Serial Interface
  - Selectable base address
- Parallel Interface
- MIPI Interface
- ROHS Compliant

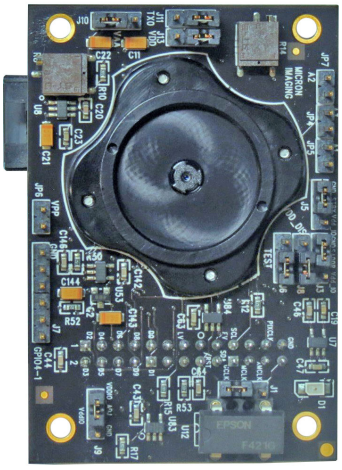

Figure 1. MT9M113 Evaluation Board

Block Diagram

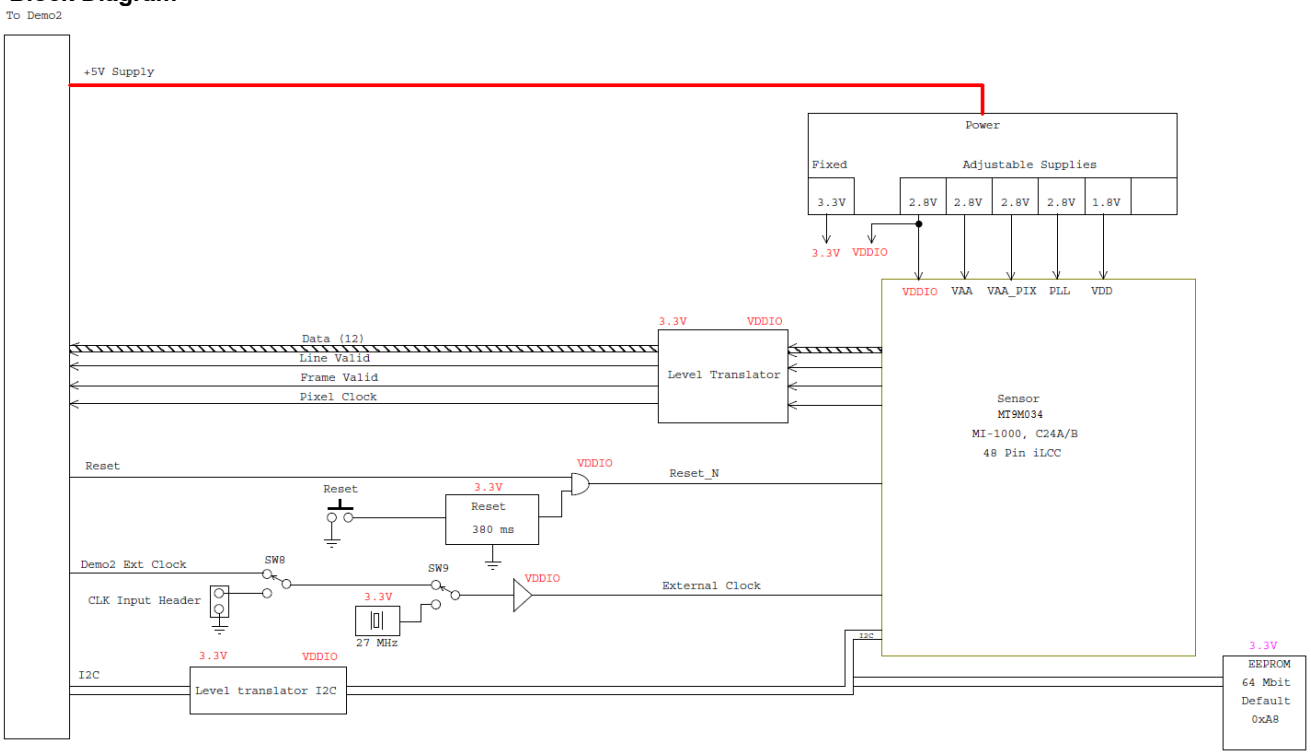

Figure 2. Block Diagram of MT9M113PACSTCH−GEVB

© Semiconductor Components Industries, LLC, 2016

Top View

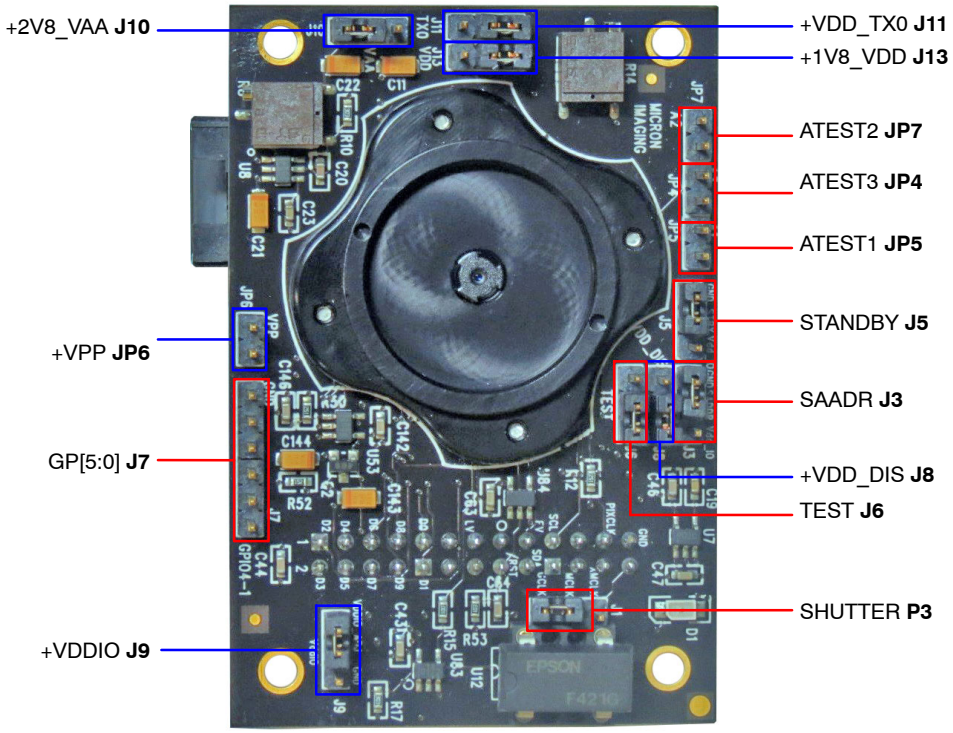

Figure 3. Top View of Evaluation Board − Default Jumpers

Bottom View

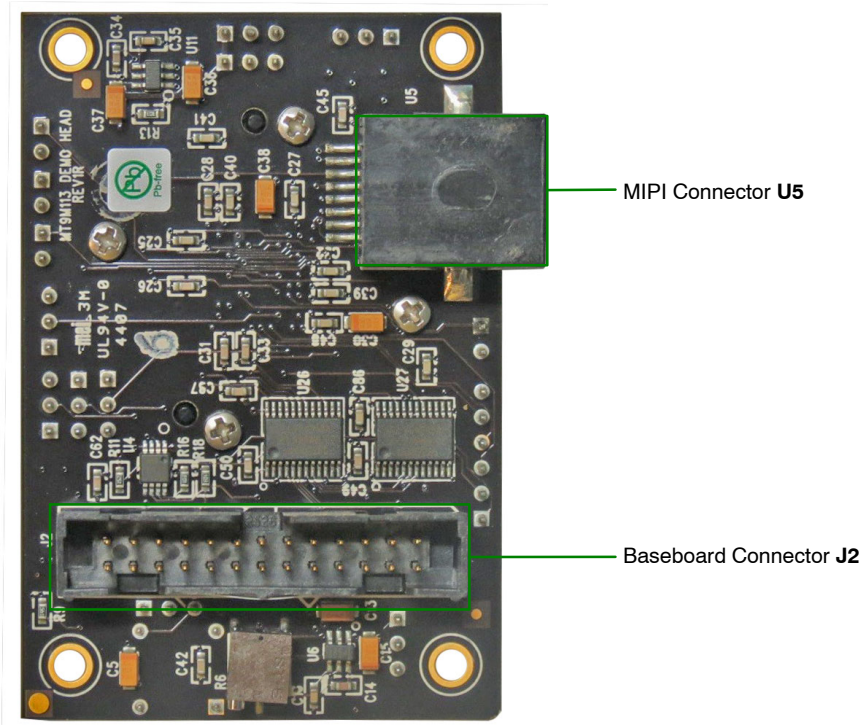

Figure 4. Bottom View of the Evaluation Board − Connector

Jumper Pin Locations

The jumpers on headboards start with Pin 1 on the leftmost side of the pin. Grouped jumpers increase in pin size with each jumper added.

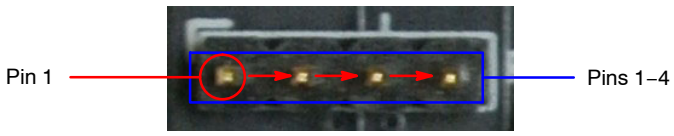

Figure 5. Pin Locations for a Single Jumper.
Pin 1 is Located at the Leftmost Side and Increases as it Moves to the Right

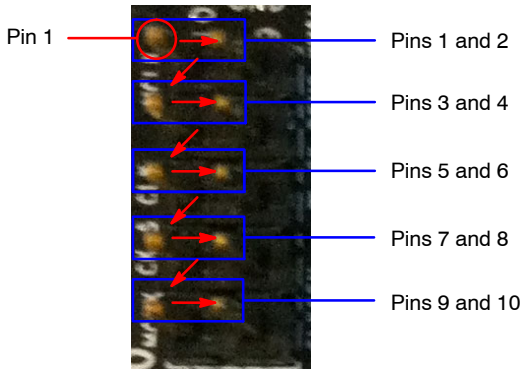

Figure 6. Pin Locations and Assignments of Grouped Jumpers.
Pin 1 is Located at the Top-Left Corner and Increases in a Zigzag Fashion Shown in the Picture

Jumper/Header Functions & Default Positions

Table 1. JUMPERS AND HEADERS

Jumper/Header No.	Jumper/Header Name	Pins	Description
J1	CLK_SELECT	2−3 (Default)	Connects to on-board oscillator
		1−2	Connects to XMCLK from Demo 2X Board
J3	SADDR	1−2 (Default)	I^2C Address set to 0x78
		2−3	I^2C Address set to 0x7A
J5	STANDBY	1−2 (Default)	Normal operation
		2−3	Sensor standby mode
J6	TEST	2−3 (Default)	Normal operation
		1−2	Test mode
J7	GP[5:0]	Open (Default)	For connection to various sensor's settings
J8	+VDD_DIS	2−3 (Default)	Normal operation
		1−2	Connects to on-board +VDDIO power supply
J9	+VDDIO	1−2 (Default)	Connects to on-board +VDDIO power supply
		2−3	External power supply connection
J10	+2V8_VAA	1−2 (Default)	Connects to on-board +2V8_VAA power supply
		2−3	External power supply connection
J11	+VDD_TX0	1−2 (Default)	Connects to on-board +VDD_TX0 power supply
		2−3	External power supply connection

Table 1. JUMPERS AND HEADERS (continued)

Jumper/Header No.	Jumper/Header Name	Pins	Description
J13	+1V8_VDD	1−2 (Default)	Connects to on-board +1V8_VDD power supply
		2−3	External power supply connection
JP4	ATEST3	Open (Default)	For Debug/Test
JP5	ATEST1	Open (Default)	For Debug/Test
JP6	+VPP	Open (Default)	For connection to external +VPP power supply for OTPM
JP7	ATEST2	Open (Default)	For Debug/Test

Interfacing to ON Semiconductor Demo 2X Baseboard

The ON Semiconductor Demo 2X baseboard has a similar 26-pin connector which mates with J2 of the headboard. The four mounting holes secure the baseboard and the headboard with spacers and screws.

onsemi, ONSEMI, and other names, marks, and brands are registered and/or common law trademarks of Semiconductor Components Industries, LLC dba "**onsemi**" or its affiliates and/or subsidiaries in the United States and/or other countries. **onsemi** owns the rights to a number of patents, trademarks, copyrights, trade secrets, and other intellectual property. A listing of **onsemi**'s product/patent coverage may be accessed at www.onsemi.com/site/pdf/Patent−Marking.pdf. **onsemi** is an Equal Opportunity/Affirmative Action Employer. This literature is subject to all applicable copyright laws and is not for resale in any manner.

The evaluation board/kit (research and development board/kit) (hereinafter the "board") is not a finished product and is not available for sale to consumers. The board is only intended for research, development, demonstration and evaluation purposes and will only be used in laboratory/development areas by persons with an engineering/technical training and familiar with the risks associated with handling electrical/mechanical components, systems and subsystems. This person assumes full responsibility/liability for proper and safe handling. Any other use, resale or redistribution for any other purpose is strictly prohibited.

THE BOARD IS PROVIDED BY ONSEMI TO YOU "AS IS" AND WITHOUT ANY REPRESENTATIONS OR WARRANTIES WHATSOEVER. WITHOUT LIMITING THE FOREGOING, ONSEMI (AND ITS LICENSORS/SUPPLIERS) HEREBY DISCLAIMS ANY AND ALL REPRESENTATIONS AND WARRANTIES IN RELATION TO THE BOARD, ANY MODIFICATIONS, OR THIS AGREEMENT, WHETHER EXPRESS, IMPLIED, STATUTORY OR OTHERWISE, INCLUDING WITHOUT LIMITATION ANY AND ALL REPRESENTATIONS AND WARRANTIES OF MERCHANTABILITY, FITNESS FOR A PARTICULAR PURPOSE, TITLE, NON−INFRINGEMENT, AND THOSE ARISING FROM A COURSE OF DEALING, TRADE USAGE, TRADE CUSTOM OR TRADE PRACTICE.

onsemi reserves the right to make changes without further notice to any board.

You are responsible for determining whether the board will be suitable for your intended use or application or will achieve your intended results. Prior to using or distributing any systems that have been evaluated, designed or tested using the board, you agree to test and validate your design to confirm the functionality for your application. Any technical, applications or design information or advice, quality characterization, reliability data or other services provided by **onsemi** shall not constitute any representation or warranty by **onsemi**, and no additional obligations or liabilities shall arise from **onsemi** having provided such information or services.

onsemi products including the boards are not designed, intended, or authorized for use in life support systems, or any FDA Class 3 medical devices or medical devices with a similar or equivalent classification in a foreign jurisdiction, or any devices intended for implantation in the human body. You agree to indemnify, defend and hold harmless **onsemi**, its directors, officers, employees, representatives, agents, subsidiaries, affiliates, distributors, and assigns, against any and all liabilities, losses, costs, damages, judgments, and expenses, arising out of any claim, demand, investigation, lawsuit, regulatory action or cause of action arising out of or associated with any unauthorized use, even if such claim alleges that **onsemi** was negligent regarding the design or manufacture of any products and/or the board.

This evaluation board/kit does not fall within the scope of the European Union directives regarding electromagnetic compatibility, restricted substances (RoHS), recycling (WEEE), FCC, CE or UL, and may not meet the technical requirements of these or other related directives.

FCC WARNING − This evaluation board/kit is intended for use for engineering development, demonstration, or evaluation purposes only and is not considered by **onsemi** to be a finished end product fit for general consumer use. It may generate, use, or radiate radio frequency energy and has not been tested for compliance with the limits of computing devices pursuant to part 15 of FCC rules, which are designed to provide reasonable protection against radio frequency interference. Operation of this equipment may cause interference with radio communications, in which case the user shall be responsible, at its expense, to take whatever measures may be required to correct this interference.

onsemi does not convey any license under its patent rights nor the rights of others.

LIMITATIONS OF LIABILITY: **onsemi** shall not be liable for any special, consequential, incidental, indirect or punitive damages, including, but not limited to the costs of requalification, delay, loss of profits or goodwill, arising out of or in connection with the board, even if **onsemi** is advised of the possibility of such damages. In no event shall **onsemi**'s aggregate liability from any obligation arising out of or in connection with the board, under any theory of liability, exceed the purchase price paid for the board, if any.

The board is provided to you subject to the license and other terms per **onsemi**'s standard terms and conditions of sale. For more information and documentation, please visit www.onsemi.com.

ADDITIONAL INFORMATION

TECHNICAL PUBLICATIONS:
Technical Library: www.onsemi.com/design/resources/technical−documentation
onsemi Website: www.onsemi.com

ONLINE SUPPORT: www.onsemi.com/support
For additional information, please contact your local Sales Representative at www.onsemi.com/support/sales