2.5 V/3.3 V Any Level Positive Input to -2.5 V/-3.3 V LVNECL Output Translator

NB100LVEP91

ON Semiconductor®

www.onsemi.com

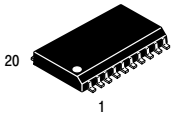

SOIC−20 WB
DW SUFFIX
CASE 751D−05

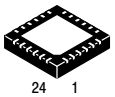

QFN−24
MN SUFFIX
CASE 485L−01

Description

The NB100LVEP91 is a triple any level positive input to NECL output translator. The device accepts LVPECL, LVTTL, LVCMOS, HSTL, CML or LVDS signals, and translates them to differential LVNECL output signals (−2.5 V/−3.3 V).

To accomplish the level translation the LVEP91 requires three power rails. The V_{CC} pins should be connected to the positive power supply, and the V_{EE} pin should be connected to the negative power supply. The GND pins are connected to the system ground plane. Both V_{EE} and V_{CC} should be bypassed to ground via 0.01 μF capacitors.

Under open input conditions, the $\overline{D}$ input will be biased at $V_{CC}/2$ and the D input will be pulled to GND. These conditions will force the Q outputs to a low state, and Q outputs to a high state, which will ensure stability.

The V_{BB} pin, an internally generated voltage supply, is available to this device only. For single-ended input conditions, the unused differential input is connected to V_{BB} as a switching reference voltage. V_{BB} may also rebias AC coupled inputs. When used, decouple V_{BB} and V_{CC} via a 0.01 μF capacitor and limit current sourcing or sinking to 0.5 mA. When not used, V_{BB} should be left open.

Features

- Maximum Input Clock Frequency > 2.0 GHz Typical
- Maximum Input Data Rate > 2.0 Gb/s Typical
- 500 ps Typical Propagation Delay
- Operating Range:
  - V_{CC} = 2.375 V to 3.8 V; V_{EE} = −2.375 V to −3.8 V; GND = 0 V
- Q Output will Default LOW with Inputs Open or at GND
- These Devices are Pb-Free, Halogen Free and are RoHS Compliant

MARKING DIAGRAMS*

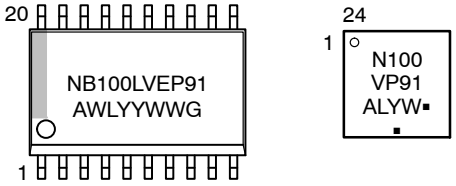

A = Assembly Location
WL, L = Wafer Lot
YY, Y = Year
WW, W = Work Week
G or ▪ = Pb-Free Package

(Note: Microdot may be in either location)

*For additional marking information, refer to Application Note AND8002/D.

ORDERING INFORMATION

Device	Package	Shipping†
NB100LVEP91DWG	SOIC−20 WB (Pb-Free)	38 Units/Tube
NB100LVEP91DWR2G	SOIC−20 WB (Pb-Free)	1000/Tape & Reel
NB100LVEP91MNG	QFN−24 (Pb-Free)	92 Units/Tube

†For information on tape and reel specifications, including part orientation and tape sizes, please refer to our Tape and Reel Packaging Specifications Brochure, BRD8011/D.

© Semiconductor Components Industries, LLC, 2016

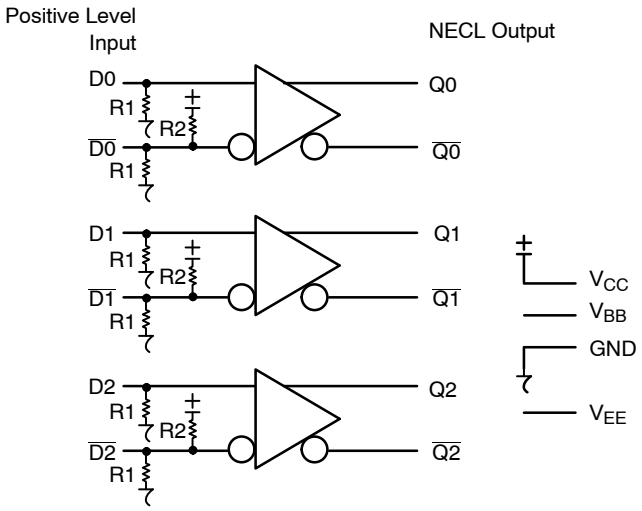

Figure 1. Logic Diagram

Table 1. PIN DESCRIPTION

Pin		Name	I/O	Default State	Description
SOIC	QFN				
1, 20	3, 4, 12	V_{CC}	–	–	Positive Supply Voltage. All V_{CC} Pins must be Externally Connected to Power Supply to Guarantee Proper Operation.
10	15, 16	V_{EE}	–	–	Negative Supply Voltage. All V_{EE} Pins must be Externally Connected to Power Supply to Guarantee Proper Operation.
14, 17	19, 20, 23, 24	GND	–	–	Ground.
4, 7	7, 11	V_{BB}	–	–	ECL Reference Voltage Output
2, 5, 8	5, 8, 13	D[0:2]	LVPECL, LVDS, LVTTL, LVCMOS, CML, HSTL Input	Low	Non-inverted Differential Inputs [0:2]. Internal 75 kΩ to GND.
3, 6, 9	6, 9, 14	$\overline{D[0:2]}$	LVPECL, LVDS, LVTTL,LVCMOS, CML, HSTL Input	High	Inverted Differential Inputs [0:2]. Internal 75 kΩ to GND and 75 kΩ to V_{CC}. When Inputs are Left Open They Default to (V_{CC} − GND) / 2.
19,16,13	2, 22, 18	Q[0:2]	LVNECL Output	–	Non-inverted Differential Outputs [0:2]. Typically Terminated with 50 Ω to $V_{TT} = V_{CC} - 2$ V
18,15,12	1, 21, 17	$\overline{Q[0:2]}$	LVNECL Output	–	Inverted Differential Outputs [0:2]. Typically Terminated with 50 Ω to $V_{TT} = V_{CC} - 2$ V
11	10	NC	–	–	No Connect. The NC Pin is NOT Electrically Connected to the Die and may Safely be Connected to Any Voltage from V_{EE} to V_{CC}.
N/A	–	EP	–		Exposed Pad. (Note 1)

1. The thermally conductive exposed pad on the package bottom (see case drawing) must be attached to a heat sinking conduit and may only be electrically connected to V_{EE} (not GND).

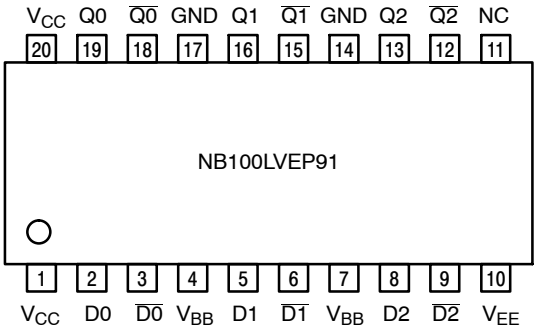

Figure 2. SOIC−20 WB Lead Pinout (Top View)*

*All V_{CC}, V_{EE} and GND pins must be externally connected to a power supply.

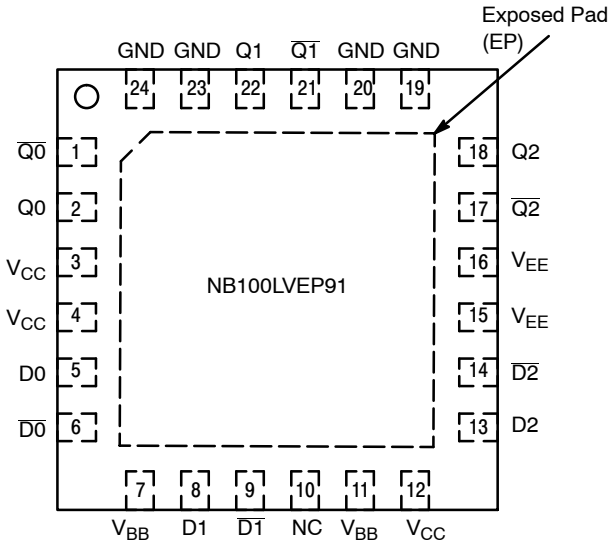

Figure 3. QFN−24 Lead Pinout (Top View)*

*All V_{CC}, V_{EE} and GND pins must be externally connected to a power supply. The thermally conductive exposed pad on the package bottom (see case drawing) must be attached to a sufficient heat-sinking conduit and may only be electronically connected to V_{EE} (not GND).

Table 2. ATTRIBUTES

Characteristics	Value
Internal Input Pulldown Resistor (R1)	75 kΩ
Internal Input Pullup Resistor (R2)	75 kΩ
ESD Protection Human Body Model Machine Model Charged Device Model	 > 2 kV > 150 V > 2 kV
Moisture Sensitivity (Note 1)	Pb-Free Pkg
SOIC−20 WB QFN−24	Level 3 Level 1
Flammability Rating Oxygen Index: 28 to 34	UL 94 V−0 @ 0.125 in
Transistor Count	446 Devices
Meets or exceeds JEDEC Spec EIA/JESD78 IC Latchup Test	

1. For additional information, see Application Note AND8003/D.

Table 3. MAXIMUM RATINGS

Symbol	Parameter	Condition 1	Condition 2	Rating	Unit
V_{CC}	Positive Power Supply	GND = 0 V		3.8 to 0	V
V_{EE}	Negative Power Supply	GND = 0 V		−3.8 to 0	V
V_I	Positive Input Voltage	GND = 0 V	$V_I \le V_{CC}$	3.8 to 0	V
V_{OP}	Operating Voltage	GND = 0 V	$V_{CC} - V_{EE}$	7.6 to 0	V
I_{out}	Output Current	Continuous Surge		50 100	mA
I_{BB}	PECL V_{BB} Sink/Source			±0.5	mA
T_A	Operating Temperature Range			−40 to +85	°C
T_{stg}	Storage Temperature Range			−65 to +150	°C
θ_{JA}	Thermal Resistance (Junction-to-Ambient) JESD 51−3 (1S-Single Layer Test Board)	0 lfpm 500 lfpm	SOIC−20 WB	90 60	°C/W
θ_{JA}	Thermal Resistance (Junction-to-Ambient) JESD 51−6 (2S2P Multilayer Test Board) with Filled Thermal Vias	0 lfpm 500 lfpm	QFN−24	37 32	°C/W
θ_{JC}	Thermal Resistance (Junction-to-Case)	Standard Board	SOIC−20 WB QFN−24	30 to 35 11	°C/W
T_{sol}	Wave Solder (Pb-Free)			225	°C

Stresses exceeding those listed in the Maximum Ratings table may damage the device. If any of these limits are exceeded, device functionality should not be assumed, damage may occur and reliability may be affected.

Table 4. DC CHARACTERISTICS POSITIVE INPUTS (V_{CC} = 2.5 V, V_{EE} = −2.375 to −3.8 V, GND = 0 V (Note 1))

		−40°C			25°C			85°C			
Symbol	Characteristic	Min	Typ	Max	Min	Typ	Max	Min	Typ	Max	Unit
I_{CC}	Positive Power Supply Current	10	14	20	10	14	20	10	14	20	mA
V_{IH}	Input HIGH Voltage (Single-Ended)	1335		V_{CC}	1335		V_{CC}	1335		V_{CC}	mV
V_{IL}	Input LOW Voltage (Single-Ended)	GND		875	GND		875	GND		875	mV
V_{IHCMR}	Input HIGH Voltage Common Mode Range (Differential Configuration) (Note 2)	0		2.5	0		2.5	0		2.5	V
I_{IH}	Input HIGH Current (@ V_{IH})			150			150			150	μA
I_{IL}	Input LOW Current (@ V_{IL}) D $\overline{D}$	 0.5 −150			 0.5 −150			 0.5 −150			μA

NOTE: Device will meet the specifications after thermal equilibrium has been established when mounted in a test socket or printed circuit board with maintained transverse airflow greater than 500 lfpm.

1. Input parameters vary 1:1 with V_{CC}. V_{CC} can vary +1.3 V / −0.125 V.
2. V_{IHCMR} min varies 1:1 with GND. V_{IHCMR} max varies 1:1 with V_{CC}.

Table 5. DC CHARACTERISTICS POSITIVE INPUT (V_{CC} = 3.3 V; V_{EE} = −2.375 V to −3.8 V; GND = 0 V (Note 1))

Symbol	Characteristic	−40°C			25°C			85°C			Unit
		Min	Typ	Max	Min	Typ	Max	Min	Typ	Max	
I_{CC}	Positive Power Supply Current	10	16	24	10	16	24	10	16	24	mA
V_{IH}	Input HIGH Voltage (Single-Ended)	2135		V_{CC}	2135		V_{CC}	2135		V_{CC}	mV
V_{IL}	Input LOW Voltage (Single-Ended)	GND		1675	GND		1675	GND		1675	mV
V_{BB}	PECL Output Voltage Reference	1775	1875	1975	1775	1875	1975	1775	1875	1975	mV
V_{IHCMR}	Input HIGH Voltage Common Mode Range (Differential Configuration) (Note 2)	0		3.3	0		3.3	0		3.3	V
I_{IH}	Input HIGH Current (@ V_{IH})			150			150			150	μA
I_{IL}	Input LOW Current (@ V_{IL}) D $\overline{D}$	 0.5 −150			 0.5 −150			 0.5 −150			μA

NOTE: Device will meet the specifications after thermal equilibrium has been established when mounted in a test socket or printed circuit board with maintained transverse airflow greater than 500 lfpm.

1. Input parameters vary 1:1 with V_{CC}. V_{CC} can vary +0.5 / −0.925 V.
2. V_{IHCMR} min varies 1:1 with GND. V_{IHCMR} max varies 1:1 with V_{CC}.

Table 6. DC CHARACTERISTICS NECL OUTPUT (V_{CC} = 2.375 V to 3.8 V; V_{EE} = −2.375 V to −3.8 V; GND = 0 V (Note 1))

Symbol	Characteristic	−40°C			25°C			85°C			Unit
		Min	Typ	Max	Min	Typ	Max	Min	Typ	Max	
I_{EE}	Negative Power Supply Current	40	50	60	38	50	68	38	50	68	mA
V_{OH}	Output HIGH Voltage (Note 2)	−1145	−1020	−895	−1145	−1020	−895	−1145	−1020	−895	mV
V_{OL}	Output LOW Voltage (Note 2)	−1945	−1770	−1600	−1945	−1770	−1600	−1945	−1770	−1600	mV

NOTE: Device will meet the specifications after thermal equilibrium has been established when mounted in a test socket or printed circuit board with maintained transverse airflow greater than 500 lfpm.

1. Output parameters vary 1:1 with GND.
2. All loading with 50 Ω resistor to GND − 2.0 V.

Table 7. AC CHARACTERISTICS (V_{CC} = 2.375 V to 3.8 V; V_{EE} = −2.375 V to −3.8 V; GND = 0 V)

Symbol	Characteristic	−40°C			25°C			85°C			Unit
		Min	Typ	Max	Min	Typ	Max	Min	Typ	Max	
V_{OUTPP}	Output Voltage Amplitude (Figure 4) (Note 1) f_{in} ⊥ ≀ 1.0 GHz f_{in} ⊥ ≀ 1.5 GHz f_{in} ⊥ ≀ 2.0 GHz	 575 525 300	 800 750 600		 600 525 250	 800 750 550		 550 400 150	 800 750 500		mV
t_{PLH} t_{PHL0}	Propagation Delay Differential D to Q Single-Ended	 375 300	 500 450	 600 650	 375 300	 500 450	 600 675	 400 300	 550 500	 650 750	ps
t_{SKEW}	Pulse Skew (Note 2) Output-to-Output (Note 3) Part-to-Part (Diff) (Note 3)		15 25 50	75 95 125		15 30 50	75 105 125		15 30 70	80 105 150	ps
t_{JITTER}	RMS Random Clock Jitter (Note 4) f_{in} = 2.0 GHz Peak-to-Peak Data Dependant Jitter (Note 5) f_{in} = 2.0 Gb/s		 0.5 20	 2.0 		 0.5 20	 2.0 		 0.5 20	 2.0 	ps
V_{INPP}	Input Voltage Swing (Differential Configuration) (Note 6)	200	800	1200	200	800	1200	200	800	1200	mV
t_r, t_f	Output Rise/Fall Times @ 50 MHz (20% − 80%) Q, $\overline{Q}$	75	150	250	75	150	250	75	150	275	ps

NOTE: Device will meet the specifications after thermal equilibrium has been established when mounted in a test socket or printed circuit board with maintained transverse airflow greater than 500 lfpm.

1. Measured using a 750 mV source, 50% duty cycle clock source. All loading with 50 Ω to GND − 2.0 V. Input edge rates 150 ps (20% − 80%).
2. Pulse Skew = $|t_{PLH} - t_{PHL}|$
3. Skews are valid across specified voltage range, part-to-part skew is for a given temperature.
4. RMS Jitter with 50% Duty Cycle Input Clock Signal.
5. Peak-to-Peak Jitter with input NRZ PRBS 2^{31-1} at 2.0 Gb/s.
6. Input voltage swing is a single-ended measurement operating in differential mode. The device has a DC gain of ≈ 50.

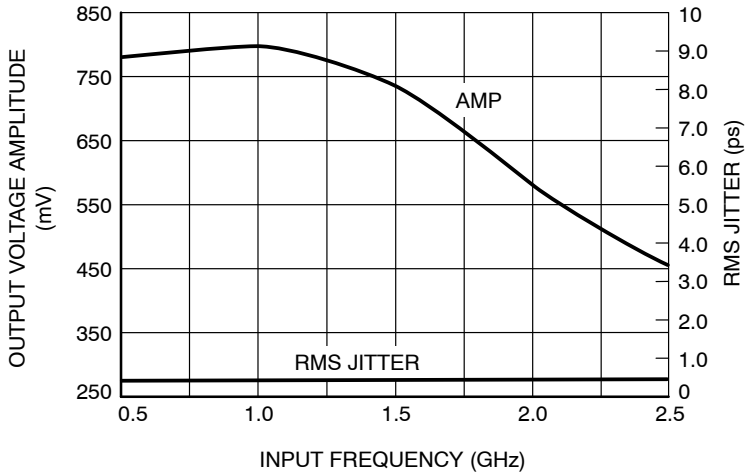

Figure 4. Output Voltage Amplitude (V_{OUTPP}) / RMS Jitter vs. Input Frequency (f_{in}) at Ambient Temperature (Typical)

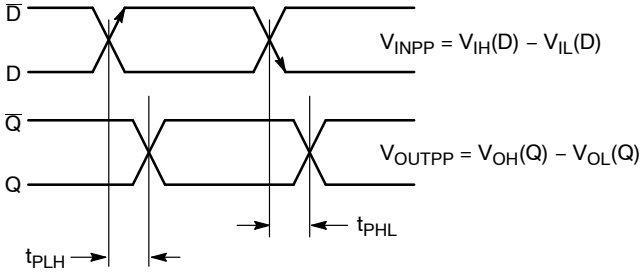

Figure 5. AC Reference Measurement

Application Information

All NB100LVEP91 inputs can accept LVPECL, LVTTL, LVCMOS, HSTL, CML, or LVDS signal levels. The limitations for differential input signal (LVDS, HSTL, LVPECL, or CML) are the minimum input swing of 150 mV and the maximum input swing of 3.0 V. Within these conditions, the input voltage can range from V_{CC} to GND. Examples interfaces are illustrated below in a 50 Ω environment (Z = 50 Ω)

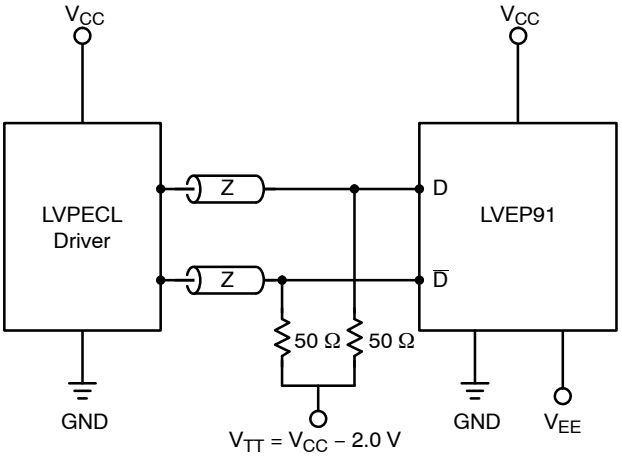

Figure 6. Standard LVPECL Interface

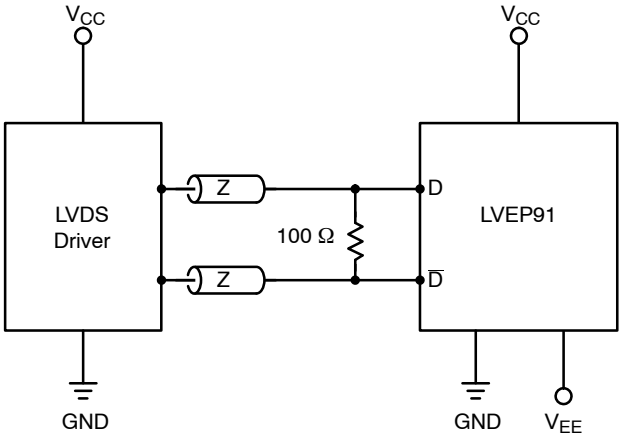

Figure 7. Standard LVDS Interface

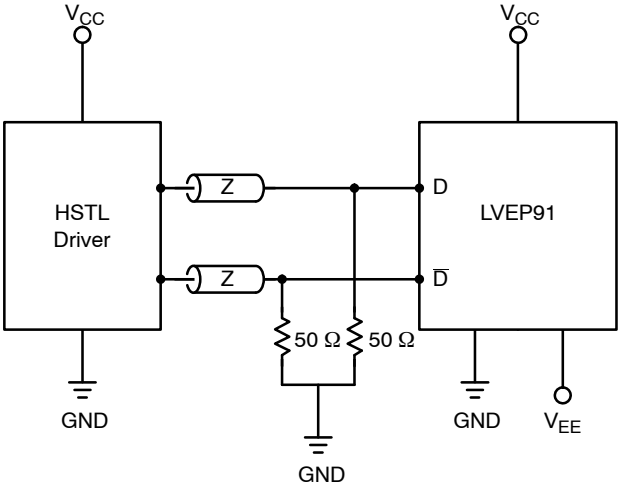

Figure 8. Standard HSTL Interface

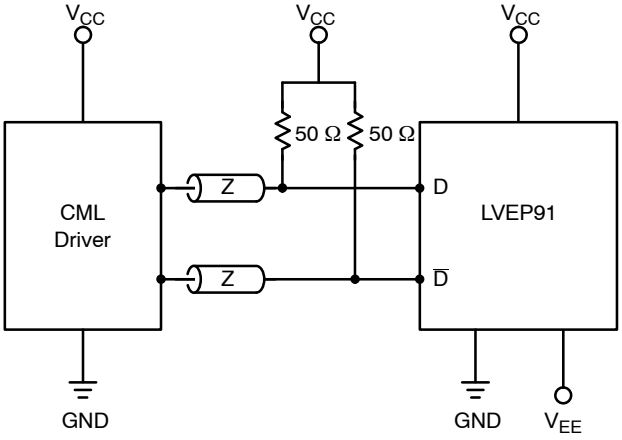

Figure 9. Standard 50 Ω Load CML Interface

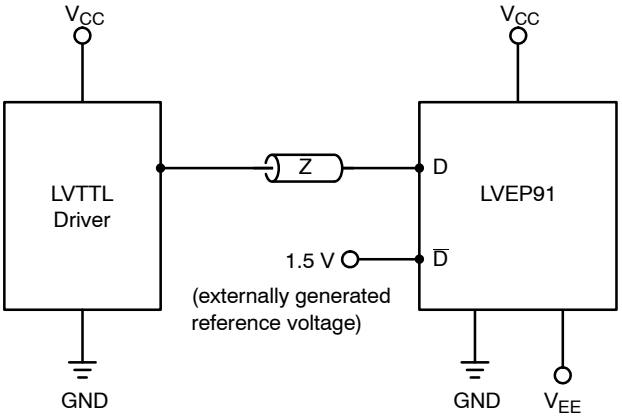

Figure 10. Standard LVTTL Interface

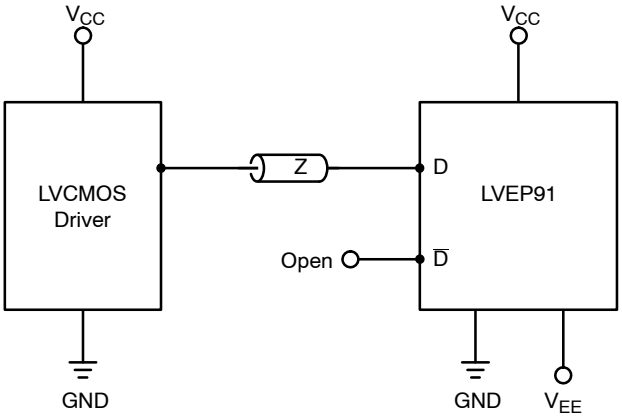

Figure 11. Standard LVCMOS Interface ($\overline{D}$ Will Default to V_{CC}/2 When Left Open. A Reference Voltage of V_{CC}/2 Should be Applied to D Input, if $\overline{D}$ is Interfaced to CMOS Signals.)

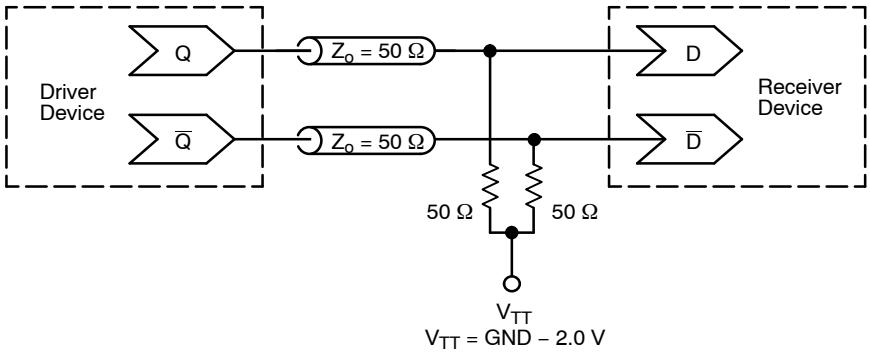

Figure 12. Typical Termination for Output Driver and Device Evaluation (See Application Note AND8020/D – Termination of ECL Logic Devices.)

Resource Reference of Application Notes

AN1405/D – ECL Clock Distribution Techniques

AN1406/D – Designing with PECL (ECL at +5.0 V)

AN1503/D – ECLinPS™ I/O SPiCE Modeling Kit

AN1504/D – Metastability and the ECLinPS Family

AN1568/D – Interfacing Between LVDS and ECL

AN1672/D – The ECL Translator Guide

AND8001/D – Odd Number Counters Design

AND8002/D – Marking and Date Codes

AND8020/D – Termination of ECL Logic Devices

AND8066/D – Interfacing with ECLinPS

AND8090/D – AC Characteristics of ECL Devices

ECLinPS is a trademark of Semiconductor Components Industries, LLC (SCILLC) or its subsidiaries in the United States and/or other countries.

MECHANICAL CASE OUTLINE
PACKAGE DIMENSIONS

ON Semiconductor®

QFN24, 4x4, 0.5P
CASE 485L
ISSUE B

DATE 05 JUN 2012

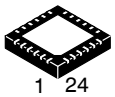

SCALE 2:1

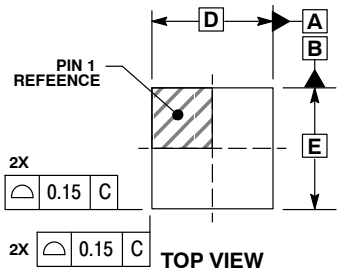

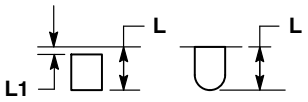

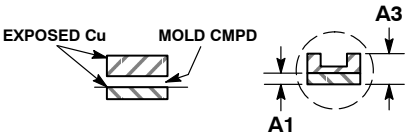

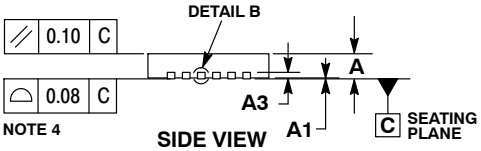

NOTES:
1. DIMENSIONING AND TOLERANCING PER ASME Y14.5M, 1994.
2. CONTROLLING DIMENSION: MILLIMETERS.
3. DIMENSION b APPLIES TO PLATED TERMINAL AND IS MEASURED BETWEEN 0.25 AND 0.30 MM FROM THE TERMINAL TIP.
4. COPLANARITY APPLIES TO THE EXPOSED PAD AS WELL AS THE TERMINALS.

	MILLIMETERS	
DIM	MIN	MAX
A	0.80	1.00
A1	0.00	0.05
A3	0.20 REF	
b	0.20	0.30
D	4.00 BSC	
D2	2.70	2.90
E	4.00 BSC	
E2	2.70	2.90
e	0.50 BSC	
L	0.30	0.50
L1	0.05	0.15

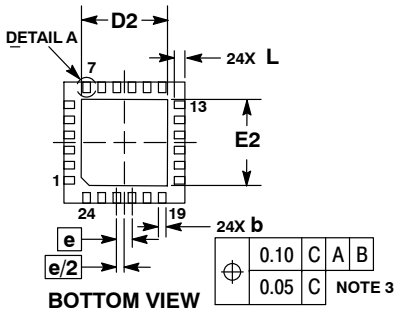

GENERIC MARKING DIAGRAM*



XXXXX = Specific Device Code
A = Assembly Location
L = Wafer Lot
Y = Year
W = Work Week
▪ = Pb−Free Package

(Note: Microdot may be in either location)

*This information is generic. Please refer to device data sheet for actual part marking. Pb−Free indicator, “G” or microdot “ ▪”, may or may not be present.

RECOMMENDED SOLDERING FOOTPRINT

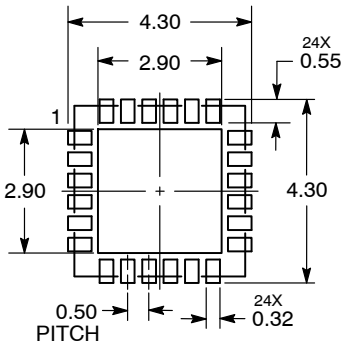

DIMENSIONS: MILLIMETERS

DOCUMENT NUMBER:	**98AON11783D**	Electronic versions are uncontrolled except when accessed directly from the Document Repository. Printed versions are uncontrolled except when stamped “CONTROLLED COPY” in red.	
DESCRIPTION:	**QFN24, 4X4, 0.5P**		**PAGE 1 OF 1**

ON Semiconductor and ON are trademarks of Semiconductor Components Industries, LLC dba ON Semiconductor or its subsidiaries in the United States and/or other countries. ON Semiconductor reserves the right to make changes without further notice to any products herein. ON Semiconductor makes no warranty, representation or guarantee regarding the suitability of its products for any particular purpose, nor does ON Semiconductor assume any liability arising out of the application or use of any product or circuit, and specifically disclaims any and all liability, including without limitation special, consequential or incidental damages. ON Semiconductor does not convey any license under its patent rights nor the rights of others.

© Semiconductor Components Industries, LLC, 2019

MECHANICAL CASE OUTLINE
PACKAGE DIMENSIONS

SOIC−20 WB
CASE 751D−05
ISSUE H

DATE 22 APR 2015

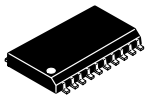

SCALE 1:1

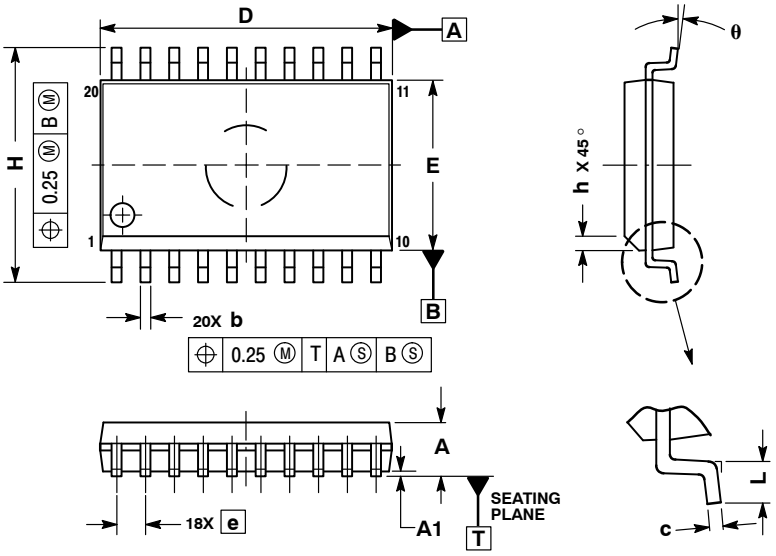

NOTES:
1. DIMENSIONS ARE IN MILLIMETERS.
2. INTERPRET DIMENSIONS AND TOLERANCES PER ASME Y14.5M, 1994.
3. DIMENSIONS D AND E DO NOT INCLUDE MOLD PROTRUSION.
4. MAXIMUM MOLD PROTRUSION 0.15 PER SIDE.
5. DIMENSION B DOES NOT INCLUDE DAMBAR PROTRUSION. ALLOWABLE PROTRUSION SHALL BE 0.13 TOTAL IN EXCESS OF B DIMENSION AT MAXIMUM MATERIAL CONDITION.

	MILLIMETERS	
DIM	MIN	MAX
A	2.35	2.65
A1	0.10	0.25
b	0.35	0.49
c	0.23	0.32
D	12.65	12.95
E	7.40	7.60
e	1.27 BSC	
H	10.05	10.55
h	0.25	0.75
L	0.50	0.90
θ	0°	7°

RECOMMENDED SOLDERING FOOTPRINT*

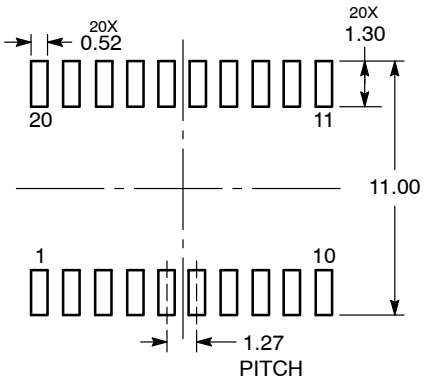

DIMENSIONS: MILLIMETERS

*For additional information on our Pb−Free strategy and soldering details, please download the ON Semiconductor Soldering and Mounting Techniques Reference Manual, SOLDERRM/D.

GENERIC MARKING DIAGRAM*

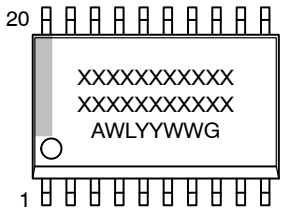

XXXXX = Specific Device Code
A = Assembly Location
WL = Wafer Lot
YY = Year
WW = Work Week
G = Pb−Free Package

*This information is generic. Please refer to device data sheet for actual part marking. Pb−Free indicator, “G” or microdot “▪”, may or may not be present. Some products may not follow the Generic Marking.

DOCUMENT NUMBER:	**98ASB42343B**	Electronic versions are uncontrolled except when accessed directly from the Document Repository. Printed versions are uncontrolled except when stamped “CONTROLLED COPY” in red.
DESCRIPTION:	**SOIC−20 WB**	**PAGE 1 OF 1**

onsemi and ONSEMI. are trademarks of Semiconductor Components Industries, LLC dba **onsemi** or its subsidiaries in the United States and/or other countries. **onsemi** reserves the right to make changes without further notice to any products herein. **onsemi** makes no warranty, representation or guarantee regarding the suitability of its products for any particular purpose, nor does **onsemi** assume any liability arising out of the application or use of any product or circuit, and specifically disclaims any and all liability, including without limitation special, consequential or incidental damages. **onsemi** does not convey any license under its patent rights nor the rights of others.

© Semiconductor Components Industries, LLC, 2019

onsemi, , and other names, marks, and brands are registered and/or common law trademarks of Semiconductor Components Industries, LLC dba "**onsemi**" or its affiliates and/or subsidiaries in the United States and/or other countries. **onsemi** owns the rights to a number of patents, trademarks, copyrights, trade secrets, and other intellectual property. A listing of **onsemi**'s product/patent coverage may be accessed at www.onsemi.com/site/pdf/Patent−Marking.pdf. **onsemi** reserves the right to make changes at any time to any products or information herein, without notice. The information herein is provided "as−is" and **onsemi** makes no warranty, representation or guarantee regarding the accuracy of the information, product features, availability, functionality, or suitability of its products for any particular purpose, nor does **onsemi** assume any liability arising out of the application or use of any product or circuit, and specifically disclaims any and all liability, including without limitation special, consequential or incidental damages. Buyer is responsible for its products and applications using **onsemi** products, including compliance with all laws, regulations and safety requirements or standards, regardless of any support or applications information provided by **onsemi**. "Typical" parameters which may be provided in **onsemi** data sheets and/or specifications can and do vary in different applications and actual performance may vary over time. All operating parameters, including "Typicals" must be validated for each customer application by customer's technical experts. **onsemi** does not convey any license under any of its intellectual property rights nor the rights of others. **onsemi** products are not designed, intended, or authorized for use as a critical component in life support systems or any FDA Class 3 medical devices or medical devices with a same or similar classification in a foreign jurisdiction or any devices intended for implantation in the human body. Should Buyer purchase or use **onsemi** products for any such unintended or unauthorized application, Buyer shall indemnify and hold **onsemi** and its officers, employees, subsidiaries, affiliates, and distributors harmless against all claims, costs, damages, and expenses, and reasonable attorney fees arising out of, directly or indirectly, any claim of personal injury or death associated with such unintended or unauthorized use, even if such claim alleges that **onsemi** was negligent regarding the design or manufacture of the part. **onsemi** is an Equal Opportunity/Affirmative Action Employer. This literature is subject to all applicable copyright laws and is not for resale in any manner.

ADDITIONAL INFORMATION

TECHNICAL PUBLICATIONS:
Technical Library: www.onsemi.com/design/resources/technical−documentation
onsemi Website: www.onsemi.com

ONLINE SUPPORT: www.onsemi.com/support
For additional information, please contact your local Sales Representative at www.onsemi.com/support/sales