1.8 V/2.5 V/3.3 V Crystal Input to 1:6 LVTTL/LVCMOS Clock Fanout Buffer with OE

NB3H83905C

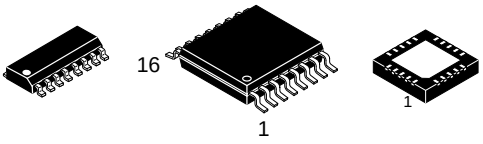

SOIC−16
D SUFFIX
CASE 751B

TSSOP−16
DT SUFFIX
CASE 948F

QFN20
MN SUFFIX
CASE 485BH

Description

The NB3H83905C is a 1.8 V, 2.5 V or 3.3 V V_{DD} core Crystal input to 1:6 LVTTL/LVCMOS fanout buffer with outputs powered by flexible 1.8 V, 2.5 V, or 3.3 V supply V_{DDO} (with $V_{DD} \geq V_{DDO}$). The device accepts a fundamental Parallel Resonant crystal from 3 MHz to 40 MHz or a single−ended LVCMOS Clock from up to 100 MHz.

Two synchronous LVTTL/LVCMOS Enable lines permit independent control over outputs BCLK[0:4] and output BCLK5; enabling or disabling only when the output is in LOW state eliminating potential output glitching or runt pulse generation. When unused, leave floating open, pins will default to HIGH state.

The 6 outputs drive 50 Ω series or parallel terminated transmission lines. Parallel termination should be to 1/2 V_{CC}. Series terminated lines can drive 2 loads each, or 12 lines total.

Fit, Form, and Function compatible with ICS83905 and PI6C10806.

Features

- Six Copies of LVTTL/LVCMOS Output Clock
- Supply Operation $V_{DD} \geq V_{DDO}$:
  - 1.8 V ± 0.2 V, 2.5 V ± 5% or 3.3 V ± 5% Core V_{DD}
  - 1.8 V ± 0.2 V, 2.5 V ± 5%, or 3.3 V ± 5% Output V_{DDO}
- Crystal Oscillator Interface
- Crystal Input Frequency Range: 3 MHz to 40 MHz
- Clock Input Frequency Range: Up to 100 MHz
- LVCMOS compatible Enable Inputs
- 5 V Tolerant Enable Inputs
- Low Output to Output Skew: 80 ps Max
- Synchronous Output Enable
- Phase Noise Floor −160 dBc (1 MHz)
- Industrial Temperature Range
- These are Pb−Free Devices

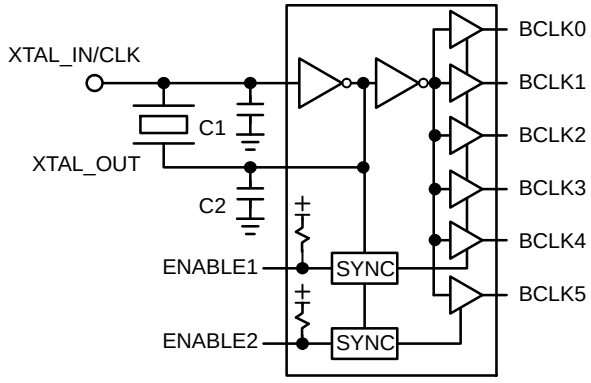

Figure 1. Simplified Block Diagram

MARKING DIAGRAMS*

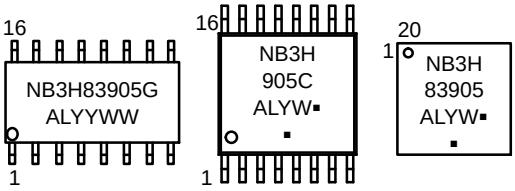

A	= Assembly Location
L	= Wafer Lot
YY, Y	= Year
WW, W	= Work Week
G or ▪	= Pb−Free Package

(Note: Microdot may be in either location)

*For additional marking information, refer to Application Note AND8002/D.

ORDERING INFORMATION

Device	Package	Shipping†
NB3H83905CDR2G	SOIC−16 (Pb−Free)	2500 / Tape & Reel
NB3H83905CDTG	TSSOP−16 (Pb−Free)	96 Units/ Tube
NB3H83905CDTR2G	TSSOP−16 (Pb−Free)	2500 / Tape & Reel
NB3H83905CMNG	QFN−20 (Pb−Free)	92 Units/ Tube

†For information on tape and reel specifications, including part orientation and tape sizes, please refer to our Tape and Reel Packaging Specifications Brochure, BRD8011/D.

© Semiconductor Components Industries, LLC, 2012

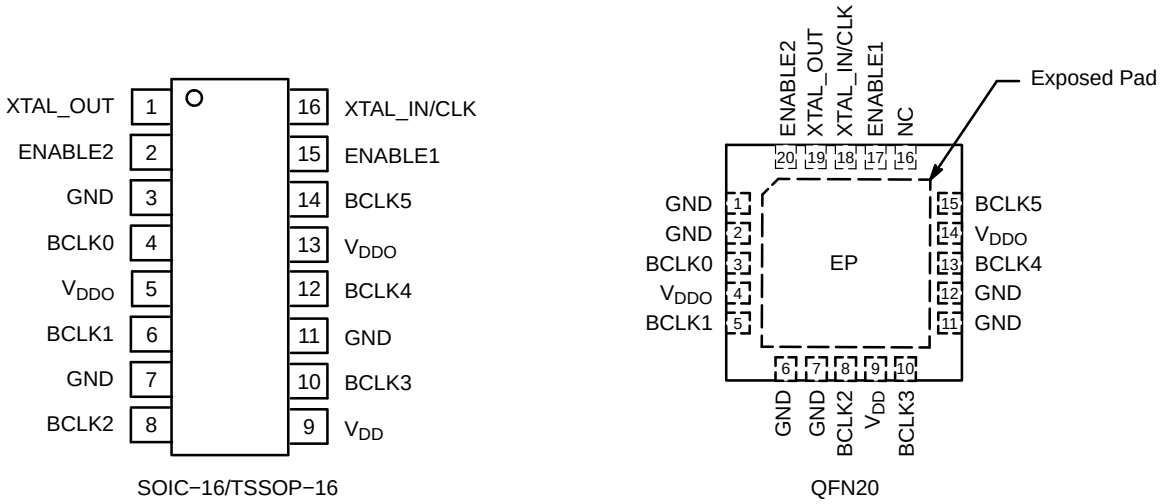

Figure 2. Pinout Configuration (Top View)

Table 1. PIN DESCRIPTION

SOIC−16 / TSSOP−16	QFN−20	Name	I/O	Description
1	19	XTAL_OUT	Crystal Interface	Oscillator Output to drive Crystal
2	20	ENABLE 2	LVTTL / LVCMOS Input	Synchronous Enable Input for BCLK5 Output. Switches only when HIGH. Open default condition HIGH due to an internal pullup resistor to V_{CC}.
3, 7, 11	1, 2, 6, 7, 11, 12	GND	GND	GND Supply pins. All GND, V_{DD} and V_{DDO} pins must be externally connected to power supply to guarantee proper operation.
4, 6, 8, 10, 12, 14	3, 5, 8, 10, 13, 15	BCLK0, 1, 2, 3, 4, 5	LVCMOS Outputs	Buffered Clock Outputs
5, 13	4, 14	V_{DDO}	POWER	Positive Supply voltage for outputs. All GND, V_{DD} and V_{DDO} pins must be externally connected to power supply to guarantee proper operation. Bypass with 0.01 μF cap to GND.
9	9	V_{DD}	POWER	Positive Supply voltage for core. All GND, V_{DD} and V_{DDO} pins must be externally connected to power supply to guarantee proper operation. Bypass with 0.01 μF cap to GND.
−	16	NC		No Connect
15	17	ENABLE 1	LVTTL / LVCMOS Input	Synchronous Enable Input for BCLK0/1/2/3/4 Output block. Switches only when HIGH. Open default condition HIGH due to an internal pullup resistor to V_{CC}
16	18	XTAL_IN/ CLK	Crystal Interface	Oscillator Input from Crystal. Single ended Clock Input.
−	EP		−	The Exposed Pad (EP) on the QFN−20 package bottom is thermally connected to the die for improved heat transfer out of package. The exposed pad must be attached to a heat−sinking conduit. The pad is not electrically connected to the die, but is recommended to be electrically and thermally connected to GND on the PC board.

Table 2. CLOCK ENABLE FUNCTION TABLE

Control Inputs		Outputs	
ENABLE1*	**ENABLE2***	**BCLK0:BCLK4**	**BCLK5**
0	0	LOW	LOW
0	1	LOW	Toggling
1	0	Toggling	LOW
1	1	Toggling	Toggling

*Defaults HIGH when floating open.

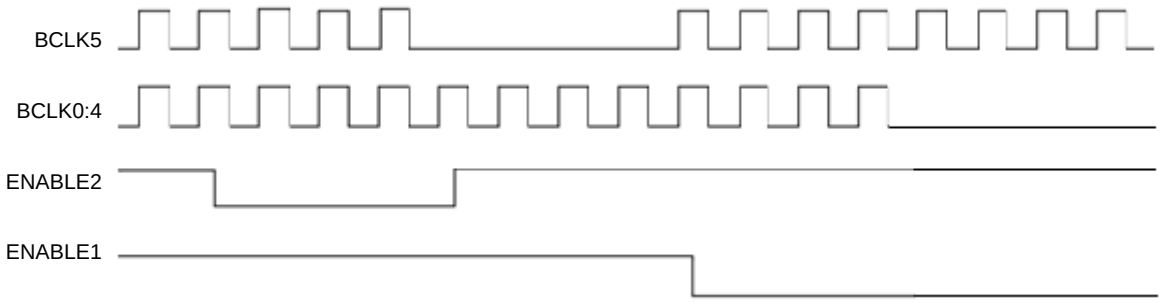

Figure 3. ENABLEx Control Timing Diagram

The ENABLEx control inputs will synchronously enable or disable the selected output(s). This control detects the falling edge of the internal signal and asserts or de−asserts the output after 3 clock cycles. When ENABLEx is LOW, the outputs are disabled to a LOW state. When ENABLEx is HIGH, the outputs are enabled to toggle.

Table 3. RECOMMENDED CRYSTAL PARAMETERS

Crystal	Fundamental AT−Cut
Frequency	10 to 40 MHz
Load Capacitance*	16−20 pF
Shunt Capacitance, C0	7 pF Max
Equivalent Series Resistance	50 Ω Max
Drive Level	1 mW

*See APPLICATION INFORMATION; Crystal Input Interface for CL loading

Table 4. ATTRIBUTES (Note 1)

Characteristics	Value
ESD Protection Human Body Model Machine Model	 > 2 kV > 200 V
Moisture Sensitivity, Indefinite Time Out of Drypack (Note 1)	Level 1
Flammability Rating Oxygen Index	UL−94 code V−0 A 1/8” 28 to 34
Transistor Count	213 Devices
Meets or exceeds JEDEC Spec EIA/JESD78 IC Latchup Test	

1. For additional information, see Application Note AND8003/D.

Table 5. MAXIMUM RATINGS (Note 2)

Symbol	Parameter	Condition 1	Condition 1	Rating	Unit
V_{DDx}	Positive Power Supply	GND = 0 V		4.6	V
V_I	Input Voltage			$-0.5 \le V_I \le V_{DD} + 0.5$	V
T_A	Operating Temperature Range, Industrial			−40 to ≤ +85	°C
T_{stg}	Storage Temperature Range			−65 to +150	°C
θ_{JA}	Thermal Resistance (Junction−to−Ambient)	0 lfpm 500 lfpm	SOIC−16 SOIC−16	80 55	°C/W
θ_{JC}	Thermal Resistance (Junction−to−Case)	(Note 3)	SOIC−16	33−36	°C/W
θ_{JA}	Thermal Resistance (Junction−to−Ambient)	0 lfpm 500 lfpm	TSSOP−16 TSSOP−16	138 108	°C/W
θ_{JC}	Thermal Resistance (Junction−to−Case)	(Note 3)	TSSOP−16	33−36	°C/W
θ_{JA}	Thermal Resistance (Junction−to−Ambient)	0 lfpm 500 lfpm	QFN−20 QFN−20	47 33	°C/W
θ_{JC}	Thermal Resistance (Junction−to−Case)	(Note 3)	QFN−20	18	°C/W
T_{sol}	Wave Solder	3 sec @ 248°C		265	°C

Stresses exceeding those listed in the Maximum Ratings table may damage the device. If any of these limits are exceeded, device functionality should not be assumed, damage may occur and reliability may be affected.

2. Maximum ratings applied to the device are individual stress limit values (not normal operating conditions) and not valid simultaneously. If stress limits are exceeded device functional operation is not implied, damage may occur and reliability may be affected.
3. JEDEC standard multilayer board − 2S2P (2 signal, 2 power).

Table 6. DC CHARACTERISTICS

Symbol	Characteristic	Min	Typ	Max	Unit
V_{DD} = V_{DDO} = 3.135 V to 3.465 V (3.3 V ±5%); GND = 0 V, T_A = −40°C to +85°C					
IDD	Core Quiescent Power Supply Current (ENABLEx = LOW)	−	−	10	mA
IDDO	Output Quiescent Power Supply Current (ENABLEx = LOW)	−	−	5	mA
V_{IH}	Input HIGH Voltage ENABLEx, XTAL_IN/CLK	2	−	V_{DD} + 0.3 V	V
V_{IL}	Input LOW Voltage ENABLEx, XTAL_IN/CLK	−0.3	−	0.8	V
V_{OH}	Output HIGH Voltage (Note 4)	2.6	−	−	V
V_{OL}	Output LOW Voltage (Note 4)	−	−	0.5	V
C_{IN}	Input Capacitance	−	4	−	pF
C_{PD}	Power Dissipation Capacitance (per Output) (Note 4)	−	19	−	pF
R_{OUT}	Output Impedance (Note 4)	−	7	−	Ω
V_{DD} = V_{DDO} = 2.375 V to 2.625 V (2.5 V ±5%); GND = 0 V, T_A = −40°C to +85°C					
IDD	Core Quiescent Power Supply Current (ENABLEx = LOW)	−	−	8	mA
IDDO	Output Quiescent Power Supply Current (ENABLEx = LOW)	−	−	4	mA
V_{IH}	Input HIGH Voltage ENABLEx, XTAL_IN/CLK	1.7	−	V_{DD} + 0.3 V	V
V_{IL}	Input LOW Voltage ENABLEx, XTAL_IN/CLK	−0.3		0.7	V
V_{OH}	Output HIGH Voltage (I_{OH} = −1 mA) Output HIGH Voltage (Note 4)	2.0 1.8	− −	− −	V
V_{OL}	Output LOW Voltage (I_{OL} = 1 mA) Output LOW Voltage (Note 4)	− −	− −	0.4 0.45	V
C_{IN}	Input Capacitance	−	4	−	pF
C_{PD}	Power Dissipation Capacitance (per Output) (Note 4)	−	18	−	pF
R_{OUT}	Output Impedance (Note 4)	−	7	−	Ω
V_{DD} = V_{DDO} = 1.6 V to 2.0 V (1.8 V ±0.2 V); GND = 0 V, T_A = −40°C to +85°C					
IDD	Core Quiescent Power Supply Current (ENABLEx = LOW)	−	−	5	mA
IDDO	Output Quiescent Power Supply Current (ENABLEx = LOW)	−	−	3	mA
V_{IH}	Input HIGH Voltage ENABLEx, XTAL_IN/CLK	0.65 * V_{DD}	−	V_{DD} + 0.3 V	V
V_{IL}	Input LOW Voltage ENABLEx, XTAL_IN/CLK	−0.3	−	0.35 * V_{DD}	V
V_{OH}	Output HIGH Voltage (Note 4)	V_{DDO} − 0.3	−	−	V
V_{OL}	Output LOW Voltage (Note 4)	−	−	0.35	V
C_{IN}	Input Capacitance	−	4	−	pF
C_{PD}	Power Dissipation Capacitance (per Output) (Note 4)	−	16	−	pF
R_{OUT}	Output Impedance (Note 4)	−	10	−	Ω

NOTE: Device will meet the specifications after thermal equilibrium has been established when mounted in a test socket or printed circuit board with maintained transverse airflow greater than 500 lfpm.

4. Parallel terminated 50 Ω to V_{DDO}/2 (see Figure 5).

Table 6. DC CHARACTERISTICS (continued)

Symbol	Characteristic	Min	Typ	Max	Unit
V_{DD} = 3.135 V to 3.465 V (3.3 V ±5%); V_{DDO} = 2.375 V to 2.625 V (2.5 V ±5%); GND = 0 V, T_A = −40°C to +85°C					
IDD	Core Quiescent Power Supply Current (ENABLEx = LOW)	−	−	10	mA
IDDO	Output Quiescent Power Supply Current (ENABLEx = LOW)	−	−	4	mA
V_{IH}	Input HIGH Voltage ENABLEx, XTAL_IN/CLK	2	−	V_{DD} + 0.3 V	V
V_{IL}	Input LOW Voltage ENABLEx, XTAL_IN/CLK	−0.3	−	0.8	V
V_{OH}	Output HIGH Voltage (I_{OH} = −1 mA) Output HIGH Voltage (Note 4)	2.0 1.8	− −	− −	V
V_{OL}	Output LOW Voltage (I_{OL} = 1 mA) Output LOW Voltage (Note 4)	− −	− −	0.4 0.45	V
C_{IN}	Input Capacitance	−	4	−	pF
C_{PD}	Power Dissipation Capacitance (per Output) (Note 4)	−	18	−	pF
R_{OUT}	Output Impedance (Note 4)	−	7	−	Ω
V_{DD} = 3.135 V to 3.465 V (3.3 V ±5%); V_{DDO} = 1.6 V to 2.0 V (1.8 V ±0.2 V.); GND = 0 V, T_A = −40°C to +85°C					
IDD	Core Quiescent Power Supply Current (ENABLEx = LOW)	−	−	10	mA
IDDO	Output Quiescent Power Supply Current (ENABLEx = LOW)	−	−	3	mA
V_{IH}	Input HIGH Voltage ENABLEx, XTAL_IN/CLK	2	−	V_{DD} + 0.3 V	V
V_{IL}	Input LOW Voltage ENABLEx, XTAL_IN/CLK	−0.3	−	0.8	V
V_{OH}	Output HIGH Voltage (Note 4)	V_{DDO} − 0.3	−	−	V
V_{OL}	Output LOW Voltage (Note 4)	−	−	0.35	V
C_{IN}	Input Capacitance	−	4	−	pF
C_{PD}	Power Dissipation Capacitance (per Output) (Note 4)	−	16	−	pF
R_{OUT}	Output Impedance (Note 4)	−	10	−	Ω
V_{DD} = 2.375 V to 2.625 V (2.5 V ±5%); V_{DDO} = 1.6 V to 2.0 V (1.8 V ±0.2 V); GND = 0 V, T_A= −40°C to +85°C					
IDD	Core Quiescent Power Supply Current (ENABLEx = LOW)	−	−	8	mA
IDDO	Output Quiescent Power Supply Current (ENABLEx = LOW)	−	−	3	mA
V_{IH}	Input HIGH Voltage ENABLEx, XTAL_IN/CLK	1.7	−	V_{DD} + 0.3 V	V
V_{IL}	Input LOW Voltage ENABLEx, XTAL_IN/CLK	−0.3	−	0.7	V
V_{OH}	Output HIGH Voltage (Note 4)	V_{DDO} − 0.3	−	−	V
V_{OL}	Output LOW Voltage (Note 4)	−	−	0.35	V
C_{IN}	Input Capacitance	−	4	−	pF
C_{PD}	Power Dissipation Capacitance (per Output) (Note 4)	−	16	−	pF
R_{OUT}	Output Impedance (Note 4)	−	10	−	Ω

NOTE: Device will meet the specifications after thermal equilibrium has been established when mounted in a test socket or printed circuit board with maintained transverse airflow greater than 500 lfpm.

4. Parallel terminated 50 Ω to V_{DDO}/2 (see Figure 5).

Table 7. AC CHARACTERISTICS

Symbol	Characteristic	Min	Typ	Max	Unit
V_{DD} = V_{DDO} = 3.135 V to 3.465 V (3.3 V ±5%); GND = 0 V, T_A = −40°C to +85°C (Note 5)					
F_{max}	Input Frequency Crystal	3	−	40	MHz
	Input Frequency Clock (XTAL_IN/CLK)	DC	−	100	
t_{EN} / t_{DIS}	Delay for Output Enable / Disable Time ENABLEx to BCLKn	−	−	4	Cycles
$tSKEW_{DC}$	Duty Cycle Skew (See Figure 4)	48	−	52	%
$tSKEW_{O-O}$	Output to Output Skew Within A Device (Same Conditions)	0	50	80	ps
ΦNOISE	Phase−Noise Performance f_{out} = 25 MHz				dBc/Hz
	100 Hz off Carrier	−	−123	−	
	1 kHz off Carrier	−	−142	−	
	10 kHz off Carrier	−	−153	−	
	100 kHz off Carrier	−	−164	−	
tJIT(Φ)	RMS Phase Jitter				ps
	25 MHz carrier, Integration Range 12 kHz to 20 MHz	−	0.08	−	
	25 MHz carrier, Integration Range 100 Hz to 1 MHz	−	0.08	−	
tr/tf	Output Rise and Fall Times (20%; 80%)	200	−	800	ps
V_{DD} = V_{DDO} = 2.375 V to 2.625 V (2.5 V ±5%); GND = 0 V, T_A = −40°C to +85°C (Note 5)					
F_{max}	Input Frequency Crystal	3	−	40	MHz
	Input Frequency Clock (XTAL1)	DC	−	100	
t_{EN} / t_{DIS}	Delay for Output Enable / Disable Time ENABLEx to BCLKn	−	−	4	Cycles
$tSKEW_{DC}$	Duty Cycle Skew (See Figure 4)	47	−	53	%
$tSKEW_{O-O}$	Output to Output Skew Within A Device (Same Conditions)	0	50	80	ps
ΦNOISE	Phase−Noise Performance f_{out} = 25 MHz				dBc/Hz
	100 Hz off Carrier	−	−118	−	
	1 kHz off Carrier	−	−137	−	
	10 kHz off Carrier	−	−151	−	
	100 kHz off Carrier	−	−165	−	
tJIT(Φ)	RMS Phase Jitter				ps
	25 MHz carrier, Integration Range 12 kHz to 20 MHz	−	0.13	−	
	25 MHz carrier, Integration Range 100 Hz to 1 MHz	−	0.13	−	
tr/tf	Output Rise and Fall Times (20%; 80%)	200	−	800	ps
V_{DD} = V_{DDO} = 1.6 V to 2.0 V (1.8 V ±0.2 V); GND = 0 V, T_A = −40°C to +85°C (Note 5)					
F_{max}	Input Frequency Crystal	3	−	40	MHz
	Input Frequency Clock (XTAL1)	DC	−	100	
t_{EN} / t_{DIS}	Delay for Output Enable / Disable Time ENABLEx to BCLKn	−	−	4	Cycles
$tSKEW_{DC}$	Duty Cycle Skew (See Figure 4)	47	−	53	%
$tSKEW_{O-O}$	Output to Output Skew Within A Device (Same Conditions)	0	50	80	ps
ΦNOISE	Phase−Noise Performance f_{out} = 25 MHz				dBc/Hz
	100 Hz off Carrier	−	−129	−	
	1 kHz off Carrier	−	−145	−	
	10 kHz off Carrier	−	−147	−	
	100 kHz off Carrier	−	−157	−	
tJIT(Φ)	RMS Phase Jitter				ps
	25 MHz carrier, Integration Range 12 kHz to 20 MHz	−	0.27	−	
	25 MHz carrier, Integration Range 100 Hz to 1 MHz	−	0.27	−	
tr/tf	Output Rise and Fall Times (20%; 80%)	200	−	900	ps

NOTE: Device will meet the specifications after thermal equilibrium has been established when mounted in a test socket or printed circuit board with maintained transverse airflow greater than 500 lfpm.

5. Crystal inputs ≤ F_{max}. Outputs loaded with 50 Ω to V_{DDO}/2. CLOCK (LVCMOS levels at XTAL1 input) 50% duty cycle. See Figures 4 and 7. See APPLICATION INFORMATION; Crystal Input Interface for CL loading.

Table 7. AC CHARACTERISTICS (continued)

Symbol	Characteristic	Min	Typ	Max	Unit
V_{DD} = 3.135 V to 3.465 V (3.3 V ±5%); V_{DDO} = 2.375 V to 2.625 V (2.5 V ±5%); GND = 0 V, T_A = −40°C to +85°C (Note 5)					
F_{max}	Input Frequency Crystal	3	−	40	MHz
	Input Frequency Clock (XTAL_IN/CLK)	DC	−	100	
t_{EN} / t_{DIS}	Delay for Output Enable / Disable Time ENABLEx to BCLKn	−	−	4	Cycles
$tSKEW_{DC}$	Duty Cycle Skew (See Figure 4)	48	−	52	%
$tSKEW_{O-O}$	Output to Output Skew Within A Device (Same Conditions)	0	50	80	ps
ΦNOISE	Phase−Noise Performance f_{out} = 25 MHz				dBc/Hz
	100 Hz off Carrier	−	−129	−	
	1 kHz off Carrier	−	−145	−	
	10 kHz off Carrier	−	−147	−	
	100 kHz off Carrier	−	−157	−	
tJIT(Φ)	RMS Phase Jitter				ps
	25 MHz carrier, Integration Range 12 kHz to 20 MHz	−	0.14	−	
	25 MHz carrier, Integration Range 100 Hz to 1 MHz	−	0.14	−	
tr/tf	Output Rise and Fall Times (20%; 80%)	200	−	800	ps
V_{DD} = 3.135 V to 3.465 V (3.3 V ±5%); V_{DDO} = 1.6 V to 2.0 V (1.8 V ±0.2 V); GND = 0 V, T_A = −40°C to +85°C (Note 5)					
F_{max}	Input Frequency Crystal	3	−	40	MHz
	Input Frequency Clock (XTAL1)	DC	−	100	
t_{EN} / t_{DIS}	Delay for Output Enable / Disable Time ENABLEx to BCLKn	−	−	4	Cycles
$tSKEW_{DC}$	Duty Cycle Skew (See Figure 4)	48	−	52	%
$tSKEW_{O-O}$	Output to Output Skew Within A Device (Same Conditions)	0	50	80	ps
ΦNOISE	Phase−Noise Performance f_{out} = 25 MHz				dBc/Hz
	100 Hz off Carrier	−	−129	−	
	1 kHz off Carrier	−	−145	−	
	10 kHz off Carrier	−	−147	−	
	100 kHz off Carrier	−	−157	−	
tJIT(Φ)	RMS Phase Jitter				ps
	25 MHz carrier, Integration Range 12 kHz to 20 MHz	−	0.18	−	
	25 MHz carrier, Integration Range 100 Hz to 1 MHz	−	0.18	−	
tr/tf	Output Rise and Fall Times (20%; 80%)	200	−	900	ps
V_{DD} = 2.375 V to 2.625 V (2.5 V ±5%); V_{DDO} = 1.6 V to 2.0 V (1.8 V ±0.2 V); GND = 0 V, T_A = −40°C to +85°C (Note 5)					
F_{max}	Input Frequency Crystal	3	−	40	MHz
	Input Frequency Clock (XTAL1)	DC	−	100	
t_{EN} / t_{DIS}	Delay for Output Enable / Disable Time ENABLEx to BCLKn	−	−	4	Cycles
$tSKEW_{DC}$	Duty Cycle Skew (See Figure 4)	47	−	53	%
$tSKEW_{O-O}$	Output to Output Skew Within A Device (Same Conditions)	0	50	80	ps
ΦNOISE	Phase−Noise Performance f_{out} = 25 MHz/				dBc/Hz
	100 Hz off Carrier	−	−129	−	
	1 kHz off Carrier	−	−145	−	
	10 kHz off Carrier	−	−147	−	
	100 kHz off Carrier	−	−157	−	
tJIT(Φ)	RMS Phase Jitter				ps
	25 MHz carrier, Integration Range 12 kHz to 20 MHz	−	0.19	−	
	25 MHz carrier, Integration Range 100 Hz to 1 MHz	−	0.19	−	
tr/tf	Output Rise and Fall Times (20%; 80%)	200	−	900	ps

NOTE: Device will meet the specifications after thermal equilibrium has been established when mounted in a test socket or printed circuit board with maintained transverse airflow greater than 500 lfpm.

5. Crystal inputs ≤ F_{max}. Outputs loaded with 50 Ω to V_{DDO}/2. CLOCK (LVCMOS levels at XTAL1 input) 50% duty cycle. See Figures 4 and 7. See APPLICATION INFORMATION; Crystal Input Interface for CL loading.

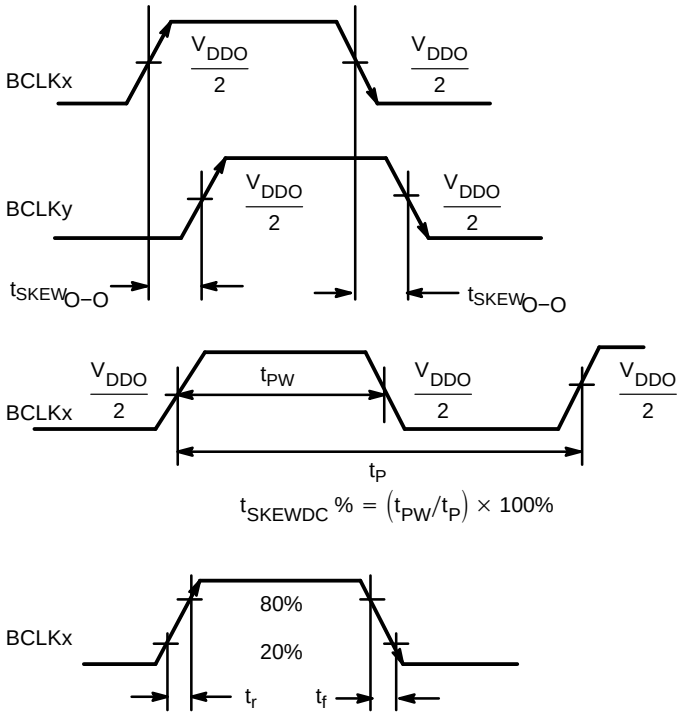

Figure 4. AC Reference Measurement

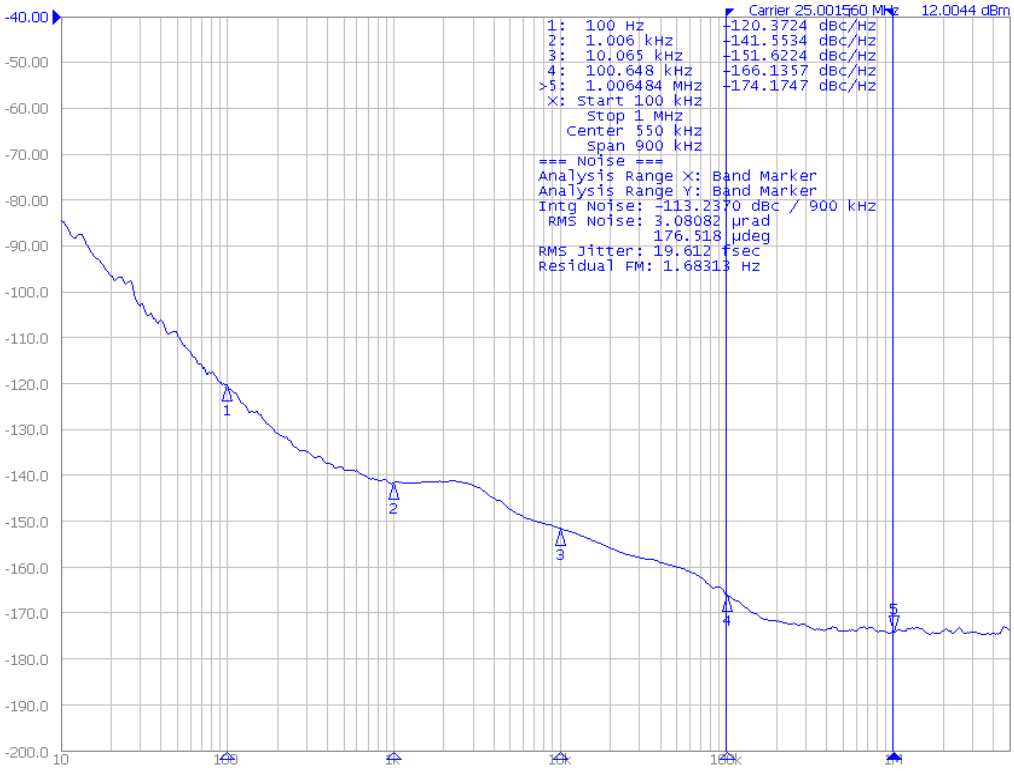

Figure 5. Typical Phase Noise Plot of the NB3H83905C Operating at 25 MHz V_{DD} = V_{DDO}= 3.3 V

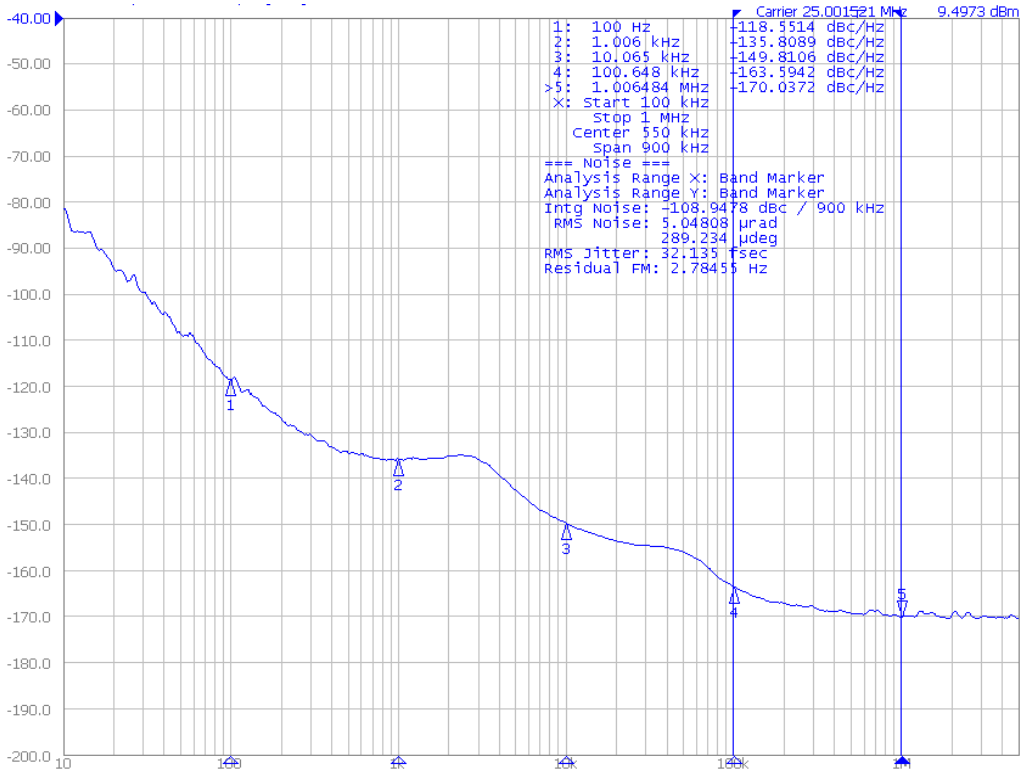

Figure 6. Typical Phase Noise Plot of the NB3H83905C Operating at 25 MHz V_{DD} = V_{DDO} = 2.5 V

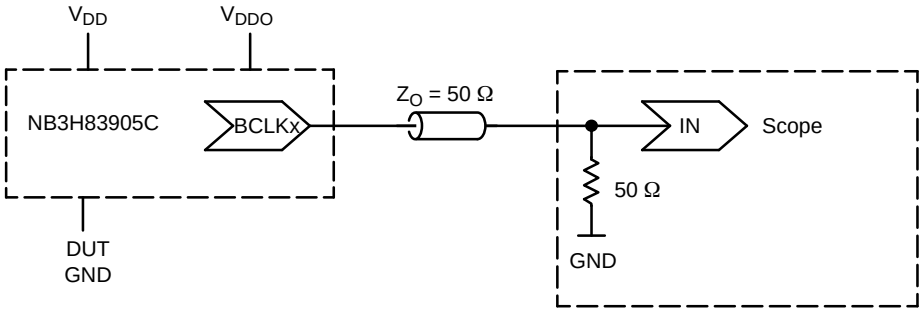

Figure 7. Typical Device Evaluation and Termination Setup − See Table 8

Table 8. TEST SUPPLY SETUP. V_{DDO} SUPPLY MAY BE CENTERED ON 0.0 V (SCOPE GND) TO PERMIT DIRECT CONNECTION INTO "50 Ω TO GND" SCOPE MODULE. V_{DD} SUPPLY TRACKS DUT GND PIN

Spec Condition:	Test Setup V_{DD}:	Test Setup V_{DDO}:	Test Setup DUT GND:
V_{DD} = V_{DDO} = 3.135 V to 3.465 V (3.3 V ±5%)	1.56 to 1.73 V	1.56 to 1.73 V	−1.56 to −1.73 V
V_{DD} = V_{DDO} = 2.375 V to 2.625 V (2.5 V ±5%)	1.1875 to 1.3125 V	1.1875 to 1.3125 V	−1.1875 to −1.3125 V
V_{DD} = V_{DDO} = 1.6 V to 2.0 V (1.8 V ±0.2 V)	0.8 to 1.0 V	0.8 to 1.0 V	−0.8 to −1.0 V
V_{DD} = 3.135 V to 3.465 V (3.3 V ±5%); V_{DDO} = 2.375 V to 2.625 V (2.5 V ±5%)	1.955 to 2.1525 V	1.1875 to 1.3125 V	−1.1875 to −1.3125 V
V_{DD} = 3.135 V to 3.465 V (3.3 V ±5%); V_{DDO} = 1.6 V to 2.0 V (1.8 V ±0.2 V)	2.335 to 2.465 V	0.8 to 1.0 V	−0.8 to −1.0 V
V_{DD} = 2.375 V to 2.625 V (2.5 V ±5%); V_{DDO} = 1.6 V to 2.0 V (1.8 V ±0.2 V)	1.575 to 1.625 V	0.8 to 1.0 V	−0.8 to −1.0 V

APPLICATION INFORMATION

Crystal Input Interface

Figure 8 shows the NB3H83905C device crystal oscillator interface using a typical parallel resonant crystal. A parallel crystal with loading capacitance C_L = 18 pF would use C1 = 32 pF and C2 = 32 pF as nominal values, assuming 4 pF of stray cap per line. The frequency accuracy and duty cycle skew can be fine tuned by adjusting the C1 and C2 values. For example, increasing the C1 and C2 values will reduce the operational frequency. Note R1 is optional and may be 0 Ω.

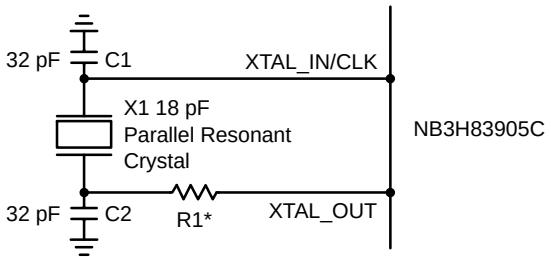

Figure 8. NB3H83905C Crystal Oscillator Interface
*** R1 is optional**

Termination

NB3H83905C device output series termination may be used by locating a 28 Ω series resistor at the driver pin as shown in Figure 9. Alternatively, a Thevenin Parallel termination may be used by locating a 100 Ω pullup resistor to V_{DD} and a 100 Ω pullup resistor to GND at the receiver pin, instead of an Rs source termination resistor, Figure 10.

Unused Input and Output Pins

All LVCMOS control pins have internal pull−ups or pull−downs; additional external resistors are not required (optionally 1 kΩ resistors may be used). All unused LVCMOS outputs can be left floating with no trace attached.

Bypass

The V_{DD} and V_{DDO} supply pins should be bypassed with both a 10 μF and a 0.1 μF cap from supply pins to GND.

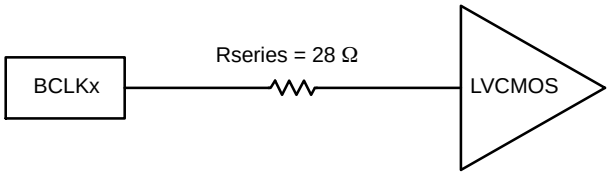

Figure 9. Series Termination

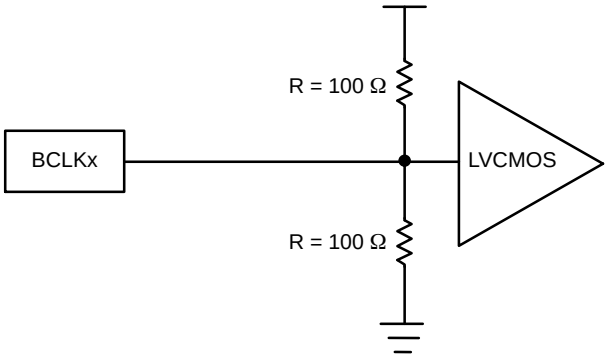

Figure 10. Optional Thevenin Termination

MECHANICAL CASE OUTLINE
PACKAGE DIMENSIONS

ON Semiconductor®

QFN20 4x4, 0.5P
CASE 485BH−01
ISSUE O

DATE 19 FEB 2010

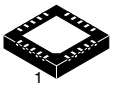

SCALE 2:1

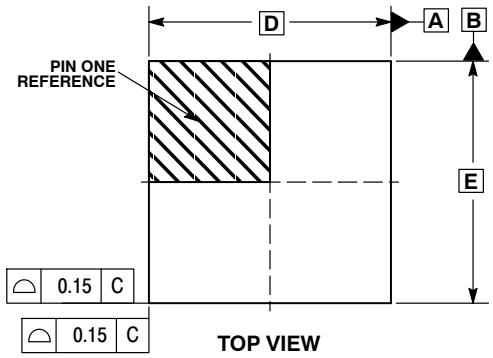

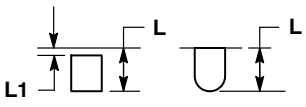

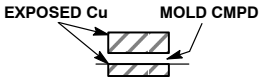

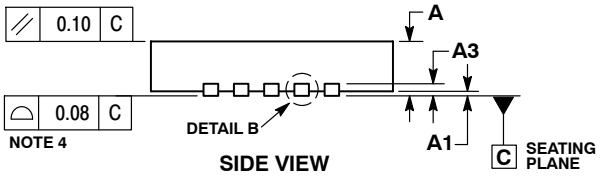

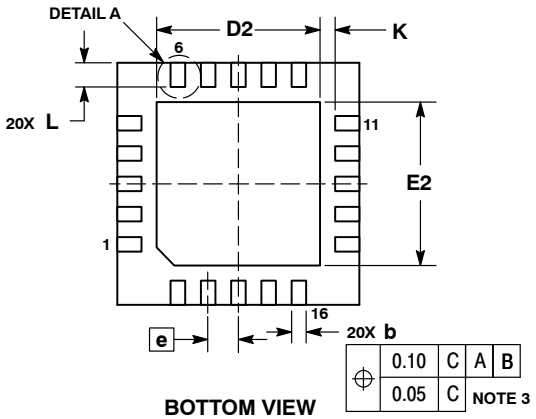

NOTES:
1. DIMENSIONING AND TOLERANCING PER ASME Y14.5M, 1994.
2. CONTROLLING DIMENSION: MILLIMETERS.
3. DIMENSION b APPLIES TO PLATED TERMINAL AND IS MEASURED BETWEEN 0.15 AND 0.30 MM FROM TERMINAL TIP.
4. COPLANARITY APPLIES TO THE EXPOSED PAD AS WELL AS THE TERMINALS.

	MILLIMETERS	
DIM	MIN	MAX
A	0.80	1.00
A1	---	0.05
A3	0.20 REF	
b	0.20	0.30
D	4.00 BSC	
D2	2.60	2.80
E	4.00 BSC	
E2	2.60	2.80
e	0.50 BSC	
K	0.20	---
L	0.35	0.45
L1	0.00	0.15

GENERIC MARKING DIAGRAM*



XXXXX = Specific Device Code
A = Assembly Location
L = Wafer Lot
Y = Year
W = Work Week
▪ = Pb−Free Package

(Note: Microdot may be in either location)

*This information is generic. Please refer to device data sheet for actual part marking. Pb−Free indicator, “G”, may or not be present.

MOUNTING FOOTPRINT

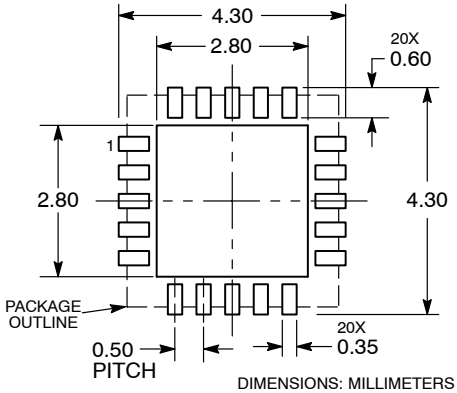

DIMENSIONS: MILLIMETERS

DOCUMENT NUMBER:	**98AON48317E**	Electronic versions are uncontrolled except when accessed directly from the Document Repository. Printed versions are uncontrolled except when stamped “CONTROLLED COPY” in red.
DESCRIPTION:	**QFN20 4X4, 0.5P**	**PAGE 1 OF 1**

ON Semiconductor and ON are trademarks of Semiconductor Components Industries, LLC dba ON Semiconductor or its subsidiaries in the United States and/or other countries. ON Semiconductor reserves the right to make changes without further notice to any products herein. ON Semiconductor makes no warranty, representation or guarantee regarding the suitability of its products for any particular purpose, nor does ON Semiconductor assume any liability arising out of the application or use of any product or circuit, and specifically disclaims any and all liability, including without limitation special, consequential or incidental damages. ON Semiconductor does not convey any license under its patent rights nor the rights of others.

© Semiconductor Components Industries, LLC, 2019

MECHANICAL CASE OUTLINE
PACKAGE DIMENSIONS

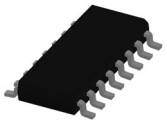

SOIC−16 9.90x3.90x1.50 1.27P
CASE 751B
ISSUE L

DATE 29 MAY 2024

NOTES:
1. DIMENSIONING AND TOLERANCING PER ASME Y14.5M, 2018.
2. DIMENSION IN MILLIMETERS. ANGLE IN DEGREES.
3. DIMENSIONS D AND E1 DO NOT INCLUDE MOLD PROTRUSION.
4. MAXIMUM MOLD PROTRUSION 0.15mm PER SIDE.
5. DIMENSION b DOES NOT INCLUDE DAMBAR PROTRUSION. ALLOWABLE DAMBAR PROTRUSION SHALL BE 0.127mm TOTAL IN EXCESS OF THE b DIMENSION AT MAXIMUM MATERIAL CONDITION.

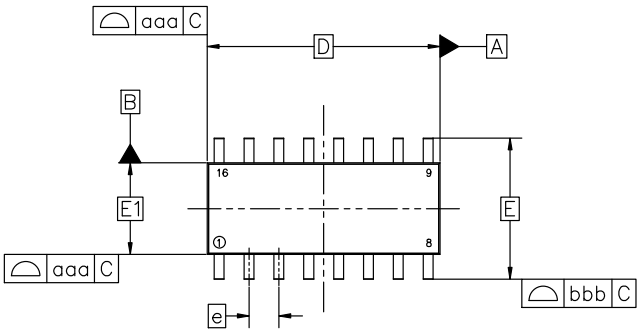

TOP VIEW

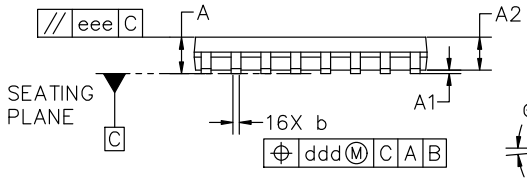

SIDE VIEW

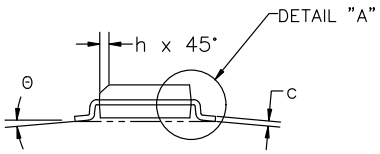

END VIEW

MILLIMETERS			
DIM	MIN	NOM	MAX
A	1.35	1.55	1.75
A1	0.00	0.05	0.10
A2	1.35	1.50	1.65
b	0.35	0.42	0.49
c	0.19	0.22	0.25
D	9.90 BSC		
E	6.00 BSC		
E1	3.90 BSC		
e	1.27 BSC		
h	0.25	−−−	0.50
L	0.40	0.83	1.25
L1	1.05 REF		
θ	0°	−−−	7°
TOLERANCE OF FORM AND POSITION			
aaa	0.10		
bbb	0.20		
ccc	0.10		
ddd	0.25		
eee	0.10		

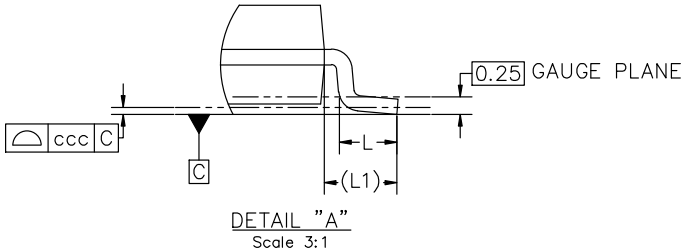

DETAIL "A"
Scale 3:1

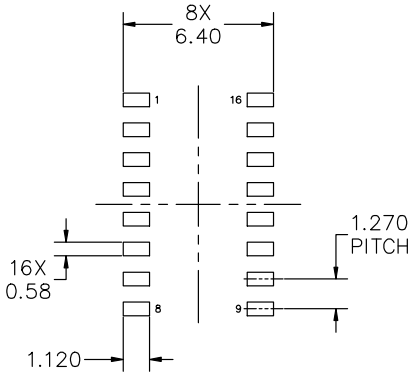

RECOMMENDED MOUNTING FOOTPRINT

*FOR ADDITIONAL INFORMATION ON OUR PB−FREE STRATEGY AND SOLDERING DETAILS, PLEASE DOWNLOAD THE onsemi SOLDERING AND MOUNTING TECHNIQUES REFERENCE MANUAL, SOLDERRM/D

DOCUMENT NUMBER:	98ASB42566B	Electronic versions are uncontrolled except when accessed directly from the Document Repository. Printed versions are uncontrolled except when stamped "CONTROLLED COPY" in red.
DESCRIPTION:	SOIC−16 9.90X3.90X1.50 1.27P	PAGE 1 OF 2

onsemi and onsemi are trademarks of Semiconductor Components Industries, LLC dba **onsemi** or its subsidiaries in the United States and/or other countries. **onsemi** reserves the right to make changes without further notice to any products herein. **onsemi** makes no warranty, representation or guarantee regarding the suitability of its products for any particular purpose, nor does **onsemi** assume any liability arising out of the application or use of any product or circuit, and specifically disclaims any and all liability, including without limitation special, consequential or incidental damages. **onsemi** does not convey any license under its patent rights nor the rights of others.

© Semiconductor Components Industries, LLC, 2019

SOIC−16 9.90x3.90x1.50 1.27P
CASE 751B
ISSUE L

DATE 29 MAY 2024

GENERIC
MARKING DIAGRAM*

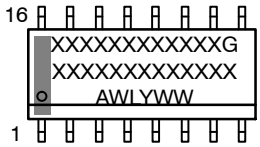

XXXXX = Specific Device Code
A = Assembly Location
WL = Wafer Lot
Y = Year
WW = Work Week
G = Pb−Free Package

*This information is generic. Please refer to device data sheet for actual part marking. Pb−Free indicator, "G" or microdot "▪", may or may not be present. Some products may not follow the Generic Marking.

STYLE 1:		STYLE 2:		STYLE 3:		STYLE 4:	
PIN 1.	COLLECTOR	PIN 1.	CATHODE	PIN 1.	COLLECTOR, DYE #1	PIN 1.	COLLECTOR, DYE #1
2.	BASE	2.	ANODE	2.	BASE, #1	2.	COLLECTOR, #1
3.	EMITTER	3.	NO CONNECTION	3.	EMITTER, #1	3.	COLLECTOR, #2
4.	NO CONNECTION	4.	CATHODE	4.	COLLECTOR, #1	4.	COLLECTOR, #2
5.	EMITTER	5.	CATHODE	5.	COLLECTOR, #2	5.	COLLECTOR, #3
6.	BASE	6.	NO CONNECTION	6.	BASE, #2	6.	COLLECTOR, #3
7.	COLLECTOR	7.	ANODE	7.	EMITTER, #2	7.	COLLECTOR, #4
8.	COLLECTOR	8.	CATHODE	8.	COLLECTOR, #2	8.	COLLECTOR, #4
9.	BASE	9.	CATHODE	9.	COLLECTOR, #3	9.	BASE, #4
10.	EMITTER	10.	ANODE	10.	BASE, #3	10.	EMITTER, #4
11.	NO CONNECTION	11.	NO CONNECTION	11.	EMITTER, #3	11.	BASE, #3
12.	EMITTER	12.	CATHODE	12.	COLLECTOR, #3	12.	EMITTER, #3
13.	BASE	13.	CATHODE	13.	COLLECTOR, #4	13.	BASE, #2
14.	COLLECTOR	14.	NO CONNECTION	14.	BASE, #4	14.	EMITTER, #2
15.	EMITTER	15.	ANODE	15.	EMITTER, #4	15.	BASE, #1
16.	COLLECTOR	16.	CATHODE	16.	COLLECTOR, #4	16.	EMITTER, #1

STYLE 5:		STYLE 6:		STYLE 7:	
PIN 1.	DRAIN, DYE #1	PIN 1.	CATHODE	PIN 1.	SOURCE N-CH
2.	DRAIN, #1	2.	CATHODE	2.	COMMON DRAIN (OUTPUT)
3.	DRAIN, #2	3.	CATHODE	3.	COMMON DRAIN (OUTPUT)
4.	DRAIN, #2	4.	CATHODE	4.	GATE P-CH
5.	DRAIN, #3	5.	CATHODE	5.	COMMON DRAIN (OUTPUT)
6.	DRAIN, #3	6.	CATHODE	6.	COMMON DRAIN (OUTPUT)
7.	DRAIN, #4	7.	CATHODE	7.	COMMON DRAIN (OUTPUT)
8.	DRAIN, #4	8.	CATHODE	8.	SOURCE P-CH
9.	GATE, #4	9.	ANODE	9.	SOURCE P-CH
10.	SOURCE, #4	10.	ANODE	10.	COMMON DRAIN (OUTPUT)
11.	GATE, #3	11.	ANODE	11.	COMMON DRAIN (OUTPUT)
12.	SOURCE, #3	12.	ANODE	12.	COMMON DRAIN (OUTPUT)
13.	GATE, #2	13.	ANODE	13.	GATE N-CH
14.	SOURCE, #2	14.	ANODE	14.	COMMON DRAIN (OUTPUT)
15.	GATE, #1	15.	ANODE	15.	COMMON DRAIN (OUTPUT)
16.	SOURCE, #1	16.	ANODE	16.	SOURCE N-CH

onsemi and onsemi are trademarks of Semiconductor Components Industries, LLC dba **onsemi** or its subsidiaries in the United States and/or other countries. **onsemi** reserves the right to make changes without further notice to any products herein. **onsemi** makes no warranty, representation or guarantee regarding the suitability of its products for any particular purpose, nor does **onsemi** assume any liability arising out of the application or use of any product or circuit, and specifically disclaims any and all liability, including without limitation special, consequential or incidental damages. **onsemi** does not convey any license under its patent rights nor the rights of others.

© Semiconductor Components Industries, LLC, 2019

MECHANICAL CASE OUTLINE
PACKAGE DIMENSIONS

TSSOP−16 WB
CASE 948F
ISSUE B

DATE 19 OCT 2006

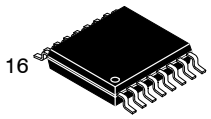

SCALE 2:1

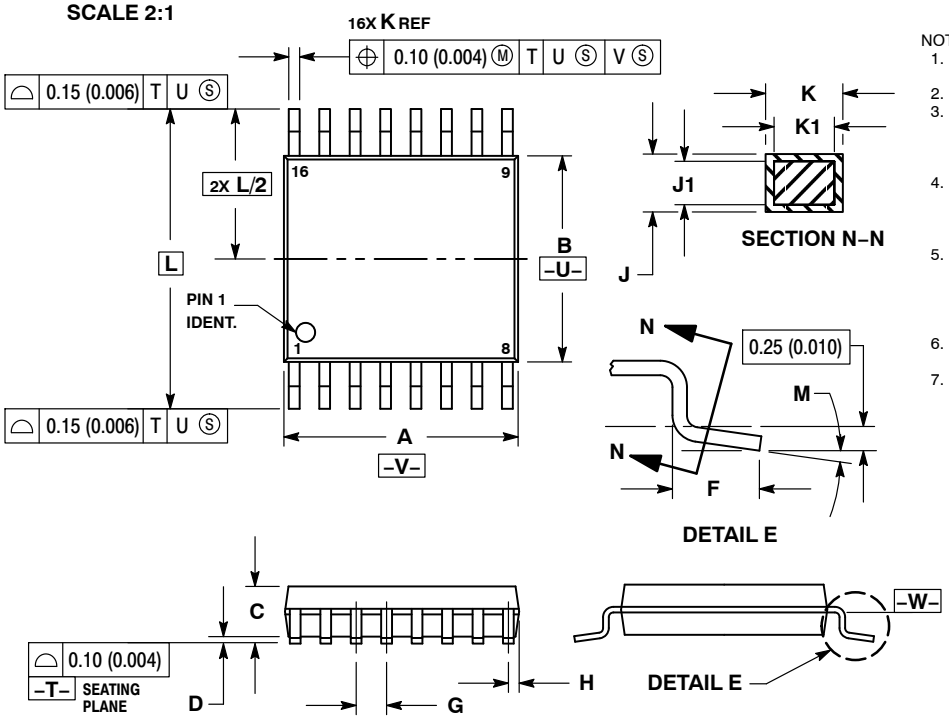

NOTES:
1. DIMENSIONING AND TOLERANCING PER ANSI Y14.5M, 1982.
2. CONTROLLING DIMENSION: MILLIMETER.
3. DIMENSION A DOES NOT INCLUDE MOLD FLASH. PROTRUSIONS OR GATE BURRS. MOLD FLASH OR GATE BURRS SHALL NOT EXCEED 0.15 (0.006) PER SIDE.
4. DIMENSION B DOES NOT INCLUDE INTERLEAD FLASH OR PROTRUSION. INTERLEAD FLASH OR PROTRUSION SHALL NOT EXCEED 0.25 (0.010) PER SIDE.
5. DIMENSION K DOES NOT INCLUDE DAMBAR PROTRUSION. ALLOWABLE DAMBAR PROTRUSION SHALL BE 0.08 (0.003) TOTAL IN EXCESS OF THE K DIMENSION AT MAXIMUM MATERIAL CONDITION.
6. TERMINAL NUMBERS ARE SHOWN FOR REFERENCE ONLY.
7. DIMENSION A AND B ARE TO BE DETERMINED AT DATUM PLANE −W−.

	MILLIMETERS		INCHES	
DIM	MIN	MAX	MIN	MAX
A	4.90	5.10	0.193	0.200
B	4.30	4.50	0.169	0.177
C	−−−	1.20	−−−	0.047
D	0.05	0.15	0.002	0.006
F	0.50	0.75	0.020	0.030
G	0.65 BSC		0.026 BSC	
H	0.18	0.28	0.007	0.011
J	0.09	0.20	0.004	0.008
J1	0.09	0.16	0.004	0.006
K	0.19	0.30	0.007	0.012
K1	0.19	0.25	0.007	0.010
L	6.40 BSC		0.252 BSC	
M	0 °	8 °	0 °	8 °

RECOMMENDED SOLDERING FOOTPRINT*

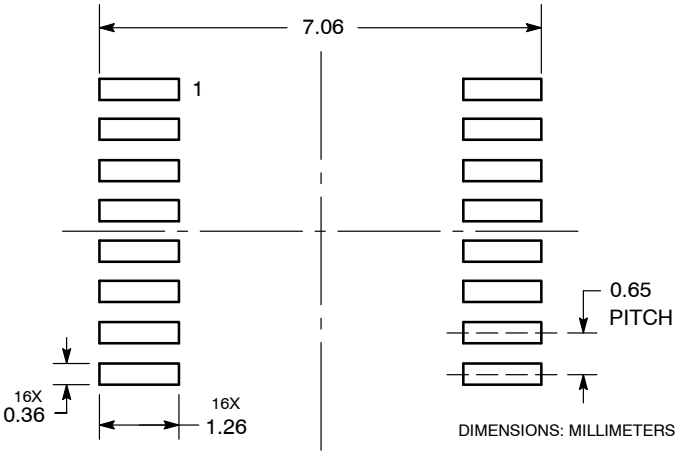

*For additional information on our Pb−Free strategy and soldering details, please download the **onsemi** Soldering and Mounting Techniques Reference Manual, SOLDERRM/D.

GENERIC MARKING DIAGRAM*

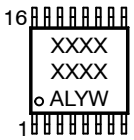

XXXX	= Specific Device Code
A	= Assembly Location
L	= Wafer Lot
Y	= Year
W	= Work Week
G or ▪	= Pb−Free Package

*This information is generic. Please refer to device data sheet for actual part marking. Pb−Free indicator, “G” or microdot “ ▪”, may or may not be present. Some products may not follow the Generic Marking.

DOCUMENT NUMBER:	**98ASH70247A**	Electronic versions are uncontrolled except when accessed directly from the Document Repository. Printed versions are uncontrolled except when stamped “CONTROLLED COPY” in red.	
DESCRIPTION:	**TSSOP−16**		**PAGE 1 OF 1**

onsemi and onsemi are trademarks of Semiconductor Components Industries, LLC dba **onsemi** or its subsidiaries in the United States and/or other countries. **onsemi** reserves the right to make changes without further notice to any products herein. **onsemi** makes no warranty, representation or guarantee regarding the suitability of its products for any particular purpose, nor does **onsemi** assume any liability arising out of the application or use of any product or circuit, and specifically disclaims any and all liability, including without limitation special, consequential or incidental damages. **onsemi** does not convey any license under its patent rights nor the rights of others.

© Semiconductor Components Industries, LLC, 2019

onsemi, , and other names, marks, and brands are registered and/or common law trademarks of Semiconductor Components Industries, LLC dba "**onsemi**" or its affiliates and/or subsidiaries in the United States and/or other countries. **onsemi** owns the rights to a number of patents, trademarks, copyrights, trade secrets, and other intellectual property. A listing of **onsemi**'s product/patent coverage may be accessed at www.onsemi.com/site/pdf/Patent−Marking.pdf. **onsemi** reserves the right to make changes at any time to any products or information herein, without notice. The information herein is provided "as−is" and **onsemi** makes no warranty, representation or guarantee regarding the accuracy of the information, product features, availability, functionality, or suitability of its products for any particular purpose, nor does **onsemi** assume any liability arising out of the application or use of any product or circuit, and specifically disclaims any and all liability, including without limitation special, consequential or incidental damages. Buyer is responsible for its products and applications using **onsemi** products, including compliance with all laws, regulations and safety requirements or standards, regardless of any support or applications information provided by **onsemi**. "Typical" parameters which may be provided in **onsemi** data sheets and/or specifications can and do vary in different applications and actual performance may vary over time. All operating parameters, including "Typicals" must be validated for each customer application by customer's technical experts. **onsemi** does not convey any license under any of its intellectual property rights nor the rights of others. **onsemi** products are not designed, intended, or authorized for use as a critical component in life support systems or any FDA Class 3 medical devices or medical devices with a same or similar classification in a foreign jurisdiction or any devices intended for implantation in the human body. Should Buyer purchase or use **onsemi** products for any such unintended or unauthorized application, Buyer shall indemnify and hold **onsemi** and its officers, employees, subsidiaries, affiliates, and distributors harmless against all claims, costs, damages, and expenses, and reasonable attorney fees arising out of, directly or indirectly, any claim of personal injury or death associated with such unintended or unauthorized use, even if such claim alleges that **onsemi** was negligent regarding the design or manufacture of the part. **onsemi** is an Equal Opportunity/Affirmative Action Employer. This literature is subject to all applicable copyright laws and is not for resale in any manner.

ADDITIONAL INFORMATION

TECHNICAL PUBLICATIONS:
Technical Library: www.onsemi.com/design/resources/technical−documentation
onsemi Website: www.onsemi.com

ONLINE SUPPORT: www.onsemi.com/support
For additional information, please contact your local Sales Representative at www.onsemi.com/support/sales