2.5 V/3.3 V, 5 Gb/s Multi Level Clock/Data Input to CML Driver/Receiver/Buffer/ Translator with Internal Termination

NB4L16M



QFN−16
MN SUFFIX
CASE 485G−01

MARKING DIAGRAM*

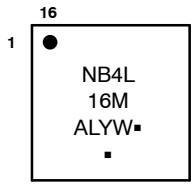

A	= Assembly Location
L	= Wafer Lot
Y	= Year
W	= Work Week
▪	= Pb-Free Package

(Note: Microdot may be in either location)

*For additional marking information, refer to Application Note AND8002/D.

ORDERING INFORMATION

Device	Package	Shipping†
NB4L16MMNG	QFN−16 (Pb-Free)	123 Units/Tube
NB4L16MMNR2G	QFN−16 (Pb-Free)	3000/Tape & Reel

†For information on tape and reel specifications, including part orientation and tape sizes, please refer to our Tape and Reel Packaging Specifications Brochure, BRD8011/D.

Description

The NB4L16M is a differential driver/receiver/buffer/translator which can accept LVPECL, LVDS, CML, HSTL, LVCMOS/LVTTL and produce 400 mV CML output. The device is capable of receiving, buffering, and translating a clock or data signal that is as small as 75 mV operating up to 3.5 GHz or 5.0 Gb/s, respectively. As such, it is ideal for SONET, GigE, Fiber Channel and backplane applications (see Table 6 and Figures 20, 21, 22, and 23).

Differential inputs incorporate internal 50 Ω termination resistors and accept LVPECL (Positive ECL), LVTTL/LVCMOS, CML, HSTL or LVDS. The differential 16 mA CML output provides matching internal 50 Ω termination, and 400 mV output swing when externally receiver terminated, 50 Ω to V_{CC} (see Figure 19). These features provide transmission line termination on chip, at the receiver and driver end, eliminating any use of additional external components.

The V_{BB}, an internally generated voltage supply, is available to this device only. For single-ended input configuration, the unused complementary differential input is connected to V_{BB} as a switching reference voltage. The V_{BB} reference output can be used also to re-bias capacitor coupled differential or single-ended output signals. For the capacitor coupled input signals, V_{BB} should be connected to the V_{TD} pin and bypassed to ground with a 0.01 μF capacitor. When not used V_{BB} should be left open.

This device is housed in a 3x3 mm 16 pin QFN package. Application notes, models, and support documentation are available at www.onsemi.com.

Features

- Maximum Input Clock Frequency up to 3.5 GHz
- Maximum Input Data Rate up to 5.0 Gb/s
- < 0.7 ps Maximum Clock RMS Jitter
- < 10 ps Maximum Data Dependent Jitter at 2.5 Gb/s
- 220 ps Typical Propagation Delay
- 60 ps Typical Rise and Fall Times
- CML Output with Operating Range:
  - V_{CC} = 2.375 V to 3.6 V with V_{EE} = 0 V
- CML Output Level (400 mV Peak-to-Peak Output), Differential Output Only
- 50 Ω Internal Input and Output Termination Resistors
- Functionally Compatible with Existing 2.5 V / 3.3 V LVEL, LVEP, EP, and SG Devices
- These Devices are Pb-Free, Halogen Free and are RoHS Compliant

© Semiconductor Components Industries, LLC, 2016

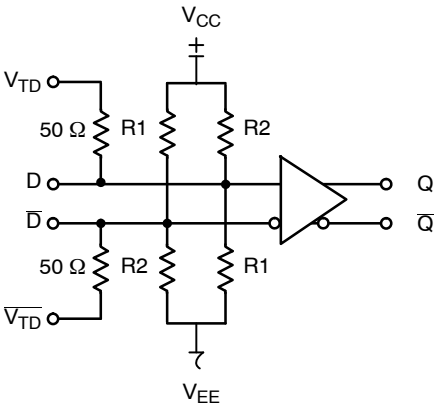

Figure 1. Functional Block Diagram

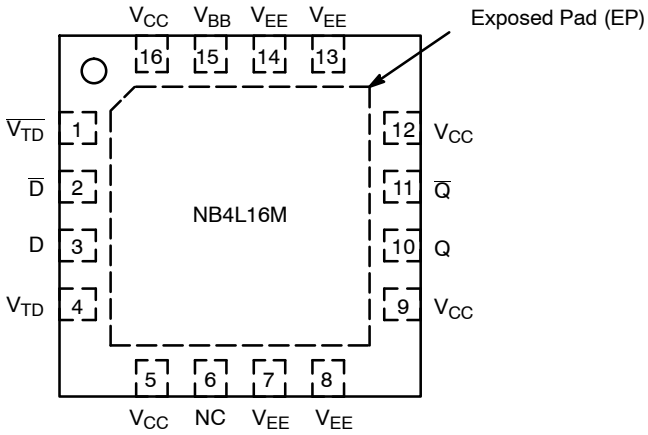

Figure 2. Pin Configuration (Top View)

Table 1. PIN DESCRIPTION

Pin	Name	I/O	Description
1	$\overline{V_{TD}}$	–	Internal 50 Ω termination pin. See Table 4 (Note 1).
2	$\overline{D}$	LVPECL, CML, HSTL, LVCMOS, LVDS, LVTTL Input	Inverted differential input. Internal 36.5 kΩ to V_{CC} and 73 kΩ to V_{EE} (Note 1).
3	D	LVPECL, CML, HSTL, LVCMOS, LVDS, LVTTL Input	Non-inverted differential input. Internal 73 kΩ to V_{CC} and 36.5 kΩ to V_{EE} (Note 1).
4	V_{TD}	–	Internal 50 Ω termination pin. See Table 4. (Note 1)
15	V_{BB}	–	Internally generated reference voltage supply.
6	NC		No Connect pin. The No Connect (NC) pin is electrically connected to the die and MUST be left open.
10	Q	CML Output	Non-inverted differential output. Typically receiver terminated with 50 Ω resistor to V_{CC}.
11	$\overline{Q}$	CML Output	Inverted differential output. Typically receiver terminated with 50 Ω resistor to V_{CC}.
7, 8, 13, 14	V_{EE}	–	Negative supply voltage
5, 9, 12, 16	V_{CC}	–	Positive supply voltage
–	EP	–	Exposed pad (EP). EP on the package bottom is thermally connected to the die for improved heat transfer out of the package. The pad is not electrically connected to the die, but is recommended to be soldered to V_{EE} on the PC Board.

1. In the differential configuration when the input termination pins (V_{TD}, $\overline{V_{TD}}$) are connected to a common termination voltage and if no signal is applied on D/$\overline{D}$ input then the device will be susceptible to self-oscillation.

Table 2. ATTRIBUTES

Characteristics	Value
Input Default State Resistors R1 R2	 37.5 kΩ 73 kΩ
ESD Protection Human Body Model Machine Model Charged Device Model	 > 2 kV > 200 V > 1 kV
Moisture Sensitivity (Note 1)	Pb-Free Pkg
QFN−16	Level 1
Flammability Rating Oxygen Index: 28 to 34	UL 94 V−0 @ 0.125 in
Transistor Count	157
Meets or exceeds JEDEC Spec EIA/JESD78 IC Latchup Test	

1. For additional information, see Application Note AND8003/D.

Table 3. MAXIMUM RATINGS

Symbol	Parameter	Condition 1	Condition 2	Rating	Unit
V_{CC}	Positive Power Supply	V_{EE} = 0 V		6	V
V_{EE}	Negative Power Supply	V_{CC} = 0 V		−6	V
V_I	Positive Input Negative Input	V_{EE} = 0 V V_{CC} = 0 V	$V_I = V_{CC}$ $V_I = V_{EE}$	6 −6	V
V_{INPP}	Differential Input Voltage	$\|D - \overline{D}\|$		$\|V_{CC} - V_{EE}\|$	V
I_{IN}	Input Current Through R_T (50 Ω Resistor)	Static Surge		45 80	mA
I_{OUT}	Output Current	Continuous Surge		25 50	mA
I_{BB}	V_{BB} Sink/Source			± 0.5	mA
T_A	Operating Temperature Range			−40 to +85	°C
T_{stg}	Storage Temperature Range			−65 to +150	°C
θ_{JA}	Thermal Resistance (Junction-to-Ambient) (Note 1)	0 lfpm 500 lfpm	QFN−16	42 35	°C/W
θ_{JC}	Thermal Resistance (Junction-to-Case)	1S2P (Note 1)	QFN−16	4	°C/W
T_{sol}	Wave Solder (Pb-Free)			265	°C

Stresses exceeding those listed in the Maximum Ratings table may damage the device. If any of these limits are exceeded, device functionality should not be assumed, damage may occur and reliability may be affected.

1. JEDEC standard multilayer board − 1S2P (1 signal, 2 power) with 8 filled thermal vias under exposed pad.

Table 4. DC CHARACTERISTICS, CLOCK INPUTS, CML OUTPUTS (V_{CC}= 2.375 V to 3.8 V, V_{EE} = 0 V, T_A = −40°C to +85°C)

Symbol	Characteristic	Min	Typ	Max	Unit
I_{CC}	Power Supply Current (Inputs and Outputs Open)	30	45	55	mA
V_{OH}	Output HIGH Voltage (Note 1)	V_{CC} − 40	V_{CC} − 10	V_{CC}	mV
V_{OL}	Output LOW Voltage (Note 1)	V_{CC} − 500	V_{CC} − 400	V_{CC} − 300	mV
DIFFERENTIAL INPUT DRIVEN SINGLE-ENDED (Figures 15 and 17)					
V_{TH}	Input Threshold Reference Voltage Range (Note 3)	1050		V_{CC} − 150	mV
V_{IH}	Single-ended Input HIGH Voltage	V_{th} + 150		V_{CC}	mV
V_{IL}	Single-ended Input LOW Voltage	V_{EE}		V_{th} − 150	mV
V_{BB}	Internally Generated Reference Voltage Supply (Loaded with −100 μA)	V_{CC} − 1500	V_{CC} − 1400	V_{CC} − 1300	mV
DIFFERENTIAL INPUTS DRIVEN DIFFERENTIALLY (Figures 16 and 18)					
V_{IHD}	Differential Input HIGH Voltage	1200		V_{CC}	mV
V_{ILD}	Differential Input LOW Voltage	V_{EE}		V_{CC} − 150	mV
V_{CMR}	Input Common Mode Range (Differential Configuration)	950		V_{CC} − 75	mV
V_{ID}	Differential Input Voltage (V_{IHD} − V_{ILD})	150		V_{CC} − V_{EE}	mV
I_{IH}	Input HIGH Current (VTD/$\overline{VTD}$ Open) D $\overline{D}$	 0 0	 100 50	 150 100	μA
I_{IL}	Input LOW Current (VTD/$\overline{VTD}$ Open) D $\overline{D}$	 −100 −150	 −50 −100	 0 0	μA
R_{TIN}	Internal Input Termination Resistor	40	50	60	Ω
R_{TOUT}	Internal Output Termination Resistor	40	50	60	Ω
$R_{Temp\ Coef}$	Internal I/O Termination Resistor Temperature Coefficient		16		mΩ/°C

NOTE: Device will meet the specifications after thermal equilibrium has been established when mounted in a test socket or printed circuit board with maintained transverse airflow greater than 500 lfpm.

1. CML outputs require 50 Ω receiver termination resistors to V_{CC} for proper operation. See Figure 14.
2. Input and output parameters vary 1:1 with V_{CC}.
3. V_{th} is applied to the complementary input when operating in single-ended mode.
4. V_{CMR} min varies 1:1 with V_{EE}, V_{CMRmax} varies 1:1 with V_{CC}. The V_{CMR} range is referenced to the most positive side of the differential input signal.

Table 5. AC CHARACTERISTICS (V_{CC} = 2.375 V to 3.8 V, V_{EE} = 0 V; (Note 1))

Symbol	Characteristic	–40°C			25°C			85°C			Unit
		Min	Typ	Max	Min	Typ	Max	Min	Typ	Max	
V_{OUTPP}	Output Voltage Amplitude (@$V_{INPPmin}$) (Figures 3 and 4) $f_{in} \le$ 3.5 Ghz $f_{in} \le$ 4.5 GHz	 280 150	 400 300		 280 150	 400 300		 280 150	 400 300		mV
f_{DATA}	Maximum Operating Data Rate	3.5	5.0		3.5	5.0		3.5	5.0		Gb/s
t_{PLH}, t_{PHL}	Propagation Delay to Output Differential @ 0.5 GHz (Figure 6)	175	215	265	175	220	265	175	225	265	ps
t_{SKEW}	Duty Cycle Skew (Note 2) Device-to-Device Skew (Note 6)		2.0 6.0	10 90		2.0 6.0	10 90		2.0 6.0	10 90	ps
t_{JITTER}	RMS Random Clock Jitter (Note 4) $f_{in} \le$ 4.5 GHz Peak-to-Peak Data Dependent Jitter (Note 5) f_{DATA} = 2.5 Gb/s f_{DATA} = 3.5 Gb/s f_{DATA} = 5.0 Gb/s		 0.2 1.5 2.0 9.0	 0.7 10 12 25		 0.2 1.5 2.0 9.0	 0.7 10 12 25		 0.2 1.5 2.0 9.0	 0.7 10 12 25	ps
V_{INPP}	Input Voltage Swing/Sensitivity (Differential Configuration) (Note 3)	75		V_{CC} –V_{EE}	75		V_{CC} –V_{EE}	75		V_{CC} –V_{EE}	mV
t_r t_f	Output Rise/Fall Times @ 0.5 GHz (Figure 5) (20% – 80%)		60	90		60	90		60	90	ps

NOTE: Device will meet the specifications after thermal equilibrium has been established when mounted in a test socket or printed circuit board with maintained transverse airflow greater than 500 lfpm.

1. Measured by forcing V_{INPP}(MIN) from a 50% duty cycle clock source. All loading with an external R_L = 50 Ω to V_{CC}. Input edge rates 40 ps (20% – 80%). See Figure 12 and 14.
2. Duty cycle skew is measured between differential outputs using the deviations of the sum of Tpw– and Tpw+ @ 0.5 GHz.
3. V_{INPP}(MAX) cannot exceed V_{CC} – V_{EE}. Input voltage swing is a single-ended measurement operating in differential mode. See Figure 11.
4. Additive RMS jitter with 50% duty cycle input clock signal.
5. Additive peak-to-peak data dependent jitter with NRZ input data signal, PRBS 2^{23}–1 and K28.7 pattern. See Figures 7, 8, 9, 10, 11 and 12.
6. Device-to-device skew is measured between outputs under identical transition @ 0.5 GHz.

TYPICAL OPERATING CHARACTERISTICS

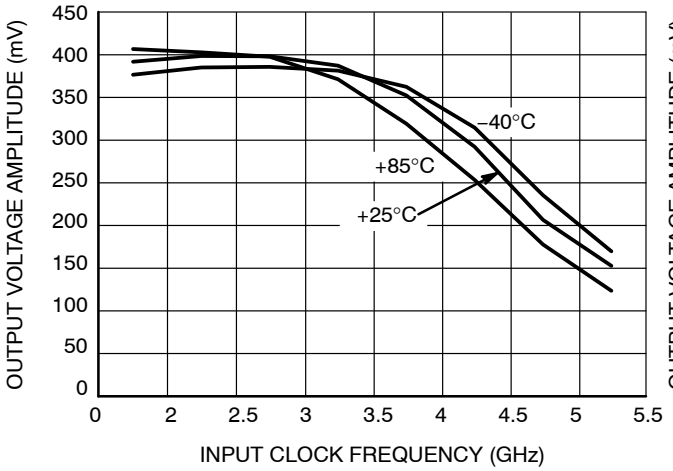

Figure 3. Output Voltage Amplitude (V_{OUTPP}) vs. Input Clock Frequency (f_{in}) and Temperature at 3.3 V Power Supply

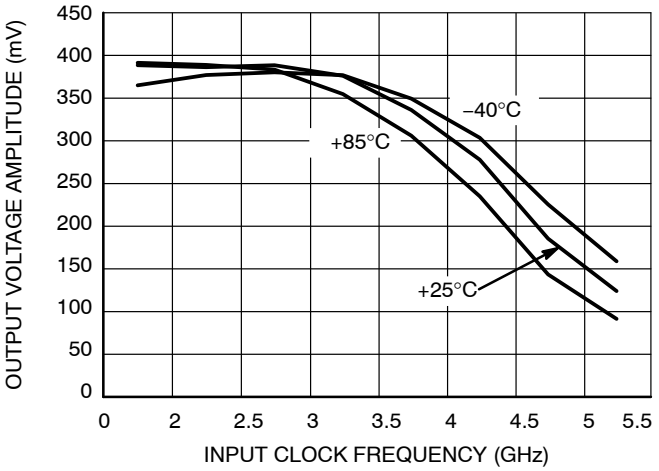

Figure 4. Output Voltage Amplitude (V_{OUTPP}) vs Input Clock Frequency (f_{in}) and Temperature at 2.5 V Power Supply

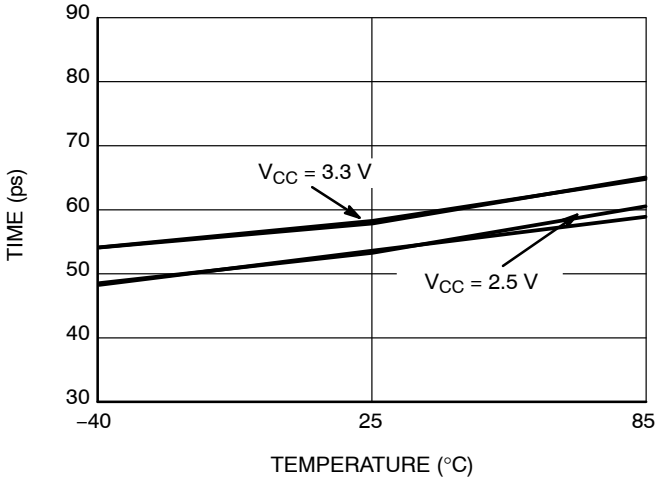

Figure 5. Rise/Fall Time vs Temperature and Power Supply

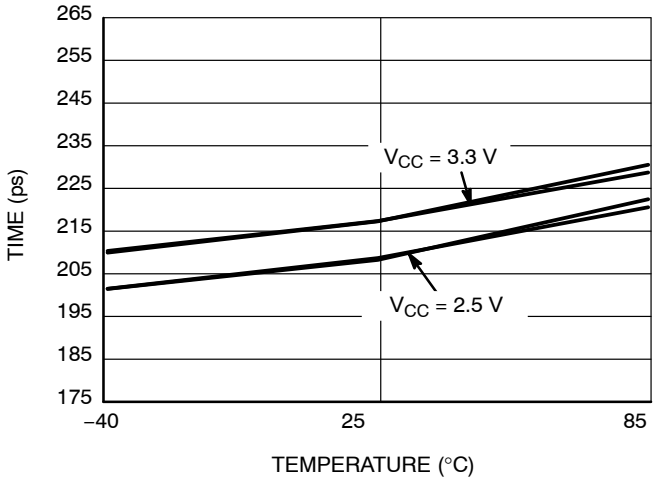

Figure 6. Propagation Delay vs Temperature and Power Supply

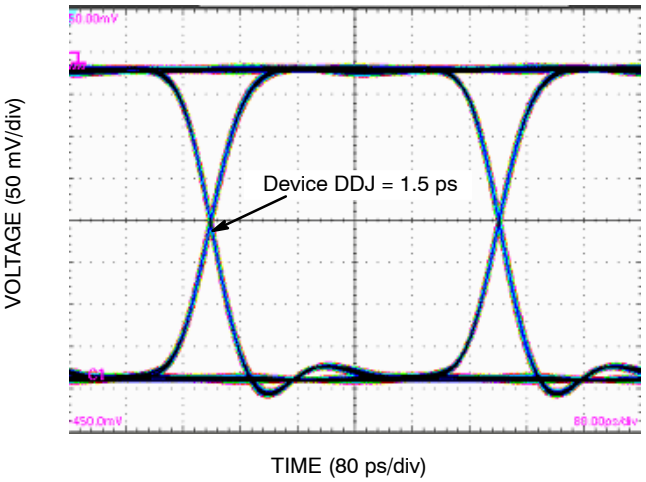

Figure 7. Typical Output Waveform at 2.488 Gb/s with PRBS $2^{23}-1$ (V_{INPP} = 75 mV; Input Signal DDJ = 12 ps)

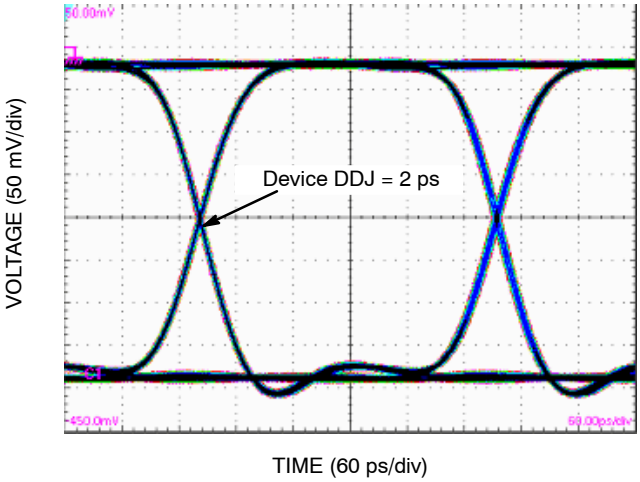

Figure 8. Typical Output Waveform at 3.2 Gb/s with PRBS 2^23−1 (V_{INPP} = 75 mV; Input Signal DDJ = 12 ps)

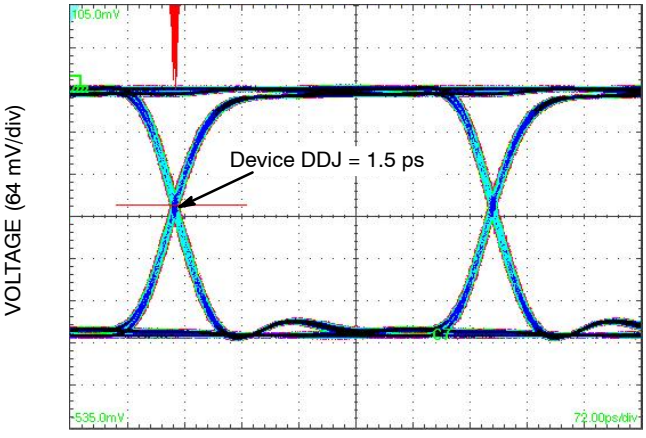

Figure 9. Typical Output Waveform at 2.488 Gb/s with PRBS $2^{23}-1$ (V_{INPP} = 400 mV; Input Signal DDJ = 12 ps)

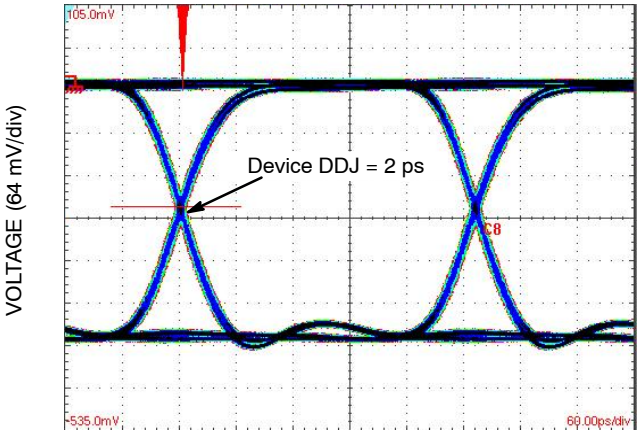

Figure 10. Typical Output Waveform at 3.2 Gb/s with PRBS $2^{23}-1$ (V_{INPP} = 400 mV; Input Signal DDJ = 12 ps)

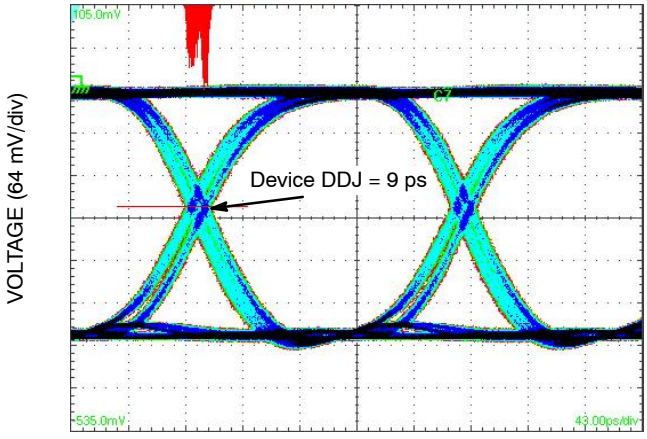

Figure 11. Typical Output Waveform at 5 Gb/s with PRBS 223−1 (VINPP = 400 mV; Input Signal DDJ = 13 ps)

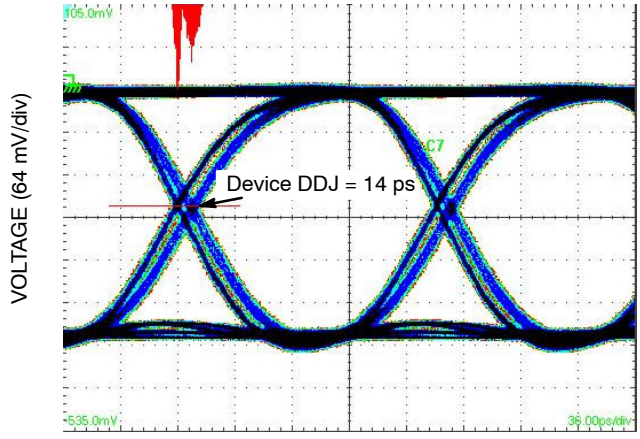

Figure 12. Typical Output Waveform at 6.125 Gb/s with PRBS 223−1 (VINPP = 400 mV; Input Signal DDJ = 15 ps)

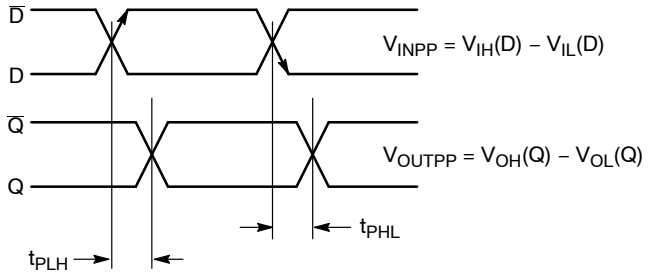

Figure 13. AC Reference Measurement

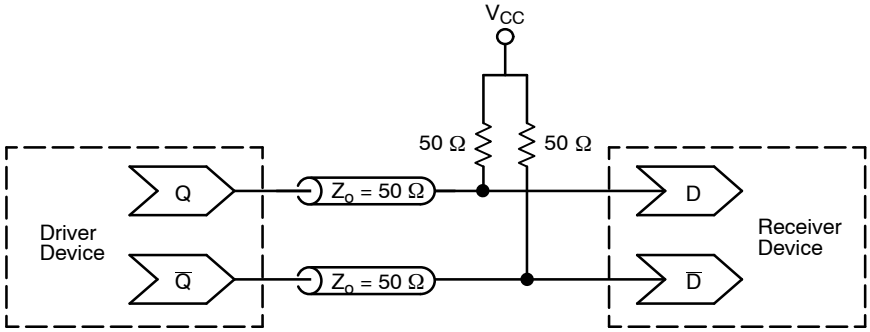

Figure 14. Typical Termination for Output Driver and Device Evaluation

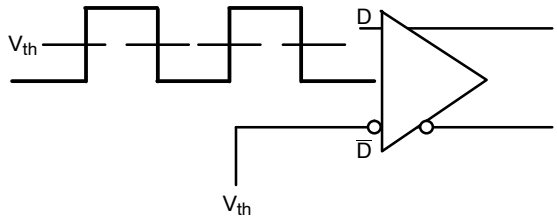

Figure 15. Differential Input Driven Single-Ended

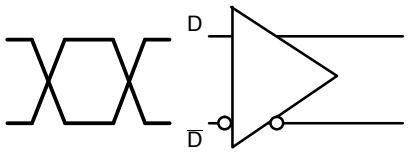

Figure 16. Differential Inputs Driven Differentially

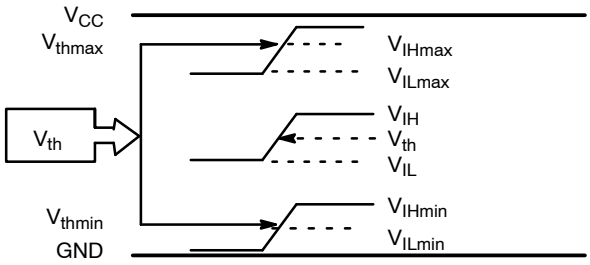

Figure 17. V_{th} Diagram

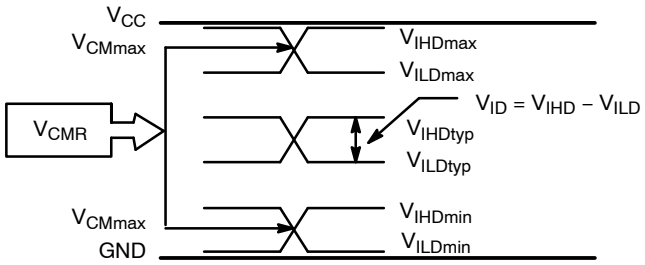

Figure 18. V_{CMR} Diagram

NOTE: $V_{EE} \perp\!\!\!\perp V_{IN} \perp\!\!\!\perp V_{CC}$; $V_{IH} > V_{IL}$

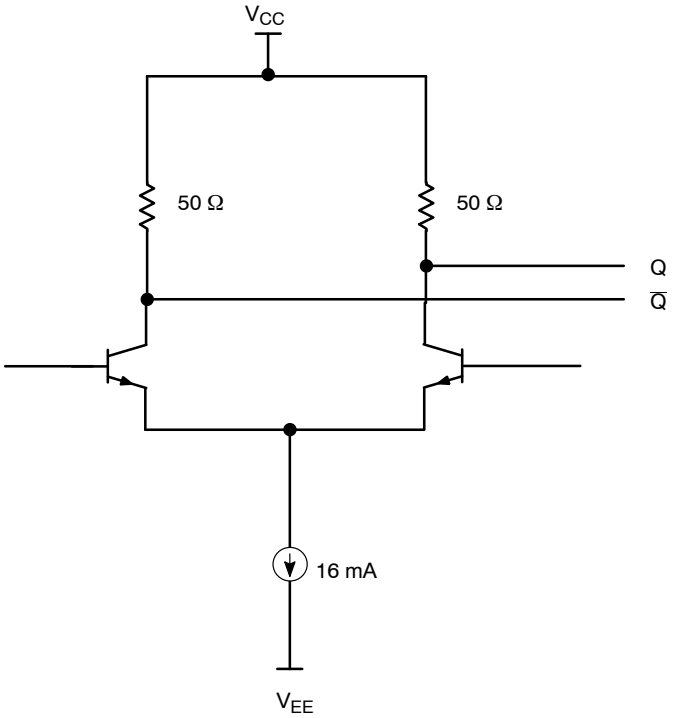

Figure 19. CML Output Structure

Table 6. INTERFACING OPTIONS

INTERFACING OPTIONS	CONNECTIONS
CML	Connect V_{TD} and $\overline{V_{TD}}$ to V_{CC}
LVDS	Connect V_{TD} and $\overline{V_{TD}}$ Together
AC-COUPLED	Bias V_{TD} and $\overline{V_{TD}}$ Inputs within Common Mode Range (V_{CMR})
RSECL, PECL, NECL	Standard ECL Termination Techniques
LVTTL, LVCMOS	An External Voltage (V_{THR}) should be applied to the unused complementary differential input. Nominal V_{THR} is 1.5 V for LVTTL and V_{CC}/2 for LVCMOS inputs. This voltage must be within the V_{THR} specification.

APPLICATION INFORMATION

All NB4L16M inputs can accept LVPECL, CML, LVTTL, LVCMOS and LVDS signal levels. The limitations for differential input signal (LVDS, PECL, or CML) are minimum input swing of 75 mV and the maximum input swing of 2500 mV. Within these conditions, the input voltage can range from V_{CC} to 1.2 V. Examples interfaces are illustrated below in a 50 Ω environment (Z = 50 Ω).

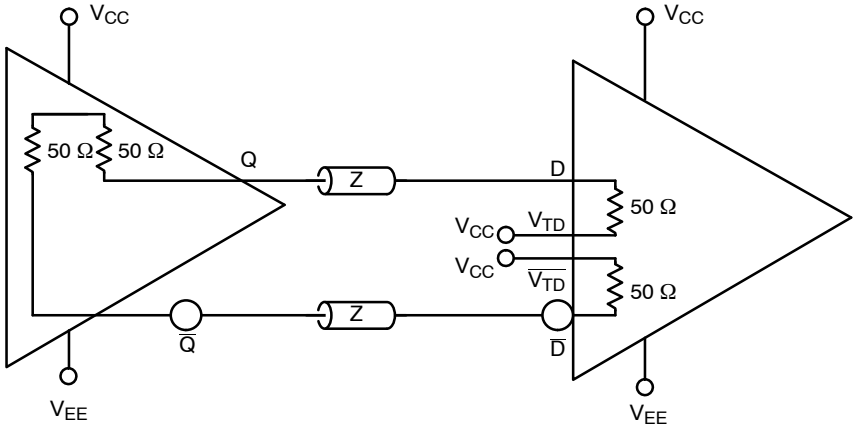

Figure 20. CML to CML Interface

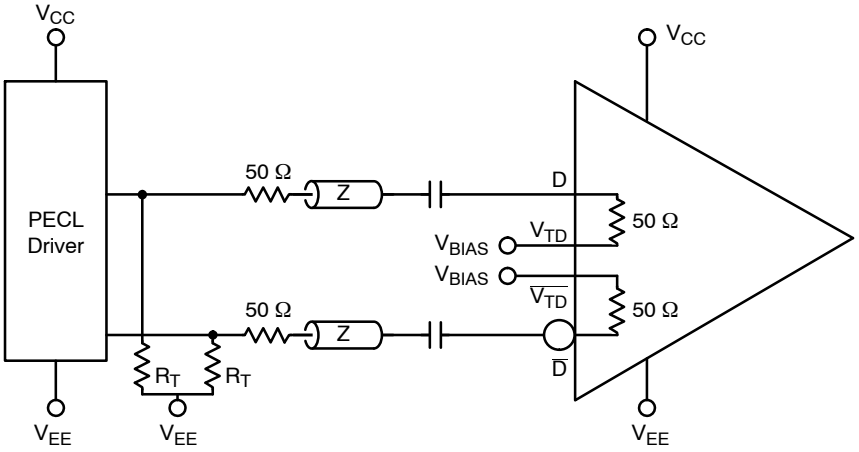

Recommended R_T Values

V_{CC}	R_T
5.0 V	290 Ω
3.3 V	150 Ω
2.5 V	80 Ω

Figure 21. PECL to CML Receiver Interface

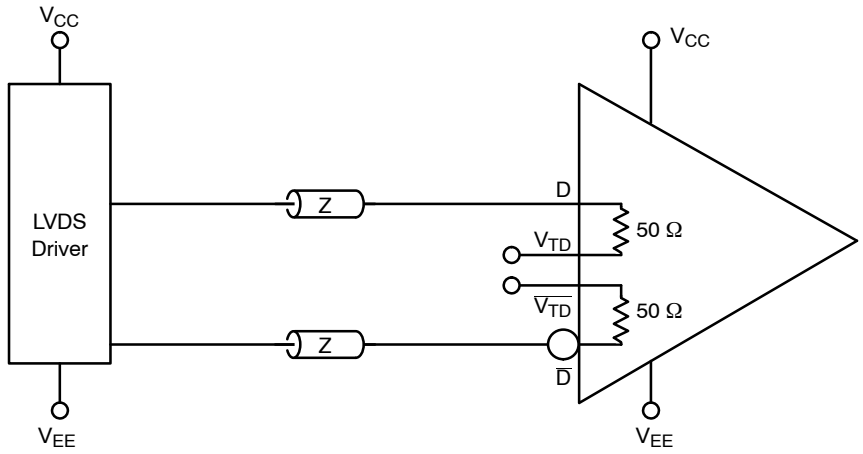

Figure 22. LVDS to CML Receiver Interface

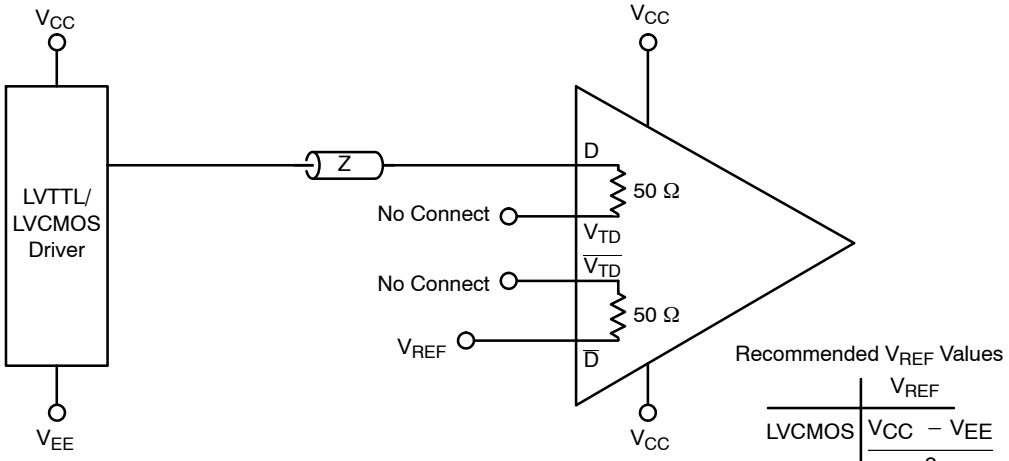

Recommended V_{REF} Values

	V_{REF}
LVCMOS	$\frac{V_{CC} - V_{EE}}{2}$
LVTTL	1.5 V

Figure 23. LVCMOS/LVTTL to CML Receiver Interface

MECHANICAL CASE OUTLINE
PACKAGE DIMENSIONS

QFN16 3x3, 0.5P
CASE 485G
ISSUE G

DATE 08 OCT 2021

SCALE 2:1

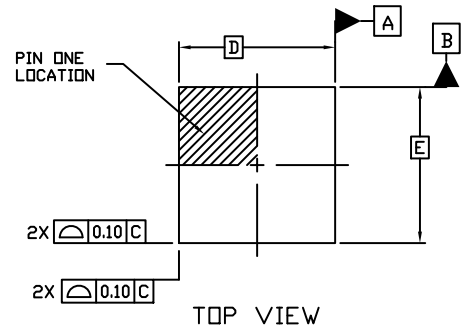

TOP VIEW

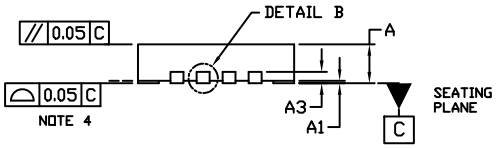

SIDE VIEW

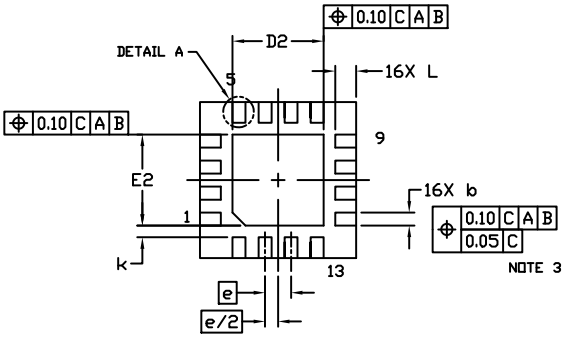

BOTTOM VIEW

NOTES:
1. DIMENSIONING AND TOLERANCING PER ASME Y14.5M, 1994.
2. CONTROLLING DIMENSION: MILLIMETERS
3. DIMENSION b APPLIES TO PLATED TERMINAL AND IS MEASURED BETWEEN 0.15 AND 0.30 MM FROM THE TERMINAL TIP.
4. COPLANARITY APPLIES TO THE EXPOSED PAD AS WELL AS THE TERMINALS.

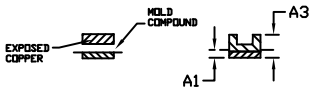

DETAIL B
ALTERNATE CONSTRUCTIONS

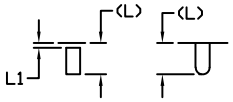

DETAIL A
ALTERNATE TERMINAL CONSTRUCTIONS

	MILLIMETERS		
DIM	MIN.	NOM.	MAX.
A	0.80	0.90	1.00
A1	0.00	0.03	0.05
A3		0.20 REF	
b	0.18	0.24	0.30
D		3.00 BSC	
D2	1.65	1.75	1.85
E		3.00 BSC	
E2	1.65	1.75	1.85
e		0.50 BSC	
k		0.18 TYP	
L	0.30	0.40	0.50
L1	0.00	0.08	0.15

MOUNTING FOOTPRINT

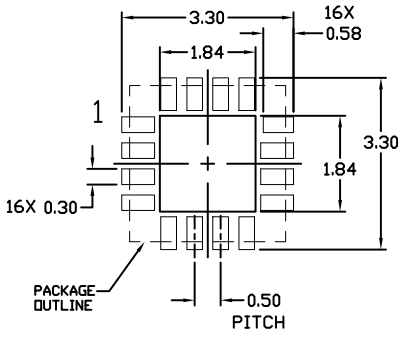

GENERIC MARKING DIAGRAM*



XXXXX = Specific Device Code
A = Assembly Location
L = Wafer Lot
Y = Year
W = Work Week
▪ = Pb−Free Package

(Note: Microdot may be in either location)

*This information is generic. Please refer to device data sheet for actual part marking. Pb−Free indicator, “G” or microdot “▪”, may or may not be present. Some products may not follow the Generic Marking.

DOCUMENT NUMBER:	**98AON04795D**	Electronic versions are uncontrolled except when accessed directly from the Document Repository. Printed versions are uncontrolled except when stamped “CONTROLLED COPY” in red.
DESCRIPTION:	**QFN16 3X3, 0.5P**	**PAGE 1 OF 1**

onsemi and onsemi are trademarks of Semiconductor Components Industries, LLC dba **onsemi** or its subsidiaries in the United States and/or other countries. **onsemi** reserves the right to make changes without further notice to any products herein. **onsemi** makes no warranty, representation or guarantee regarding the suitability of its products for any particular purpose, nor does **onsemi** assume any liability arising out of the application or use of any product or circuit, and specifically disclaims any and all liability, including without limitation special, consequential or incidental damages. **onsemi** does not convey any license under its patent rights nor the rights of others.

© Semiconductor Components Industries, LLC, 2019

onsemi, , and other names, marks, and brands are registered and/or common law trademarks of Semiconductor Components Industries, LLC dba "**onsemi**" or its affiliates and/or subsidiaries in the United States and/or other countries. **onsemi** owns the rights to a number of patents, trademarks, copyrights, trade secrets, and other intellectual property. A listing of **onsemi**'s product/patent coverage may be accessed at www.onsemi.com/site/pdf/Patent−Marking.pdf. **onsemi** reserves the right to make changes at any time to any products or information herein, without notice. The information herein is provided "as−is" and **onsemi** makes no warranty, representation or guarantee regarding the accuracy of the information, product features, availability, functionality, or suitability of its products for any particular purpose, nor does **onsemi** assume any liability arising out of the application or use of any product or circuit, and specifically disclaims any and all liability, including without limitation special, consequential or incidental damages. Buyer is responsible for its products and applications using **onsemi** products, including compliance with all laws, regulations and safety requirements or standards, regardless of any support or applications information provided by **onsemi**. "Typical" parameters which may be provided in **onsemi** data sheets and/or specifications can and do vary in different applications and actual performance may vary over time. All operating parameters, including "Typicals" must be validated for each customer application by customer's technical experts. **onsemi** does not convey any license under any of its intellectual property rights nor the rights of others. **onsemi** products are not designed, intended, or authorized for use as a critical component in life support systems or any FDA Class 3 medical devices or medical devices with a same or similar classification in a foreign jurisdiction or any devices intended for implantation in the human body. Should Buyer purchase or use **onsemi** products for any such unintended or unauthorized application, Buyer shall indemnify and hold **onsemi** and its officers, employees, subsidiaries, affiliates, and distributors harmless against all claims, costs, damages, and expenses, and reasonable attorney fees arising out of, directly or indirectly, any claim of personal injury or death associated with such unintended or unauthorized use, even if such claim alleges that **onsemi** was negligent regarding the design or manufacture of the part. **onsemi** is an Equal Opportunity/Affirmative Action Employer. This literature is subject to all applicable copyright laws and is not for resale in any manner.

ADDITIONAL INFORMATION

TECHNICAL PUBLICATIONS:
Technical Library: www.onsemi.com/design/resources/technical−documentation
onsemi Website: www.onsemi.com

ONLINE SUPPORT: www.onsemi.com/support
For additional information, please contact your local Sales Representative at www.onsemi.com/support/sales