2.5 V/3.3 V 1:8 CML Fanout Buffer

Multi−Level Inputs w/ Internal Termination

NB7L1008M

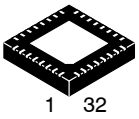

QFN32
MN SUFFIX
CASE 488AM

Description

The NB7L1008M is a high performance differential 1:8 Clock/Data fanout buffer. The NB7L1008M produces eight identical output copies of Clock or Data operating up to 6 GHz or 10.7 Gb/s, respectively. As such, the NB7L1008M is ideal for SONET, GigE, Fiber Channel, Backplane and other Clock/Data distribution applications. The differential inputs incorporate internal 50 Ω termination resistors that are accessed through the VT pin. This feature allows the NB7L1008M to accept various logic standards, such as LVPECL, CML, LVDS, LVCMOS or LVTTL logic levels. The V_{REFAC} reference output can be used to rebias capacitor−coupled differential or single−ended input signals. The 1:8 fanout design was optimized for low output skew applications. The NB7L1008M is a member of the GigaComm™ family of high performance clock products.

Features

- Input Data Rate > 12 Gb/s Typical
- Data Dependent Jitter < 20 ps
- Maximum Input Clock Frequency > 8 GHz Typical
- Random Clock Jitter < 0.8 ps RMS
- Low Skew 1:8 CML Outputs, < 25 ps max
- Multi−Level Inputs, accepts LVPECL, CML, LVDS
- 160 ps Typical Propagation Delay
- 45 ps Typical Rise and Fall Times
- Differential CML Outputs, 400 mV Peak−to−Peak, Typical
- Operating Range: V_{CC} = 2.375 V to 3.6 V, GND = 0 V
- Internal Input Termination Resistors, 50 Ω
- V_{REFAC} Reference Output
- QFN−32 Package, 5 mm x 5 mm
- −40°C to +85°C Ambient Operating Temperature
- These are Pb−Free Devices

MARKING DIAGRAM

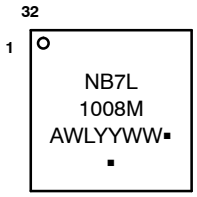

A	= Assembly Location
WL	= Wafer Lot
YY	= Year
WW	= Work Week
▪	= Pb−Free Package

(Note: Microdot may be in either location)

SIMPLIFIED LOGIC DIAGRAM

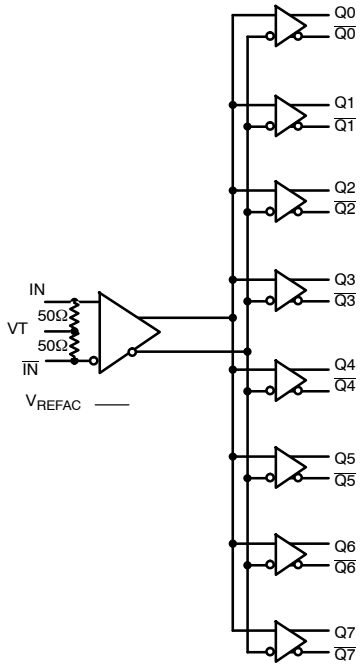

ORDERING INFORMATION

See detailed ordering and shipping information on page 9 of this data sheet.

© Semiconductor Components Industries, LLC, 2013

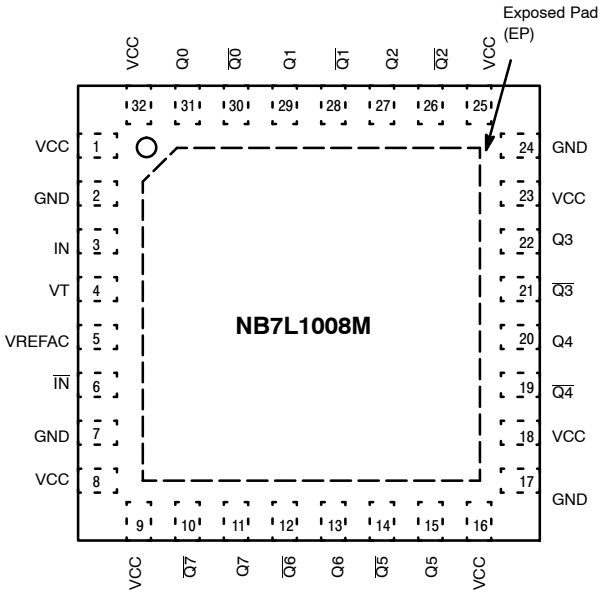

Figure 1. 32−Lead QFN Pinout (Top View)

Table 1. PIN DESCRIPTION

Pin	Name	I/O	Description
3, 6	IN, $\overline{\text{IN}}$	LVPECL, CML, LVDS Input	Non−inverted / Inverted Differential Clock/Data Input. Note 1
4	VT		Internal 50 Ω Termination Pin for IN and $\overline{\text{IN}}$
2, 7 17,24	GND		Negative Supply Voltage. (Note 2)
1, 8, 9, 16, 18, 23, 25, 32	V_{CC}		Positive Supply Voltage. (Note 2)
31, 30, 29, 28, 27, 26, 22, 21, 20, 19, 15, 14, 13, 12, 11, 10	Q0, $\overline{\text{Q0}}$, Q1, $\overline{\text{Q1}}$, Q2, $\overline{\text{Q2}}$, Q3, $\overline{\text{Q3}}$, Q4, $\overline{\text{Q4}}$, Q5, $\overline{\text{Q5}}$, Q6, $\overline{\text{Q6}}$, Q7, $\overline{\text{Q7}}$	CML	Non−inverted / Inverted Differential Output. (Note 1)
5	VREFAC		Output Voltage Reference for Capacitor−Coupled Inputs, only
−	EP	−	The Exposed Pad (EP) on the QFN−24 package bottom is thermally connected to the die for improved heat transfer out of package. The exposed pad must be attached to a heat−sinking conduit. The pad is electrically connected to GND and is recommended to be electrically connected to GND on the PC board.

1. In the differential configuration when the input termination pin (V_T) is connected to a common termination voltage or left open, and if no signal is applied on IN/$\overline{\text{IN}}$, then the device will be susceptible to self−oscillation. Qn/$\overline{\text{Qn}}$ outputs have internal 50 Ω source termination resistors.
2. All V_{CC} and GND pins must be externally connected to the same power supply voltage to guarantee proper device operation.

Table 2. ATTRIBUTES

Characteristics	Value
ESD Protection Human Body Model Machine Model	 > 2 kV > 200 V
Moisture Sensitivity (Note 3) Indefinite Time of the Drypack QFN−32	 Level 1
Flammability Rating Oxygen Index: 28 to 34	 UL 94 V−0 @ 0.125 in
Transistor Count	263
Meets or exceeds JEDEC Spec EIA/JESD78 IC Latchup Test	

3. For additional information, refer to Application Note AND8003/D.

Table 3. MAXIMUM RATINGS

Symbol	Parameter	Condition 1	Condition 2	Rating	Unit
V_{CC}	Positive Power Supply	GND = 0 V		4.0	V
V_{IN}	Input Voltage	GND = 0 V		−0.5 to V_{CC}	V
V_{INPP}	Differential Input Voltage |IN − $\overline{IN}$|			1.89	V
I_{IN}	Input Current Through R_T (50 Ω Resistor)			±40	mA
I_{out}	Output Current	Continuous Surge		34 40	mA
$I_{VFREFAC}$	V_{REFAC} Sink/Source Current			±1.5	mA
T_A	Operating Temperature Range			−40 to +85	°C
T_{stg}	Storage Temperature Range			−65 to +150	°C
θ_{JA}	Thermal Resistance (Junction−to−Ambient) (Note 4) TGSD 51−6 (2S2P Multilayer Test Board) with Filled Thermal Vias	0 lfpm 500 lfpm	QFN−32 QFN−32	31 27	°C/W °C/W
θ_{JC}	Thermal Resistance (Junction−to−Case)	Standard Board	QFN−32	12	°C/W
T_{sol}	Wave Solder Pb−Free			265	°C

Stresses exceeding those listed in the Maximum Ratings table may damage the device. If any of these limits are exceeded, device functionality should not be assumed, damage may occur and reliability may be affected.

4. JEDEC standard multilayer board − 2S2P (2 signal, 2 power) with 8 filled thermal vias under exposed pad.

Table 4. DC CHARACTERISTICS – CML OUTPUT V_{CC} = 2.375 V to 3.6 V, GND = 0 V, T_A = −40°C to 85°C (Note 6)

Symbol	Characteristic		Min	Typ	Max	Unit
POWER SUPPLY						
V_{CC}	Power Supply Voltage	V_{CC} = 3.3 V V_{CC} = 2.5 V	3.0 2.375	3.3 2.5	3.6 2.625	V
POWER SUPPLY CURRENT						
I_{CC}	Power Supply Current, Inputs and Outputs Open			265	315	mA
CML OUTPUTS (Note 5, Figures 10 and 11)						
V_{OH}	Output HIGH Voltage	 V_{CC} = 3.3V V_{CC} = 2.5V	V_{CC} – 30 3270 2470	V_{CC} – 10 3290 2490	V_{CC} 3300 2500	mV
V_{OL}	Output LOW Voltage	 V_{CC} = 3.3V V_{CC} = 2.5V	V_{CC} – 600 2700 1900	V_{CC} – 400 2900 2100	V_{CC} – 350 2950 2150	mV
DIFFERENTIAL INPUTS DRIVEN SINGLE−ENDED (Notes 7 and 8) (Figures 6 and 8)						
V_{IH}	Single−Ended Input HIGH Voltage		V_{th} + 100		V_{CC}	mV
V_{IL}	Single−Ended Input LOW Voltage		GND		V_{th} – 100	mV
V_{th}	Input Threshold Reference Voltage Range		1100		V_{CC} – 100	mV
V_{ISE}	Single−Ended Input Voltage (V_{IH} – V_{IL})		200		1200	mV
V_{REFAC}						
V_{REFAC}	Output Reference Voltage @ 100 μA for Capacitor − Coupled Inputs, Only	 V_{CC} = 3.3 V V_{CC} = 2.5 V	 V_{CC} – 1375 V_{CC} – 1325	 V_{CC} – 1200 V_{CC} – 1200	 V_{CC} – 1100 V_{CC} – 1075	mV
DIFFERENTIAL INPUTS DRIVEN DIFFERENTIALLY (IN, $\overline{IN}$) (Note 9) (Figures 4 and 7)						
V_{IHD}	Differential Input HIGH Voltage		1100		V_{CC}	mV
V_{ILD}	Differential Input LOW Voltage		GND		V_{IHD} – 100	mV
V_{ID}	Differential Input Voltage (V_{IHD} – V_{ILD})		100		1200	mV
I_{IH}	Input HIGH Current		−150	40	+150	μA
I_{IL}	Input LOW Current		−150	5	+150	μA
TERMINATION RESISTORS						
R_{TIN}	Internal Input Termination Resistor		45	50	55	Ω
R_{TOUT}	Internal Output Termination Resistor		45	50	55	Ω

NOTE: Device will meet the specifications after thermal equilibrium has been established when mounted in a test socket or printed circuit board with maintained transverse airflow greater than 500 lfpm.

5. CML outputs loaded with 50 Ω to V_{CC} for proper operation.
6. Input and output parameters vary 1:1 with V_{CC}.
7. V_{th}, V_{IH}, V_{IL}, and V_{ISE} parameters must be complied with simultaneously.
8. V_{th} is applied to the complementary input when operating in single−ended mode.
9. V_{IHD}, V_{ILD}, V_{ID}, and V_{CMR} parameters must be complied with simultaneously.

Table 5. AC CHARACTERISTICS V_{CC} = 2.375 V to 3.6 V, GND = 0 V, T_A = −40°C to 85°C (Note 10)

Symbol	Characteristic	Min	Typ	Max	Unit
f_{DATA}	Maximum Operating Input Data Rate	10	12		Gb/s
f_{INCLK}	Maximum Input Clock Frequency, $V_{OUTPP} \geq$ 200 mV	6	8		GHz
V_{OUTPP}	Output Voltage Amplitude (see Figures 2 and 5, Note 11) $f_{in} \leq$ 4 GHz $f_{in} \leq$ 6 GHz	 200 200	 400 350		mV
V_{CMR}	Input Common Mode Range (Differential Configuration, Note 12, Figure 9)	600		V_{CC} − 50	mV
t_{PLH}, t_{PHL}	Propagation Delay to Output Differential, IN/$\overline{IN}$ to Qn/$\overline{Qn}$	100	160	250	ps
t_{PLH} TC	Propagation Delay Temperature Coefficient −40°C to +85°C		35		fs/°C
t_{DC}	Output Clock Duty Cycle $f_{in} \leq$ 6 GHz	45	49/51	55	%
t_{SKEW}	Duty Cycle Skew (Note 13) Within Device Skew (Note 14) Device to Device Skew (Note 15)		0.15 7 25	1 25 70	ps
t_{JITTER}	Clock Jitter RMS, 1000 Cycles (Note 16) $f_{in} \leq$ 6 GHz Data Dependent Jitter (DDJ) (Note 17) ≤10 Gb/s		0.2 3	0.8 20	ps
V_{INPP}	Input Voltage Swing (Differential Configuration) (Note 18) (Figure 5)	100		1200	mV
t_r, t_f	Output Rise/Fall Times (20% − 80%) Qn, $\overline{Qn}$	20	45	70	ps

NOTE: Device will meet the specifications after thermal equilibrium has been established when mounted in a test socket or printed circuit board with maintained transverse airflow greater than 500 lfpm.

10. Measured using a 400 mV source, 50% duty cycle 1 GHz clock source. All outputs must be loaded with external 50 Ω to V_{CC}. Input edge rates 40 ps (20% − 80%).
11. Output voltage swing is a single−ended measurement operating in differential mode.
12. $VIHD_{MIN}$ ≥ 1100 mV.
13. Duty cycle skew is measured between differential outputs using the deviations of the sum of T_{pw}− and T_{pw}+ @ 1 GHz.
14. Within device skew compares coincident edges.
15. Device to device skew is measured between outputs under identical transition
16. Additive CLOCK jitter with 50% duty cycle clock signal.
17. Additive Peak−to−Peak jitter with input NRZ data at PRBS23.
18. Input voltage swing is a single−ended measurement operating in differential mode.

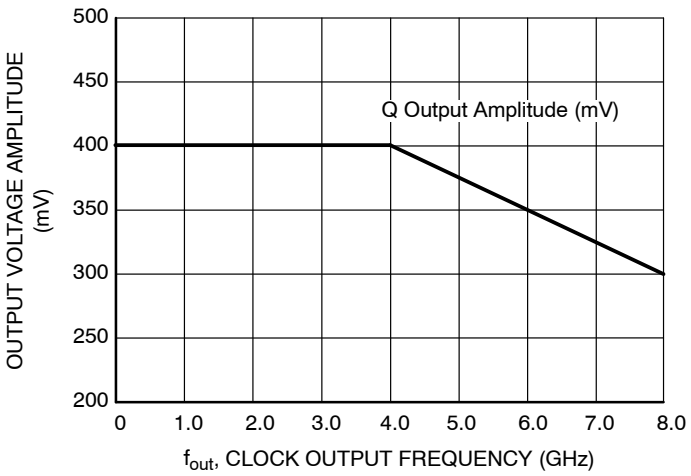

Figure 2. Output Voltage Amplitude (V_{OUTPP}) vs. Input Frequency (f_{in}) at Ambient Temperature (Typical)

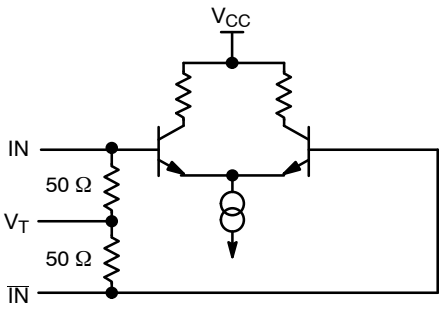

Figure 3. Input Structure

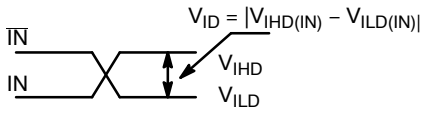

Figure 4. Differential Inputs Driven Differentially

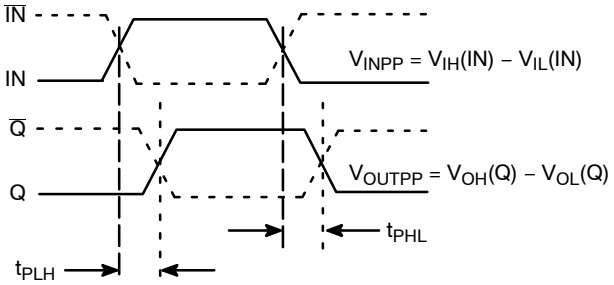

Figure 5. AC Reference Measurement

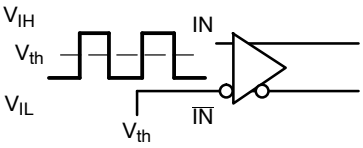

Figure 6. Differential Input Driven Single−Ended

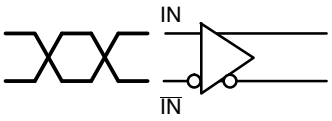

Figure 7. Differential Inputs Driven Differentially

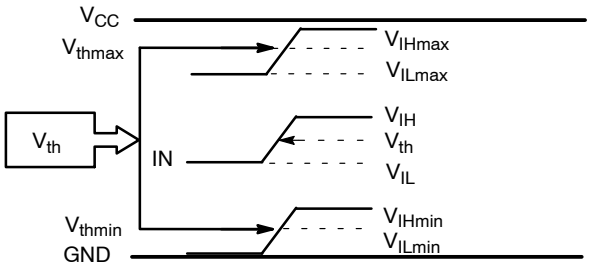

Figure 8. V_{th} Diagram

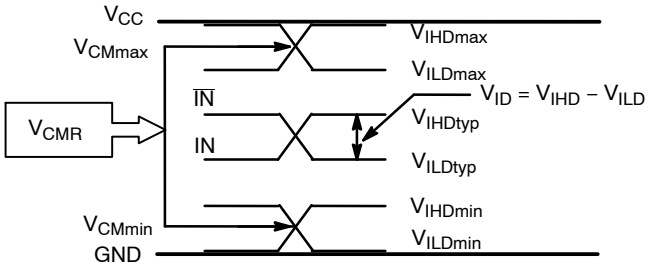

Figure 9. V_{CMR} Diagram

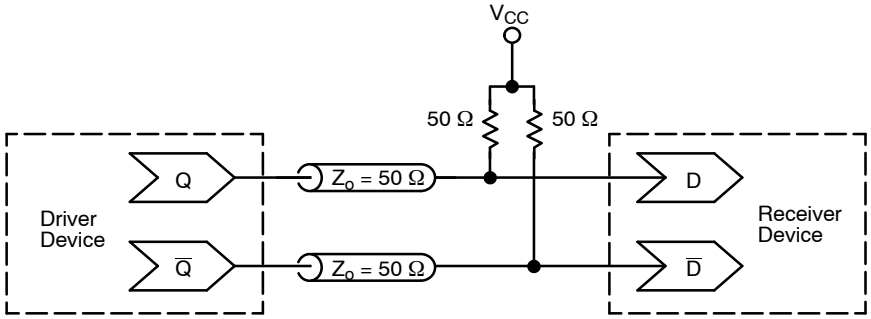

Figure 10. Typical Termination for Output Driver and Device Evaluation (See Application Note AND8173/D)

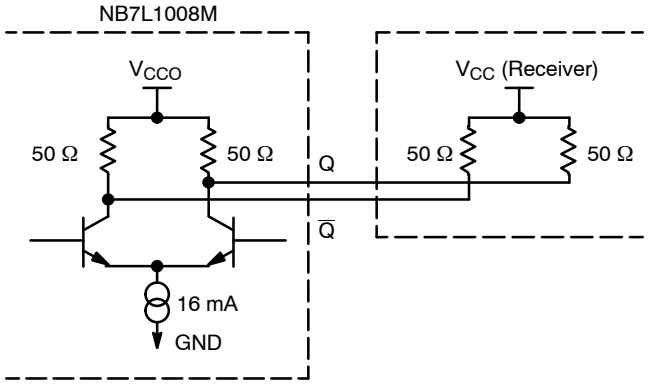

Figure 11. Typical CML Output Structure and Termination

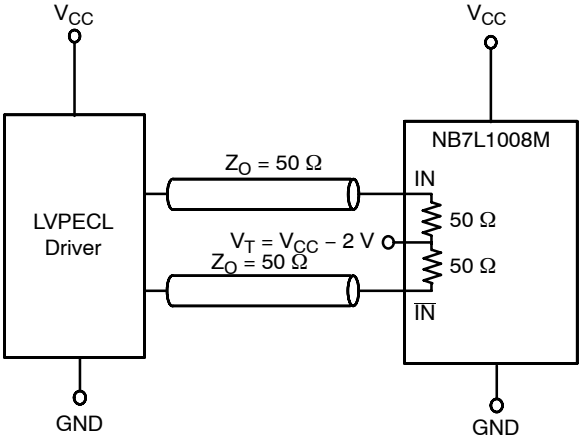

Figure 12. LVPECL Interface

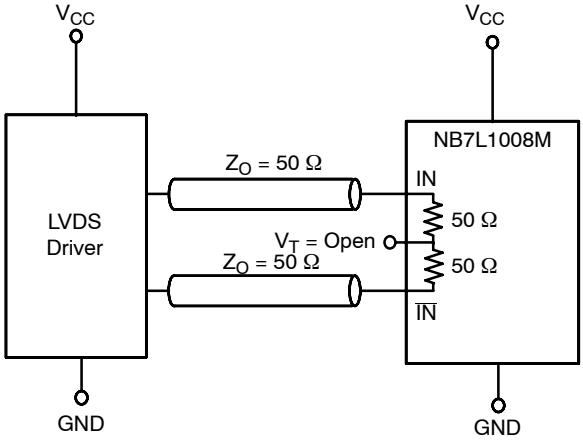

Figure 13. LVDS Interface

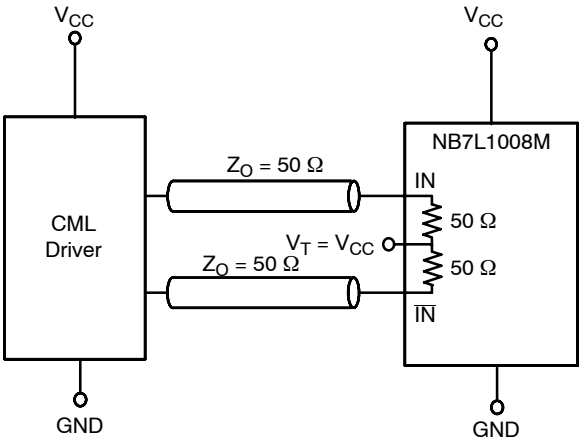

Figure 14. Standard 50 Ω Load CML Interface

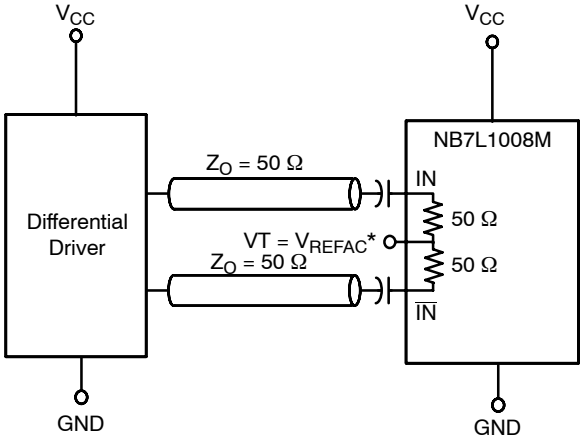

Figure 15. Capacitor−Coupled Differential Interface (V_T Connected to V_{REFAC})

*V_{REFAC} bypassed to ground with a 0.01 μF capacitor

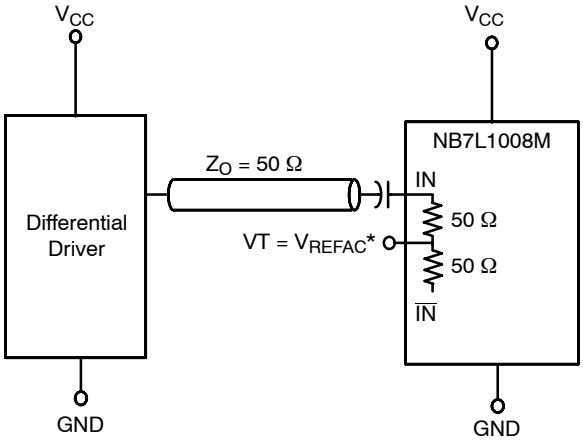

Figure 16. Capacitor−Coupled Single−Ended Interface (V_T Connected to V_{REFAC})

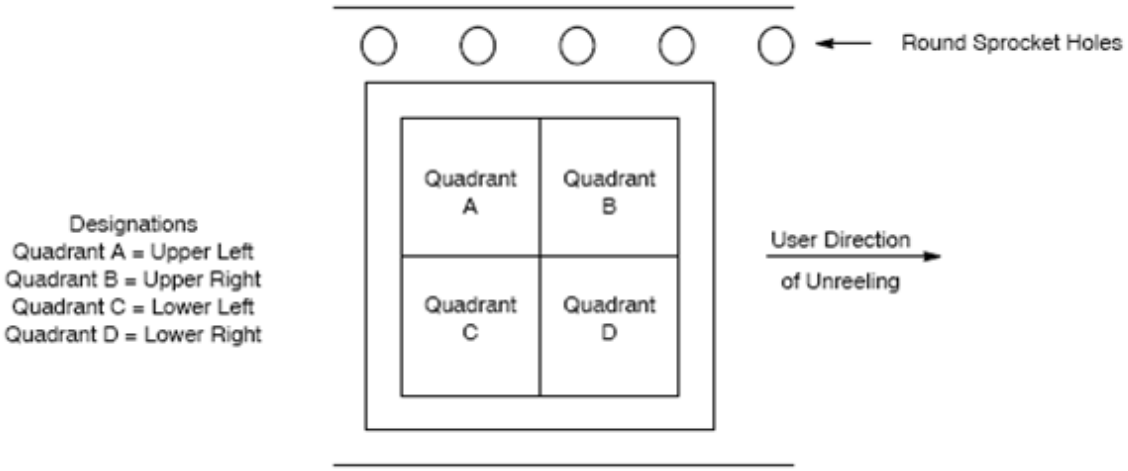

Figure 17. Tape and Reel Pin 1 Quadrant Orientation

ORDERING INFORMATION

Device	Package	Shipping†
NB7L1008MMNG	QFN32 (Pb−Free)	74 Units / Tube
NB7L1008MMNR4G	QFN32 (Pb−Free)	1,000 / Tape & Reel (Pin 1 Orientation in Quadrant B, Figure 17)

†For information on tape and reel specifications, including part orientation and tape sizes, please refer to our Tape and Reel Packaging Specifications Brochure, BRD8011/D.

GigaComm is a trademark of of Semiconductor Components Industries, LLC dba “**onsemi**” or its affiliates and/or subsidiaries in the United States and/or other countries.

MECHANICAL CASE OUTLINE
PACKAGE DIMENSIONS

ON Semiconductor®

QFN32 5x5, 0.5P
CASE 488AM
ISSUE A

DATE 23 OCT 2013

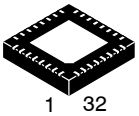

SCALE 2:1

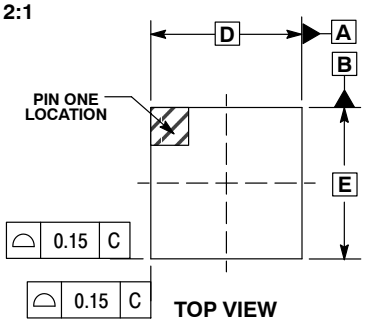

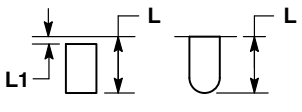

DETAIL A
ALTERNATE TERMINAL CONSTRUCTIONS

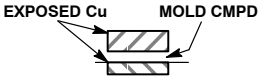

DETAIL B
ALTERNATE CONSTRUCTION

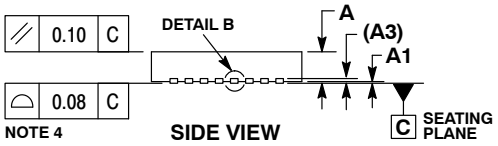

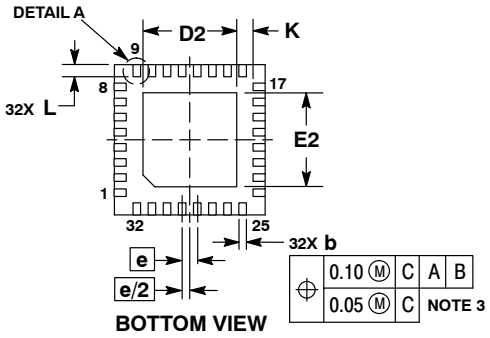

NOTES:
1. DIMENSIONS AND TOLERANCING PER ASME Y14.5M, 1994.
2. CONTROLLING DIMENSION: MILLIMETERS.
3. DIMENSION b APPLIES TO PLATED TERMINAL AND IS MEASURED BETWEEN 0.15 AND 0.30MM FROM THE TERMINAL TIP.
4. COPLANARITY APPLIES TO THE EXPOSED PAD AS WELL AS THE TERMINALS.

	MILLIMETERS	
DIM	MIN	MAX
A	0.80	1.00
A1	---	0.05
A3	0.20 REF	
b	0.18	0.30
D	5.00 BSC	
D2	2.95	3.25
E	5.00 BSC	
E2	2.95	3.25
e	0.50 BSC	
K	0.20	---
L	0.30	0.50
L1	---	0.15

GENERIC MARKING DIAGRAM*

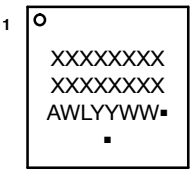

XXXXX = Specific Device Code
A = Assembly Location
WL = Wafer Lot
YY = Year
WW = Work Week
▪ = Pb−Free Package

(Note: Microdot may be in either location)

*This information is generic. Please refer to device data sheet for actual part marking.
Pb−Free indicator, "G" or microdot " ▪", may or may not be present.

RECOMMENDED SOLDERING FOOTPRINT*

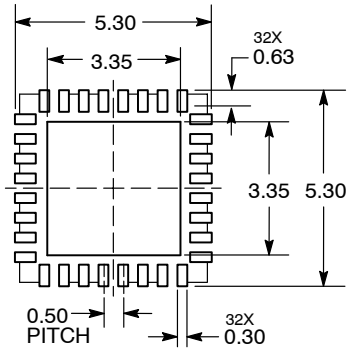

DIMENSION: MILLIMETERS

*For additional information on our Pb−Free strategy and soldering details, please download the ON Semiconductor Soldering and Mounting Techniques Reference Manual, SOLDERRM/D.

DOCUMENT NUMBER:	**98AON20032D**	Electronic versions are uncontrolled except when accessed directly from the Document Repository. Printed versions are uncontrolled except when stamped "CONTROLLED COPY" in red.
DESCRIPTION:	**QFN32 5x5 0.5P**	**PAGE 1 OF 1**

ON Semiconductor and ON are trademarks of Semiconductor Components Industries, LLC dba ON Semiconductor or its subsidiaries in the United States and/or other countries. ON Semiconductor reserves the right to make changes without further notice to any products herein. ON Semiconductor makes no warranty, representation or guarantee regarding the suitability of its products for any particular purpose, nor does ON Semiconductor assume any liability arising out of the application or use of any product or circuit, and specifically disclaims any and all liability, including without limitation special, consequential or incidental damages. ON Semiconductor does not convey any license under its patent rights nor the rights of others.

© Semiconductor Components Industries, LLC, 2019

onsemi, , and other names, marks, and brands are registered and/or common law trademarks of Semiconductor Components Industries, LLC dba "**onsemi**" or its affiliates and/or subsidiaries in the United States and/or other countries. **onsemi** owns the rights to a number of patents, trademarks, copyrights, trade secrets, and other intellectual property. A listing of **onsemi**'s product/patent coverage may be accessed at www.onsemi.com/site/pdf/Patent−Marking.pdf. **onsemi** reserves the right to make changes at any time to any products or information herein, without notice. The information herein is provided "as−is" and **onsemi** makes no warranty, representation or guarantee regarding the accuracy of the information, product features, availability, functionality, or suitability of its products for any particular purpose, nor does **onsemi** assume any liability arising out of the application or use of any product or circuit, and specifically disclaims any and all liability, including without limitation special, consequential or incidental damages. Buyer is responsible for its products and applications using **onsemi** products, including compliance with all laws, regulations and safety requirements or standards, regardless of any support or applications information provided by **onsemi**. "Typical" parameters which may be provided in **onsemi** data sheets and/or specifications can and do vary in different applications and actual performance may vary over time. All operating parameters, including "Typicals" must be validated for each customer application by customer's technical experts. **onsemi** does not convey any license under any of its intellectual property rights nor the rights of others. **onsemi** products are not designed, intended, or authorized for use as a critical component in life support systems or any FDA Class 3 medical devices or medical devices with a same or similar classification in a foreign jurisdiction or any devices intended for implantation in the human body. Should Buyer purchase or use **onsemi** products for any such unintended or unauthorized application, Buyer shall indemnify and hold **onsemi** and its officers, employees, subsidiaries, affiliates, and distributors harmless against all claims, costs, damages, and expenses, and reasonable attorney fees arising out of, directly or indirectly, any claim of personal injury or death associated with such unintended or unauthorized use, even if such claim alleges that **onsemi** was negligent regarding the design or manufacture of the part. **onsemi** is an Equal Opportunity/Affirmative Action Employer. This literature is subject to all applicable copyright laws and is not for resale in any manner.

ADDITIONAL INFORMATION

TECHNICAL PUBLICATIONS:
Technical Library: www.onsemi.com/design/resources/technical−documentation
onsemi Website: www.onsemi.com

ONLINE SUPPORT: www.onsemi.com/support
For additional information, please contact your local Sales Representative at www.onsemi.com/support/sales