TinyLogic UHS D-Type Flip-Flop with 3-STATE Output

NC7SZ374

MARKING DIAGRAMS



SIP6 1.45x1.0
CASE 127EB

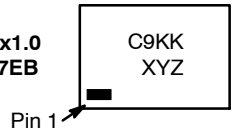

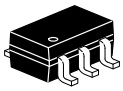

SC−88
CASE 419B−02

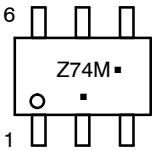

C9, Z74	= Specific Device Code
KK	= 2−Digit Lot Run Traceability Code
XY	= 2−Digit Date Code Format
Z	= Assembly Plant Code
M	= Date Code*
▪	= Pb−Free Package

(Note: Microdot may be in either location)

*Date Code orientation and/or position may vary depending upon manufacturing location.

ORDERING INFORMATION

See detailed ordering, marking and shipping information in the package dimensions section on page 6 of this data sheet.

Description

The NC7SZ374 is a single positive edge−triggered D−type CMOS Flip−Flop with 3−STATE output from **onsemi**'s Ultra High Speed Series of TinyLogic in the space saving SC−88 6−lead package. The device is fabricated with advanced CMOS technology to achieve ultra high speed with high output drive while maintaining low static power dissipation over a very broad V_{CC} operating range. The device is specified to operate over the 1.65 V to 5.5 V V_{CC} range. The inputs and output are high impedance when V_{CC} is 0 V. Inputs tolerate voltages up to 5.5 V independent of V_{CC} operating voltage. This single flip−flop will store the state of the D input that meets the setup and hold time requirements on the LOW−to−HIGH Clock (CP) transition. The output tolerates voltages above V_{CC} in the 3−STATE condition.

Features

- Space Saving SC−88 6−Lead Package
- Ultra Small MicroPak™ Leadless Package
- Ultra High Speed: t_{PD} = 2.6 ns Typ into 50 pF at 5 V V_{CC}
- High Output Drive: ±24 mA at 3 V V_{CC}
- Broad V_{CC} Operating Range: 1.65 V to 5.5 V
- Matches the Performance of LCX when Operated at 3.3 V V_{CC}
- Power Down High Impedance Inputs / Output
- Overvoltage Tolerant Inputs Facilitate 5 V – 3 V Translation
- Patented Noise / EMI Reduction Circuitry Implemented
- These Devices are Pb−Free, Halogen Free/BFR Free and are RoHS Compliant

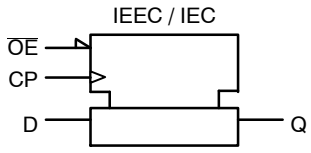

Figure 1. Logic Symbol

© Semiconductor Components Industries, LLC, 2004

Connection Diagrams

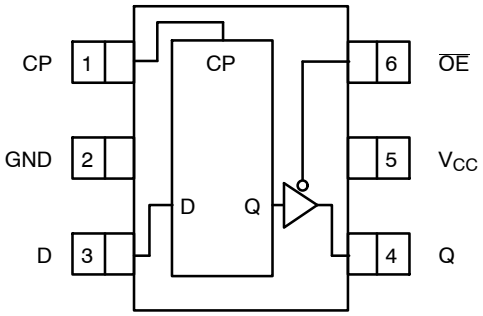

Figure 2. SC−88 (Top View)

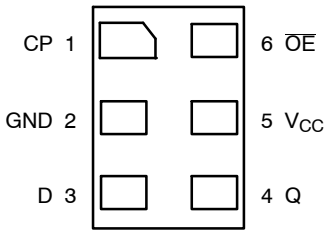

Figure 4. MicroPak (Top Through View)

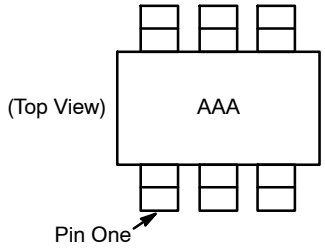

AAA represents Product Code Top Mark − see ordering code.

NOTE: Orientation of Top Mark determines Pin One location. Read the top product code mark left to right, Pin One is the lower left pin (see diagram).

Figure 3. Pin 1 Orientation

PIN DESCRIPTIONS

Pin Name	Description
D	Data Input
CP	Clock Pulse Input
$\overline{OE}$	Output Enable Input
Q	Flip−Flop Output

FUNCTION TABLE

Inputs			Output
CP	**D**	**$\overline{OE}$**	**Q**
↑	L	L	L
↑	H	L	H
↓	X	L	Q_n
X	X	H	Z

H = HIGH Logic Level
L = LOW Logic Level
X = Immaterial
Z = High Impedance
Q_n = No Change in Data

ABSOLUTE MAXIMUM RATINGS

Symbol	Parameter		Min	Max	Unit
V_{CC}	Supply Voltage		−0.5	+6.5	V
V_{IN}	DC Input Voltage		−0.5	+6.5	V
V_{OUT}	DC Output Voltage		−0.5	+6.5	V
I_{IK}	DC Input Diode Current	V_{IN} < 0 V	−	−50	mA
I_{OK}	DC Output Diode Current	V_{OUT} < 0 V	−	−50	mA
I_{OUT}	DC Output Source / Sink Current		−	±50	mA
I_{CC} / I_{GND}	DC V_{CC} / GND Current		−	±50	mA
T_{STG}	Storage Temperature Range		−65	+150	°C
T_J	Junction Temperature under Bias		−	150	°C
T_L	Junction Lead Temperature (Soldering, 10 Seconds)		−	260	°C
P_D	Power Dissipation in Still Air	SC−88	−	332	mW
		MicroPak	−	812	

Stresses exceeding those listed in the Maximum Ratings table may damage the device. If any of these limits are exceeded, device functionality should not be assumed, damage may occur and reliability may be affected.

RECOMMENDED OPERATING CONDITIONS

Symbol	Parameter	Conditions	Min	Max	Unit
V_{CC}	Supply Voltage Operating		1.65	5.5	V
	Supply Voltage Data Retention		1.5	5.5	
V_{IN}	Input Voltage		0	5.5	V
V_{OUT}	Output Voltage	Active State	0	V_{CC}	V
		3−STATE	0	5.5	V
t_r, t_f	Input Rise and Fall Time	V_{CC} = 1.8 V, 2.5 V ±0.2 V	0	20	ns/V
		V_{CC} = 3.3 V ±0.3 V	0	10	
		V_{CC} = 5.5 V ±0.5 V	0	5	
T_A	Operating Temperature		−40	+85	°C
θ_{JA}	Thermal Resistance	SC−88	−	377	°C/W
		MicroPak	−	154	

Functional operation above the stresses listed in the Recommended Operating Ranges is not implied. Extended exposure to stresses beyond the Recommended Operating Ranges limits may affect device reliability.

1. Unused inputs must be held HIGH or LOW. They may not float.

DC ELECTICAL CHARACTERISTICS

Symbol	Parameter	V_{CC} (V)	Conditions		T_A = +25°C			T_A = −40 to +85°C		Unit
					Min	Typ	Max	Min	Max	
V_{IH}	HIGH Level Control Input Voltage	1.65 to 1.95			0.65 V_{CC}	–	–	0.65 V_{CC}	–	V
		2.3 to 5.5			0.7 V_{CC}	–	–	0.7 V_{CC}	–	
V_{IL}	LOW Level Control Input Voltage	1.65 to 1.95			–	–	0.35 V_{CC}	–	0.35 V_{CC}	V
		2.3 to 5.5			–	–	0.3 V_{CC}	–	0.3 V_{CC}	
V_{OH}	HIGH Level Control Output Voltage	1.65	V_{IN} = V_{IH} or V_{IL}	I_{OH} = −100 μA	1.55	1.65	–	1.55	–	V
		1.8			1.7	1.8	–	1.7	–	
		2.3			2.2	2.3	–	2.2	–	
		3.0			2.9	3.0	–	2.9	–	
		4.5			4.4	4.5	–	4.4	–	
		1.65		I_{OH} = −4 mA	1.24	1.52	–	1.29	–	
		2.3		I_{OH} = −8 mA	1.9	2.15	–	1.9	–	
		3.0		I_{OH} = −16 mA	2.4	2.8	–	2.4	–	
		3.0		I_{OH} = −24 mA	2.3	2.68	–	2.3	–	
		4.5		I_{OH} = −32 mA	3.8	4.2	–	3.8	–	
V_{OL}	LOW Level Control Output Voltage	1.65	V_{IN} = V_{IH} or V_{IL}	I_{OL} = 100 μA	–	0.0	0.1	–	0.1	V
		1.8			–	0.0	0.1	–	0.1	
		2.3			–	0.0	0.1	–	0.1	
		3.0			–	0.0	0.1	–	0.1	
		4.5			–	0.0	0.1	–	0.1	
		1.65		I_{OL} = 4 mA	–	0.08	0.24	–	0.24	
		2.3		I_{OL} = 8 mA	–	0.10	0.3	–	0.3	
		3.0		I_{OL} = 16 mA	–	0.15	0.4	–	0.4	
		3.0		I_{OL} = 24 mA	–	0.22	0.55	–	0.55	
		4.5		I_{OL} = 32 mA	–	0.22	0.55	–	0.55	
I_{IN}	Input Leakage Current	1.65 to 5.5	0 ≤ V_{IN} ≤ 5.5 V		–	–	±0.1	–	±1.0	μA
I_{OZ}	3−STATE Output Leakage	1.65 to 5.5	V_{IN} = V_{IL} or V_{IH} 0 ≤ V_{OUT} ≤ 5.5 V		–	–	±0.5	–	±5.0	μA
I_{OFF}	Power Off Leakage Current	0.0	V_{IN} or V_{OUT} = 5.5 V		–	–	1.0	–	10	μA
I_{CC}	Quiescent Supply Current	1.65 to 5.5	V_{IN} = 5.5 V, GND		–	–	1.0	–	10.0	μA

AC ELECTRICAL CHARACTERISTICS

Symbol	Parameter	V_{CC} (V)	Conditions	T_A = +25°C			T_A = −40 to +85°C		Unit
				Min	Typ	Max	Min	Max	
f_{MAX}	Maximum Clock Frequency (Figures 5, 7)	1.65	C_L = 50 pF, R_D = 500 Ω, S_1 = Open	–	–	–	100	–	MHz
		1.8		–	–	–	100	–	
		2.5 ±0.2		–	–	–	125	–	
		3.3 ±0.3		–	–	–	150	–	
		5.0 ±0.5		–	–	–	175	–	
t_{PLH}, t_{PHL}	Propagation Delay, CP to Q (Figures 5, 7)	1.65	C_L = 15 pF, R_D = 1 MΩ, S_1 = Open	–	9.7	1.50	–	16.5	ns
		1.8		–	6.5	10.0	–	11.0	
		2.5 ±0.2		–	3.8	6.5	–	7.0	
		3.3 ±0.3		–	2.8	4.5	–	5.0	
		5.0 ±0.5		–	2.2	3.5	–	3.8	
		3.3 ±0.3	C_L = 50 pF, R_D = 500 Ω, S_1 = Open	–	3.4	5.5	–	6.2	
		5.0 ±0.5		–	2.6	4.0	–	4.7	
t_{PZL}, t_{PZH}	Output Enable Time (Figures 5, 8)	1.65	C_L = 50 pF, V_I = 2 x V_{CC}, R_U, R_D = 500 Ω, S_1 = GND for t_{PZH} S_1 = V_I for t_{PZL}	–	9.0	13.5	–	14.3	ns
		1.8		–	6.0	9.0	–	9.5	
		2.5 ±0.2		–	3.7	6.0	–	6.6	
		3.3 ±0.3		–	2.8	5.0	–	5.3	
		5.0 ±0.5		–	2.2	3.7	–	3.9	
t_{PLZ}, t_{PHZ}	Output Disable Time (Figures 5, 8)	1.65	C_L = 50 pF, V_I = 2 x V_{CC}, R_U, R_D = 500 Ω, S_1 = GND for t_{PHZ} S_1 = V_I for t_{PLZ}	–	7.7	12.0	–	13.0	ns
		1.8		–	5.1	8.0	–	8.5	
		2.5 ±0.2		–	3.5	6.0	–	6.3	
		3.3 ±0.3		–	2.8	4.5	–	4.7	
		5.0 ±0.5		–	2.23	3.7	–	3.9	
t_S	Setup Time, CP to D (Figures 5, 9)	2.5 ±0.2	C_L = 50 pF, R_D = 500 Ω, S_1 = Open	–	–	–	2.5	–	ns
		3.3 ±0.3		–	–	–	2.0	–	
		5.0 ±0.5			–	–	1.5	–	
t_H	Hold Time, CP to D (Figures 5, 9)	2.5 ±0.2	C_L = 50 pF, R_D = 500 Ω, S_1 = Open	–	–	–	1.5	–	ns
		3.3 ±0.3		–	–	–	1.5	–	
		5.0 ±0.5		–	–	–	1.5	–	
t_W	Pulse Width, CP (Figures 5, 9)	2.5 ±0.2	C_L = 50 pF, R_D = 500 Ω, S_1 = Open	–	–	–	3.0	–	ns
		3.3 ±0.3		–	–	–	2.8	–	
		5.0 ±0.5		–	–	–	2.5	–	

CAPACITANCE (T_A = +25°C, f = 1 MHz)

Symbol	Parameter	Condition	Typ	Max	Units
C_{IN}	Input Capacitance	V_{CC} = Open, V_{IN} = 0 V or V_{CC}	3	–	pF
C_{OUT}	Output Capacitance	V_{CC} = 3.3 V, V_{IN} = 0 V or V_{CC}	4	–	pF
C_{PD}	Power Dissipation Capacitance (Note 2)	V_{CC} = 3.3 V V_{CC} = 5.0 V	10 12	– –	pF

2. C_{PD} is defined as the value of the internal equivalent capacitance which is derived from dynamic operating current consumption (I_{CCD}) at no output loading and operating at 50% duty cycle. (See Figure 6)
C_{PD} is related to I_{CCD} dynamic operating current by the expression: I_{CCD} = (C_{PD}) (V_{CC}) (f_{IN}) + (I_{CC}static).

AC Loading and Waveforms

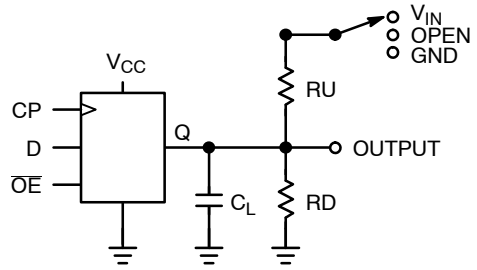

C_L includes load and stray capacitance
Input PRR = 1.0 MHz, t_W = 500 ns.

Figure 5. AC Test Circuit

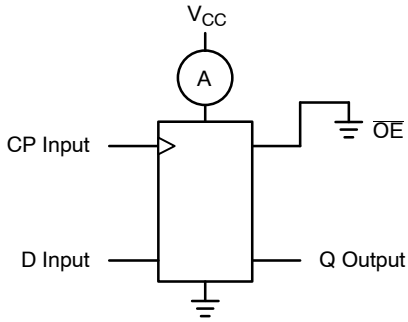

CP Input = AC Waveform; $t_r = t_f$ = 1.8 ns;
CP Input PRR = 10 MHz; Duty Cycle = 50%
D Input PRR = 5 MHz; Duty Cycle = 50%.

Figure 6. I_{CCD} Test Circuit

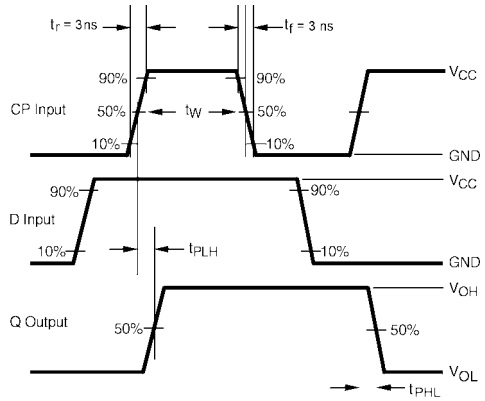

Figure 7. AC Waveforms

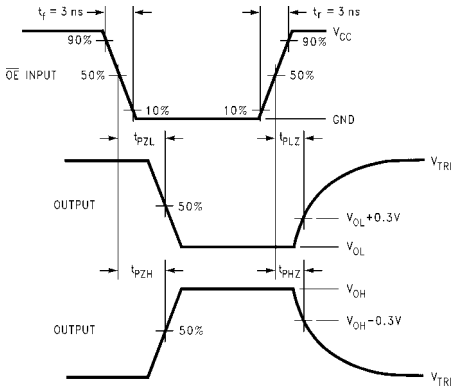

Figure 8. AC Waveforms

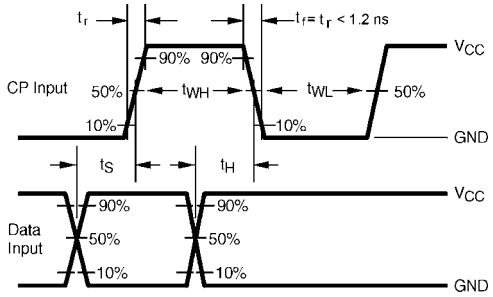

Figure 9. AC Waveforms

ORDERING INFORMATION

Device	Top Mark	Packages	Shipping†
NC7SZ374P6X	Z74	SC−88	3000 / Tape & Reel
NC7SZ374P6X−L22347	Z74	SC−88	3000 / Tape & Reel
NC7SZ374L6X	C9	SIP6, MicroPak	5000 / Tape & Reel
NC7SZ374L6X−L22175	C9	SIP6, MicroPak	5000 / Tape & Reel

†For information on tape and reel specifications, including part orientation and tape sizes, please refer to our Tape and Reel Packaging Specifications Brochure, BRD8011/D.

MicroPak is trademark of Semiconductor Components Industries, LLC (SCILLC) or its subsidiaries in the United States and/or other countries.

MECHANICAL CASE OUTLINE
PACKAGE DIMENSIONS

ON Semiconductor®

SIP6 1.45X1.0
CASE 127EB
ISSUE O

DATE 31 AUG 2016

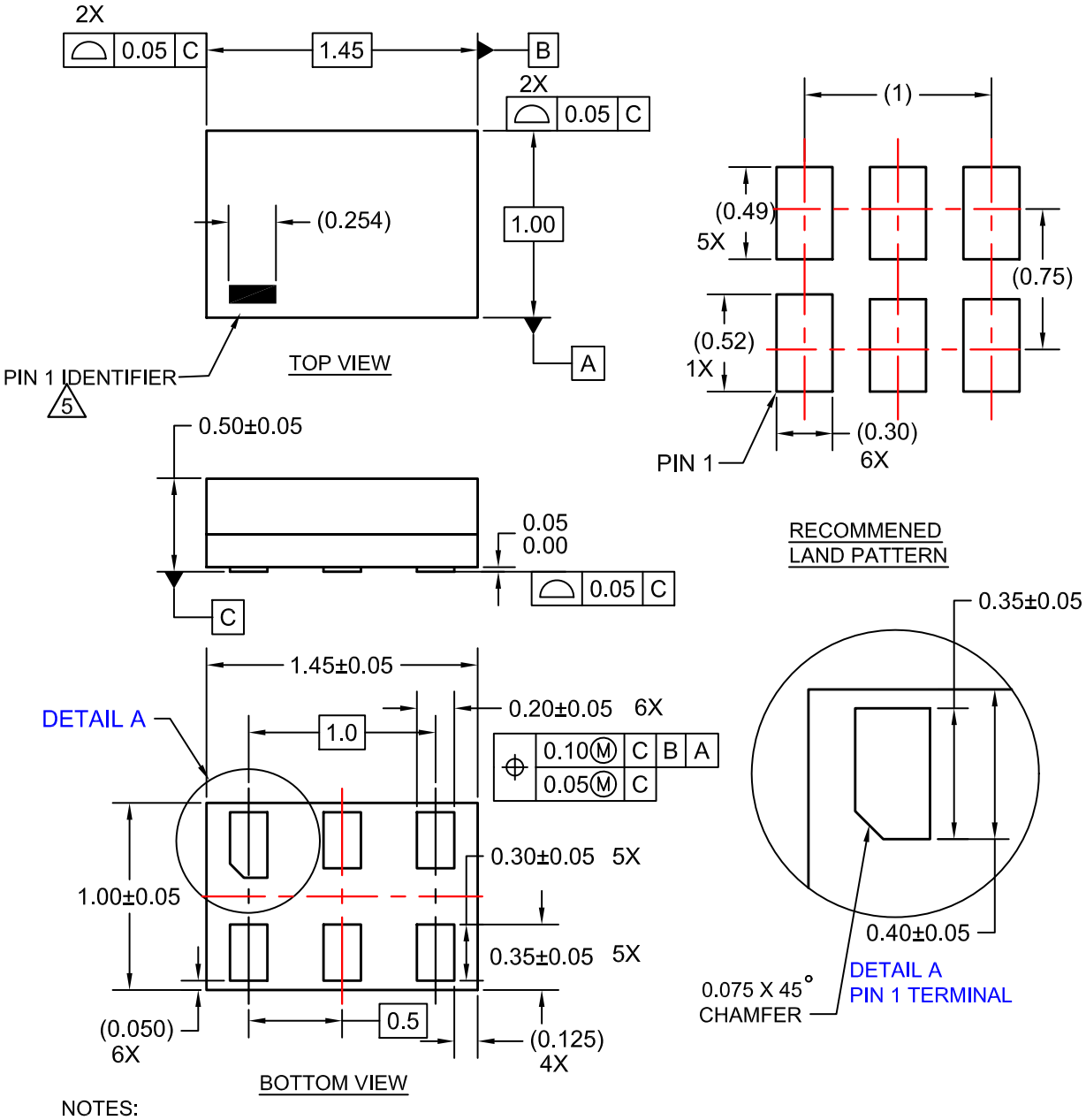

NOTES:

1. CONFORMS TO JEDEC STANDARD MO-252 VARIATION UAAD
2. DIMENSIONS ARE IN MILLIMETERS
3. DRAWING CONFORMS TO ASME Y14.5M-2009
4. PIN ONE IDENTIFIER IS 2X LENGTH OF ANY OTHER LINE IN THE MARK CODE LAYOUT.

DOCUMENT NUMBER:	**98AON13590G**	Electronic versions are uncontrolled except when accessed directly from the Document Repository. Printed versions are uncontrolled except when stamped "CONTROLLED COPY" in red.
DESCRIPTION:	**SIP6 1.45X1.0**	**PAGE 1 OF 1**

ON Semiconductor and ON are trademarks of Semiconductor Components Industries, LLC dba ON Semiconductor or its subsidiaries in the United States and/or other countries. ON Semiconductor reserves the right to make changes without further notice to any products herein. ON Semiconductor makes no warranty, representation or guarantee regarding the suitability of its products for any particular purpose, nor does ON Semiconductor assume any liability arising out of the application or use of any product or circuit, and specifically disclaims any and all liability, including without limitation special, consequential or incidental damages. ON Semiconductor does not convey any license under its patent rights nor the rights of others.



SC−88 2.00x1.25x0.90, 0.65P
CASE 419B−02
ISSUE Z

DATE 18 APR 2024

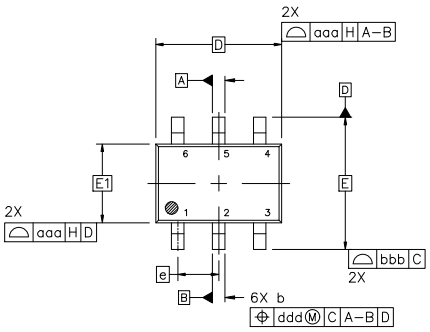

TOP VIEW

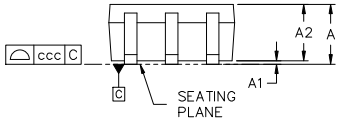

SIDE VIEW

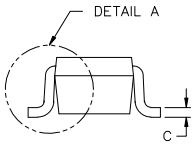

END VIEW

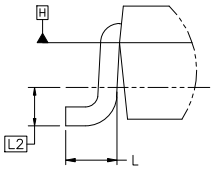

DETAIL A
SCALE 2:1

NOTES:

1. DIMENSIONING AND TOLERANCING CONFORM TO ASME Y14.5−2018.
2. ALL DIMENSION ARE IN MILLIMETERS.
3. DIMENSIONS D AND E1 DO NOT INCLUDE MOLD FLASH, PROTRUSIONS, OR GATE BURRS. MOLD FLASH, PROTRUSIONS, OR GATE BURRS SHALL NOT EXCEED 0.20 PER END.
4. DIMENSIONS D AND E1 AT THE OUTERMOST EXTREMES OF THE PLASTIC BODY AND DATUM H.
5. DATUMS A AND B ARE DETERMINED AT DATUM H.
6. DIMENSIONS b AND c APPLY TO THE FLAT SECTION OF THE LEAD BETWEEN 0.08 AND 0.15 FROM THE TIP.
7. DIMENSION b DOES NOT INCLUDE DAMBAR PROTRUSION. ALLOWABLE DAMBAR PROTRUSION SHALL BE 0.08 TOTAL IN EXCESS OF DIMENSION b AT MAXIMUM MATERIAL CONDITION. THE DAMBAR CANNOT BE LOCATED ON THE LOWER RADIUS OF THE FOOT.

	MILLIMETERS		
DIM	MIN.	NOM.	MAX.
A	−−−	−−−	1.10
A1	0.00	−−−	0.10
A2	0.70	0.90	1.00
b	0.15	0.20	0.25
c	0.08	0.15	0.22
D	2.00 BSC		
E	2.10 BSC		
E1	1.25 BSC		
e	0.65 BSC		
L	0.26	0.36	0.46
L2	0.15 BSC		
aaa	0.15		
bbb	0.30		
ccc	0.10		
ddd	0.10		

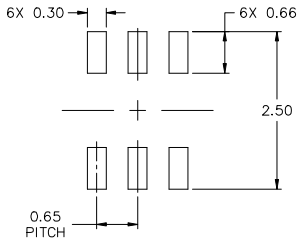

RECOMMENDED MOUNTING FOOTPRINT*

* FOR ADDITIONAL INFORMATION ON OUR Pb−FREE STRATEGY AND SOLDERING DETAILS, PLEASE DOWNLOAD THE ONSEMI SOLDERING AND MOUNTING TECHNIQUES REFERENCE MANUAL, SOLDERRM/D.

GENERIC MARKING DIAGRAM*

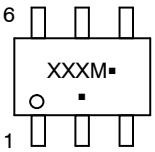

XXX = Specific Device Code
M = Date Code*
▪ = Pb−Free Package

(Note: Microdot may be in either location)

*Date Code orientation and/or position may vary depending upon manufacturing location.

*This information is generic. Please refer to device data sheet for actual part marking. Pb−Free indicator, “G” or microdot “▪”, may or may not be present. Some products may not follow the Generic Marking.

STYLES ON PAGE 2

DOCUMENT NUMBER:	**98ASB42985B**	Electronic versions are uncontrolled except when accessed directly from the Document Repository. Printed versions are uncontrolled except when stamped “CONTROLLED COPY” in red.	
DESCRIPTION:	**SC−88 2.00x1.25x0.90, 0.65P**		**PAGE 1 OF 2**

onsemi and onsemi are trademarks of Semiconductor Components Industries, LLC dba **onsemi** or its subsidiaries in the United States and/or other countries. **onsemi** reserves the right to make changes without further notice to any products herein. **onsemi** makes no warranty, representation or guarantee regarding the suitability of its products for any particular purpose, nor does **onsemi** assume any liability arising out of the application or use of any product or circuit, and specifically disclaims any and all liability, including without limitation special, consequential or incidental damages. **onsemi** does not convey any license under its patent rights nor the rights of others.

SC−88 2.00x1.25x0.90, 0.65P
CASE 419B−02
ISSUE Z

DATE 18 APR 2024

STYLE 1:
PIN 1. EMITTER 2
2. BASE 2
3. COLLECTOR 1
4. EMITTER 1
5. BASE 1
6. COLLECTOR 2

STYLE 2:
CANCELLED

STYLE 3:
CANCELLED

STYLE 4:
PIN 1. CATHODE
2. CATHODE
3. COLLECTOR
4. EMITTER
5. BASE
6. ANODE

STYLE 5:
PIN 1. ANODE
2. ANODE
3. COLLECTOR
4. EMITTER
5. BASE
6. CATHODE

STYLE 6:
PIN 1. ANODE 2
2. N/C
3. CATHODE 1
4. ANODE 1
5. N/C
6. CATHODE 2

STYLE 7:
PIN 1. SOURCE 2
2. DRAIN 2
3. GATE 1
4. SOURCE 1
5. DRAIN 1
6. GATE 2

STYLE 8:
CANCELLED

STYLE 9:
PIN 1. EMITTER 2
2. EMITTER 1
3. COLLECTOR 1
4. BASE 1
5. BASE 2
6. COLLECTOR 2

STYLE 10:
PIN 1. SOURCE 2
2. SOURCE 1
3. GATE 1
4. DRAIN 1
5. DRAIN 2
6. GATE 2

STYLE 11:
PIN 1. CATHODE 2
2. CATHODE 2
3. ANODE 1
4. CATHODE 1
5. CATHODE 1
6. ANODE 2

STYLE 12:
PIN 1. ANODE 2
2. ANODE 2
3. CATHODE 1
4. ANODE 1
5. ANODE 1
6. CATHODE 2

STYLE 13:
PIN 1. ANODE
2. N/C
3. COLLECTOR
4. EMITTER
5. BASE
6. CATHODE

STYLE 14:
PIN 1. VREF
2. GND
3. GND
4. IOUT
5. VEN
6. VCC

STYLE 15:
PIN 1. ANODE 1
2. ANODE 2
3. ANODE 3
4. CATHODE 3
5. CATHODE 2
6. CATHODE 1

STYLE 16:
PIN 1. BASE 1
2. EMITTER 2
3. COLLECTOR 2
4. BASE 2
5. EMITTER 1
6. COLLECTOR 1

STYLE 17:
PIN 1. BASE 1
2. EMITTER 1
3. COLLECTOR 2
4. BASE 2
5. EMITTER 2
6. COLLECTOR 1

STYLE 18:
PIN 1. VIN1
2. VCC
3. VOUT2
4. VIN2
5. GND
6. VOUT1

STYLE 19:
PIN 1. I OUT
2. GND
3. GND
4. V CC
5. V EN
6. V REF

STYLE 20:
PIN 1. COLLECTOR
2. COLLECTOR
3. BASE
4. EMITTER
5. COLLECTOR
6. COLLECTOR

STYLE 21:
PIN 1. ANODE 1
2. N/C
3. ANODE 2
4. CATHODE 2
5. N/C
6. CATHODE 1

STYLE 22:
PIN 1. D1 (i)
2. GND
3. D2 (i)
4. D2 (c)
5. VBUS
6. D1 (c)

STYLE 23:
PIN 1. Vn
2. CH1
3. Vp
4. N/C
5. CH2
6. N/C

STYLE 24:
PIN 1. CATHODE
2. ANODE
3. CATHODE
4. CATHODE
5. CATHODE
6. CATHODE

STYLE 25:
PIN 1. BASE 1
2. CATHODE
3. COLLECTOR 2
4. BASE 2
5. EMITTER
6. COLLECTOR 1

STYLE 26:
PIN 1. SOURCE 1
2. GATE 1
3. DRAIN 2
4. SOURCE 2
5. GATE 2
6. DRAIN 1

STYLE 27:
PIN 1. BASE 2
2. BASE 1
3. COLLECTOR 1
4. EMITTER 1
5. EMITTER 2
6. COLLECTOR 2

STYLE 28:
PIN 1. DRAIN
2. DRAIN
3. GATE
4. SOURCE
5. DRAIN
6. DRAIN

STYLE 29:
PIN 1. ANODE
2. ANODE
3. COLLECTOR
4. EMITTER
5. BASE/ANODE
6. CATHODE

STYLE 30:
PIN 1. SOURCE 1
2. DRAIN 2
3. DRAIN 2
4. SOURCE 2
5. GATE 1
6. DRAIN 1

Note: Please refer to datasheet for style callout. If style type is not called out in the datasheet refer to the device datasheet pinout or pin assignment.

DOCUMENT NUMBER:	**98ASB42985B**	Electronic versions are uncontrolled except when accessed directly from the Document Repository. Printed versions are uncontrolled except when stamped "CONTROLLED COPY" in red.	
DESCRIPTION:	**SC−88 2.00x1.25x0.90, 0.65P**		**PAGE 2 OF 2**

onsemi and ONSEMI are trademarks of Semiconductor Components Industries, LLC dba **onsemi** or its subsidiaries in the United States and/or other countries. **onsemi** reserves the right to make changes without further notice to any products herein. **onsemi** makes no warranty, representation or guarantee regarding the suitability of its products for any particular purpose, nor does **onsemi** assume any liability arising out of the application or use of any product or circuit, and specifically disclaims any and all liability, including without limitation special, consequential or incidental damages. **onsemi** does not convey any license under its patent rights nor the rights of others.

© Semiconductor Components Industries, LLC, 2019

onsemi, , and other names, marks, and brands are registered and/or common law trademarks of Semiconductor Components Industries, LLC dba "**onsemi**" or its affiliates and/or subsidiaries in the United States and/or other countries. **onsemi** owns the rights to a number of patents, trademarks, copyrights, trade secrets, and other intellectual property. A listing of **onsemi**'s product/patent coverage may be accessed at www.onsemi.com/site/pdf/Patent−Marking.pdf. **onsemi** reserves the right to make changes at any time to any products or information herein, without notice. The information herein is provided "as−is" and **onsemi** makes no warranty, representation or guarantee regarding the accuracy of the information, product features, availability, functionality, or suitability of its products for any particular purpose, nor does **onsemi** assume any liability arising out of the application or use of any product or circuit, and specifically disclaims any and all liability, including without limitation special, consequential or incidental damages. Buyer is responsible for its products and applications using **onsemi** products, including compliance with all laws, regulations and safety requirements or standards, regardless of any support or applications information provided by **onsemi**. "Typical" parameters which may be provided in **onsemi** data sheets and/or specifications can and do vary in different applications and actual performance may vary over time. All operating parameters, including "Typicals" must be validated for each customer application by customer's technical experts. **onsemi** does not convey any license under any of its intellectual property rights nor the rights of others. **onsemi** products are not designed, intended, or authorized for use as a critical component in life support systems or any FDA Class 3 medical devices or medical devices with a same or similar classification in a foreign jurisdiction or any devices intended for implantation in the human body. Should Buyer purchase or use **onsemi** products for any such unintended or unauthorized application, Buyer shall indemnify and hold **onsemi** and its officers, employees, subsidiaries, affiliates, and distributors harmless against all claims, costs, damages, and expenses, and reasonable attorney fees arising out of, directly or indirectly, any claim of personal injury or death associated with such unintended or unauthorized use, even if such claim alleges that **onsemi** was negligent regarding the design or manufacture of the part. **onsemi** is an Equal Opportunity/Affirmative Action Employer. This literature is subject to all applicable copyright laws and is not for resale in any manner.

ADDITIONAL INFORMATION

TECHNICAL PUBLICATIONS:
Technical Library: www.onsemi.com/design/resources/technical−documentation
onsemi Website: www.onsemi.com

ONLINE SUPPORT: www.onsemi.com/support
For additional information, please contact your local Sales Representative at www.onsemi.com/support/sales