TinyLogic UHS Dual Buffer with 3-STATE Outputs

NC7WZ126

Description

The NC7WZ126 is a Dual Non−Inverting Buffer with independent active HIGH enables for the 3−STATE outputs. The Ultra High Speed device is fabricated with advanced CMOS technology to achieve superior switching performance with high output drive while maintaining low static power dissipation over a broad V_{CC} operating range. The device is specified to operate over the 1.65 V to 5.5 V V_{CC} operating range. The inputs and outputs are high impedance when V_{CC} is 0 V. Inputs tolerate voltages up to 5.5 V independent of V_{CC} operating range. Outputs tolerate voltages above V_{CC} when in the 3−STATE condition.

Features

- Space Saving US8 Surface Mount Package
- MicroPak™ Pb−Free Leadless Package
- Ultra High Speed: t_{PD} 2.6 ns Typ. into 50 pF at 5 V V_{CC}
- High Output Drive: ±24 mA at 3 V V_{CC}
- Broad V_{CC} Operating Range: 1.65 V to 5.5 V
- Matches the Performance of LCX when Operated at 3.3 V V_{CC}
- Power Down High Impedance Inputs / Outputs
- Overvoltage Tolerant Inputs Facilitate 5 V to 3 V Translation
- Outputs are Overvoltage Tolerant in 3−STATE Mode
- Patented Noise / EMI Reduction Circuitry Implemented
- These Devices are Pb−Free, Halogen Free/BFR Free and are RoHS Compliant

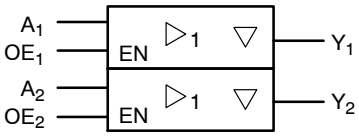

Figure 1. Logic Symbol

MARKING DIAGRAMS



UQFN8
1.6X1.6, 0.5P
CASE 523AY



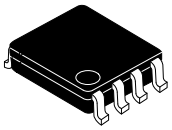

US8
CASE 846AN



T6, WZ26	= Specific Device Code
KK	= 2−Digit Lot Run Traceability Code
XY	= 2−Digit Date Code Format
Z	= Assembly Plant Code
A	= Assembly Site
L	= Wafer Lot Number
YW	= Assembly Start Week

ORDERING INFORMATION

See detailed ordering, marking and shipping information in the package dimensions section on page 6 of this data sheet.

© Semiconductor Components Industries, LLC, 2005

Connection Diagrams

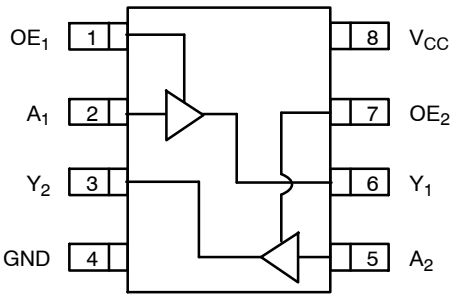

Figure 2. Connection Diagram (Top View)

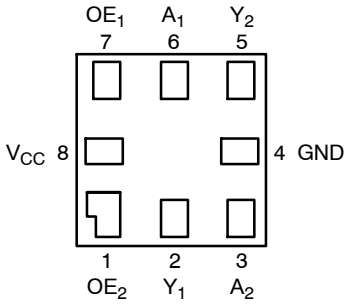

Figure 3. Pad Assignments for MicroPak (Top Thru View)

PIN DESCRIPTIONS

Pin Names	Description
OE_n	Enable Inputs for 3−STATE Outputs
A_n	Inputs
Y_n	3−STATE Outputs

FUNCTION TABLE

Inputs		Output
OE	**A_n**	**Y_n**
H	L	L
H	H	H
L	L	Z
L	H	Z

H = HIGH Logic Level
L = LOW Logic Level
Z = 3−STATE

ABSOLUTE MAXIMUM RATINGS

Symbol	Parameter		Min	Max	Unit
V_{CC}	Supply Voltage		−0.5	6.5	V
V_{IN}	DC Input Voltage (Note 1)		−0.5	6.5	V
V_{OUT}	DC Output Voltage		−0.5	6.5	V
I_{IK}	DC Input Diode Current	V_{IN} < 0 V	−	−50	mA
I_{OK}	DC Output Diode Current	V_{OUT} < 0 V	−	−50	mA
I_{OUT}	DC Output Source / Sink Current		−	±50	mA
I_{CC} / I_{GND}	DC V_{CC} / GND Current		−	±100	mA
T_{STG}	Storage Temperature Range		−65	+150	°C
T_J	Junction Temperature under Bias		−	+150	°C
T_L	Junction Lead Temperature (Soldering, 10 Seconds)		−	+260	°C
P_D	Power Dissipation in Still Air	US8 MicroPak−8	− −	500 539	mW

Stresses exceeding those listed in the Maximum Ratings table may damage the device. If any of these limits are exceeded, device functionality should not be assumed, damage may occur and reliability may be affected.

1. The input and output negative voltage ratings may be exceeded is the input and output diode current ratings are observed.

RECOMMENDED OPERATING CONDITIONS

Symbol	Parameter		Min	Max	Unit
V_{CC}	Supply Voltage Operating		1.65	5.5	V
	Supply Voltage Data Retention		1.5	5.5	
V_{IN}	Input Voltage		0	5.5	V
V_{OUT}	Output Voltage	Active State	0	V_{CC}	V
		3−State	0	5.5	V
T_A	Operating Temperature		−40	+85	°C
t_r, t_f	Input Rise and Fall Time	V_{CC} = 1.8 V ±0.15 V, 2.5 V ±0.2 V	0	20	ns/V
		V_{CC} = 3.3 V ±0.3 V	0	10	
		V_{CC} = 5.0 V ±0.5 V	0	5	
θ_{JA}	Thermal Resistance	US8 MicroPak−8	− −	250 232	°C/W

Functional operation above the stresses listed in the Recommended Operating Ranges is not implied. Extended exposure to stresses beyond the Recommended Operating Ranges limits may affect device reliability.

2. Unused inputs must be held HIGH or LOW. They may not float.

DC ELECTICAL CHARACTERISTICS

Symbol	Parameter	Conditions		V_{CC} (V)	T_A = +25°C			T_A = −40 to +85°C		Unit
					Min	Typ	Max	Min	Max	
V_{IH}	HIGH Level Input Voltage			1.65 to 1.95	0.65 V_{CC}	–	–	0.65 V_{CC}	–	V
				2.3 to 5.5	0.7 V_{CC}	–	–	0.7 V_{CC}	–	
V_{IL}	LOW Level Input Voltage			1.65 to 1.95	–	–	0.35 V_{CC}	–	0.35 V_{CC}	V
				2.3 to 5.5	–	–	0.3 V_{CC}	–	0.3 V_{CC}	
V_{OH}	HIGH Level Output Voltage	V_{IN} = V_{IH} or V_{IL}	I_{OH} = −100 μA	1.65	1.55	1.65	–	1.55	–	V
				2.3	2.2	2.3	–	2.2	–	
				3.0	2.9	3.0	–	2.9	–	
				4.5	4.4	4.5	–	4.4	–	
		V_{IN} = V_{IH} or V_{IL}	I_{OH} = −4 mA	1.65	1.29	1.52	–	1.29	–	
			I_{OH} = −8 mA	2.3	1.9	2.15	–	1.9	–	
			I_{OH} = −16 mA	3.0	2.4	2.80	–	2.4	–	
			I_{OH} = −24 mA	3.0	2.3	2.68	–	2.3	–	
			I_{OH} = −32 mA	4.5	3.8	4.20	–	3.8	–	
V_{OL}	LOW Level Output Voltage	V_{IN} = V_{IH} or V_{IL}	I_{OL} = 100 μA	1.65	–	0.0	0.10	–	0.10	V
				2.3	–	0.0	0.10	–	0.10	
				3.0	–	0.0	0.10	–	0.10	
				4.5	–	0.0	0.10	–	0.10	
		V_{IN} = V_{IH} or V_{IL}	I_{OL} = 4 mA	1.65	–	0.08	0.24	–	0.24	
			I_{OL} = 8 mA	2.3	–	0.10	0.3	–	0.3	
			I_{OL} = 16 mA	3.0	–	0.15	0.4	–	0.4	
			I_{OL} = 24 mA	3.0	–	0.22	0.55	–	0.55	
			I_{OL} = 32 mA	4.5	–	0.22	0.55	–	0.55	
I_{IN}	Input Leakage Current	V_{IN} = 5.5 V, GND		1.65 to 5.5	–	–	±0.1	–	±1	μA
I_{OZ}	3−STATE Output Leakage	V_{IN} = V_{IH} or V_{IL} 0 ≤ V_{OUT} ≤ 5.5 V		1.65 to 5.5	–	–	±0.5	–	±5	μA
I_{OFF}	Power Off Leakage Current	V_{IN} or V_{OUT} = 5.5 V		0.0	–	–	1	–	10	μA
I_{CC}	Quiescent Supply Current	V_{IN} = 5.5 V, GND		1.65 to 5.5	–	–	1	–	10	μA

NOISE CHARACTERISTICS

Symbol	Parameter	Conditions	V_{CC} (V)	T_A = +25°C		Unit
				Typ	Max	
V_{OLP} (Note 3)	Quiet Output Maximum Dynamic V_{OL}	C_L = 50 pF	5.0	–	1.0	V
V_{OLV} (Note 3)	Quiet Output Minimum Dynamic V_{OL}	C_L = 50 pF	5.0	–	1.0	V
V_{OHV} (Note 3)	Quiet Output Minimum Dynamic V_{OH}	C_L = 50 pF	5.0	–	4.0	V
V_{IHD} (Note 3)	Minimum HIGH Level Dynamic Input Voltage	C_L = 50 pF	5.0	–	3.5	V
V_{ILD} (Note 3)	Maximum LOW Level Dynamic Input Voltage	C_L = 50 pF	5.0	–	1.5	V

3. Parameter guaranteed by design.

AC ELECTRICAL CHARACTERISTICS

Symbol	Parameter	Conditions	V_{CC} (V)	T_A = +25°C			T_A = −40 to +85°C		Unit
				Min	Typ	Max	Min	Max	
t_{PLH} t_{PHL}	Propagation Delay A_n to Yn (Figure 4, 6)	C_L = 15 pF RD = 1 MΩ S_1 = OPEN	1.8 ±0.15	–	–	12.0	–	13.0	ns
			2.5 ±0.2	–	–	7.5	–	8.0	
			3.3 ±0.3	–	–	5.2	–	5.5	
			5.0 ±0.5	–	–	4.5	–	4.8	
		C_L = 50 pF, RD = 500 Ω S_1 = OPEN	3.3 ±0.3	–	–	5.7	–	6.0	
			5.0 ±0.5	–	–	5.0	–	5.3	
t_{OSLH} t_{OSHL}	Output to Output Skew (Note 4) (Figure 4, 6)	C_L = 50 pF, RD = 500 Ω S_1 = OPEN	3.3 ±0.3	–	–	1.0	–	1.0	ns
			5.0 ±0.5	–	–	0.8	–	0.8	
t_{PZL} t_{PZH}	Output Enable Time (Figure 4, 6)	C_L = 50 pF RD,RU = 500 Ω S_1 = GND for t_{PZH} S_1 = V_I for t_{PZL} V_I = 2 x V_{CC}	1.8 ±0.15	–	–	14.0	–	15.0	ns
			2.5 ±0.2	–	–	8.5	–	9.0	
			3.3 ±0.3	–	–	6.2	–	6.5	
			5.0 ±0.5	–	–	5.5	–	5.8	
t_{PLZ} t_{PHZ}	Output Disable Time (Figure 4, 6)	C_L = 50 pF RD,RU = 500 Ω S_1 = GND for t_{PZH} S_1 = V_I for t_{PZL} V_I = 2 x V_{CC}	1.8 ±0.15	–	–	12.0	–	13.0	ns
			2.5 ±0.2	–	–	8.0	–	8.5	
			3.3 ±0.3	–	–	5.7	–	6.0	
			5.0 ±0.5	–	–	4.7	–	5.0	
C_{IN}	Input Capacitance		0	–	2.5	–	–	–	pF
C_{OUT}	Output Capacitance		5.0	–	4	–	–	–	pF
C_{PD}	Power Dissipation Capacitance (Figure 5)	(Note 5)	3.3	–	10	–	–	–	pF
			5.0	–	12	–	–	–	

4. Parameter guaranteed by design. $t_{OSLH} = |t_{PLHmax} - t_{PLHmin}|$; $t_{OSHL} = |t_{PHLmax} - t_{PHLmin}|$.
5. C_{PD} is defined as the value of the internal equivalent capacitance which is derived from dynamic operating current consumption (I_{CCD}) at no output loading and operating at 50% duty cycle. (see Figure 5) C_{PD} is related to I_{CCD} dynamic operating current by the expression: I_{CCD} = (CPD) (V_{CC}) (f_{IN}) + (I_{CC}static).

AC Loading and Waveforms

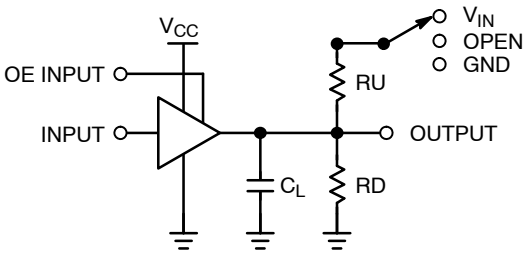

C_L includes load and stray capacitance
Input PRR = 1.0 MHz; t_W = 500 ns

Figure 4. AC Test Circuit

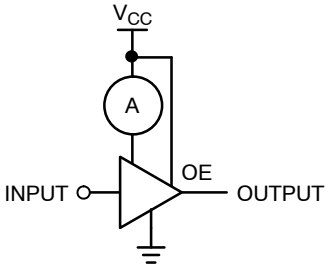

Input = AC Waveform; $t_r = t_f$ = 1.8 ns;
PRR = 10 MHz; Duty Cycle = 50%.

Figure 5. I_{CCD} Test Circuit

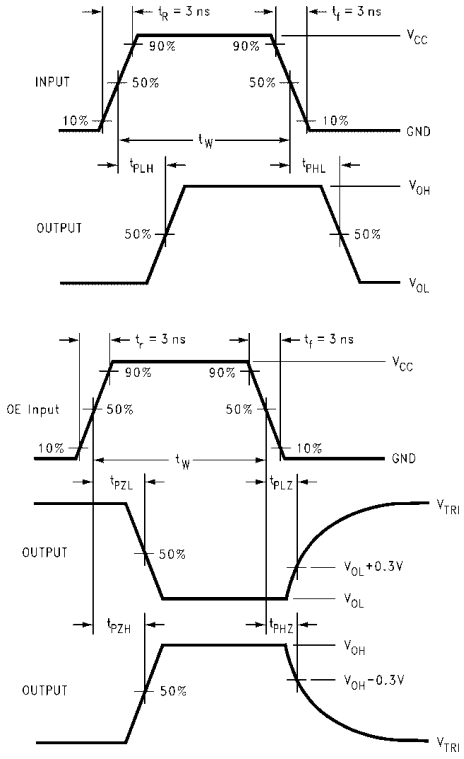

Figure 6. AC Waveforms

ORDERING INFORMATION

Order Number	Top Mark	Package	Shipping†
NC7WZ126K8X	WZ26	8−Lead US8, JEDEC MO−187, Variation CA 3.1 mm Wide	3000 / Tape & Reel
NC7WZ126L8X	T6	8−Lead MicroPak, 1.6 mm Wide (Pb−Free)	5000 / Tape & Reel
NC7WZ126L8X−L22185	T6	8−Lead MicroPak, 1.6 mm Wide (Pb−Free)	5000 / Tape & Reel

†For information on tape and reel specifications, including part orientation and tape sizes, please refer to our Tape and Reel Packaging Specifications Brochure, BRD8011/D.
6. Pb−Free package per JEDEC J−STD−020B.

MicroPak is trademark of Semiconductor Components Industries, LLC (SCILLC) or its subsidiaries in the United States and/or other countries.

UQFN8 1.6X1.6, 0.5P
CASE 523AY
ISSUE O

DATE 31 AUG 2016

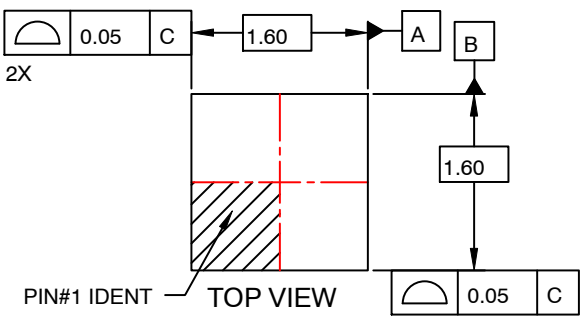

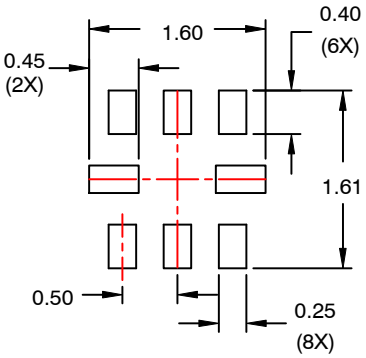

RECOMMENDED
LAND PATTERN

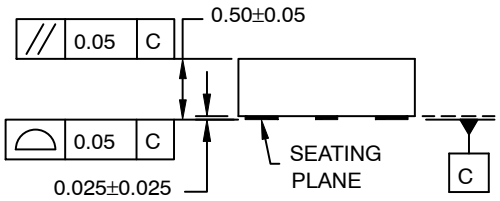

SIDE VIEW

NOTES:

A. PACKAGE CONFORMS TO JEDEC MO−255 VARIATION UAAD.

B. DIMENSIONS ARE IN MILLIMETERS.

C. DIMENSIONS AND TOLERANCES PER ASME Y14.5M, 2009.

D. LAND PATTERN RECOMMENDATION IS EXISTING INDUSTRY LAND PATTERN.

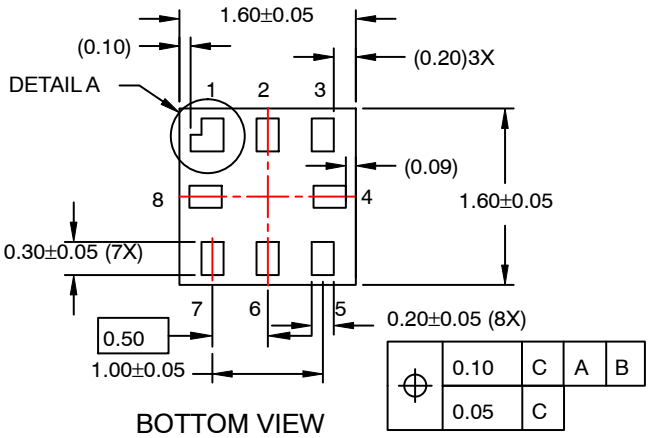

BOTTOM VIEW

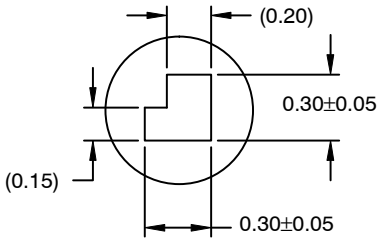

DETAIL A
SCALE : 2X

DOCUMENT NUMBER:	**98AON13591G**	Electronic versions are uncontrolled except when accessed directly from the Document Repository. Printed versions are uncontrolled except when stamped "CONTROLLED COPY" in red.
DESCRIPTION:	**UQFN8 1.6X1.6, 0.5P**	**PAGE 1 OF 1**

ON Semiconductor and ON are trademarks of Semiconductor Components Industries, LLC dba ON Semiconductor or its subsidiaries in the United States and/or other countries. ON Semiconductor reserves the right to make changes without further notice to any products herein. ON Semiconductor makes no warranty, representation or guarantee regarding the suitability of its products for any particular purpose, nor does ON Semiconductor assume any liability arising out of the application or use of any product or circuit, and specifically disclaims any and all liability, including without limitation special, consequential or incidental damages. ON Semiconductor does not convey any license under its patent rights nor the rights of others.

© Semiconductor Components Industries, LLC, 2019

US8
CASE 846AN
ISSUE O

DATE 31 DEC 2016

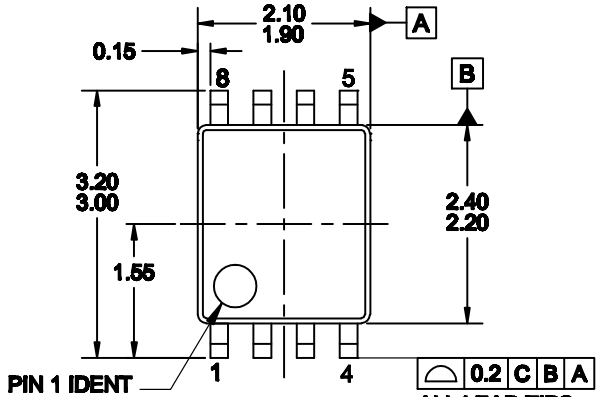

TOP VIEW

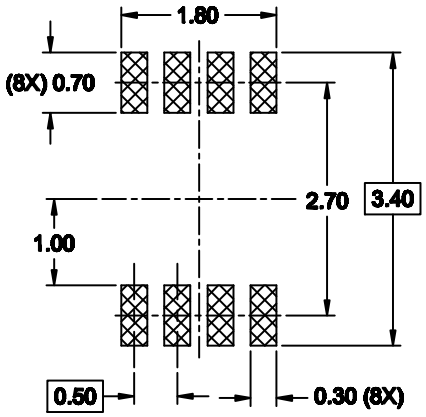

RECOMMENDED LAND PATTERN

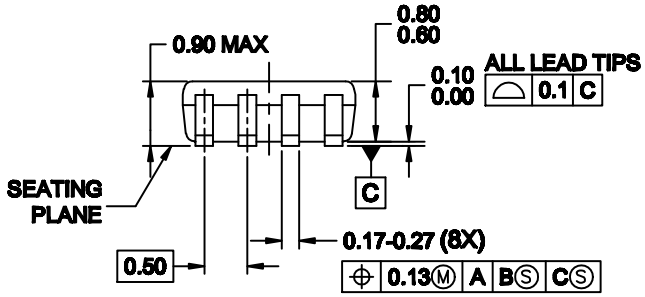

SIDE VIEW

NOTES:

A. CONFORMS TO JEDEC REGISTRATION MO-187

B. DIMENSIONS ARE IN MILLIMETERS.

C. DIMENSIONS ARE EXCLUSIVE OF BURRS, MOLD FLASH, AND TIE BAR EXTRUSIONS.

D. DIMENSIONS AND TOLERANCES PER ANSI Y14.5M, 1994.

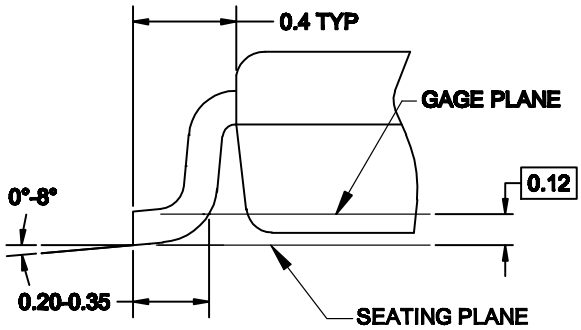

DETAIL A

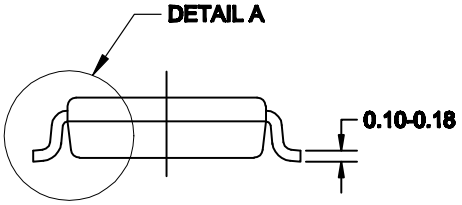

DOCUMENT NUMBER:	**98AON13778G**	Electronic versions are uncontrolled except when accessed directly from the Document Repository. Printed versions are uncontrolled except when stamped "CONTROLLED COPY" in red.	
DESCRIPTION:	**US8**		**PAGE 1 OF 1**

ON Semiconductor and ON are trademarks of Semiconductor Components Industries, LLC dba ON Semiconductor or its subsidiaries in the United States and/or other countries. ON Semiconductor reserves the right to make changes without further notice to any products herein. ON Semiconductor makes no warranty, representation or guarantee regarding the suitability of its products for any particular purpose, nor does ON Semiconductor assume any liability arising out of the application or use of any product or circuit, and specifically disclaims any and all liability, including without limitation special, consequential or incidental damages. ON Semiconductor does not convey any license under its patent rights nor the rights of others.

© Semiconductor Components Industries, LLC, 2019

onsemi, , and other names, marks, and brands are registered and/or common law trademarks of Semiconductor Components Industries, LLC dba "**onsemi**" or its affiliates and/or subsidiaries in the United States and/or other countries. **onsemi** owns the rights to a number of patents, trademarks, copyrights, trade secrets, and other intellectual property. A listing of **onsemi**'s product/patent coverage may be accessed at www.onsemi.com/site/pdf/Patent−Marking.pdf. **onsemi** reserves the right to make changes at any time to any products or information herein, without notice. The information herein is provided "as−is" and **onsemi** makes no warranty, representation or guarantee regarding the accuracy of the information, product features, availability, functionality, or suitability of its products for any particular purpose, nor does **onsemi** assume any liability arising out of the application or use of any product or circuit, and specifically disclaims any and all liability, including without limitation special, consequential or incidental damages. Buyer is responsible for its products and applications using **onsemi** products, including compliance with all laws, regulations and safety requirements or standards, regardless of any support or applications information provided by **onsemi**. "Typical" parameters which may be provided in **onsemi** data sheets and/or specifications can and do vary in different applications and actual performance may vary over time. All operating parameters, including "Typicals" must be validated for each customer application by customer's technical experts. **onsemi** does not convey any license under any of its intellectual property rights nor the rights of others. **onsemi** products are not designed, intended, or authorized for use as a critical component in life support systems or any FDA Class 3 medical devices or medical devices with a same or similar classification in a foreign jurisdiction or any devices intended for implantation in the human body. Should Buyer purchase or use **onsemi** products for any such unintended or unauthorized application, Buyer shall indemnify and hold **onsemi** and its officers, employees, subsidiaries, affiliates, and distributors harmless against all claims, costs, damages, and expenses, and reasonable attorney fees arising out of, directly or indirectly, any claim of personal injury or death associated with such unintended or unauthorized use, even if such claim alleges that **onsemi** was negligent regarding the design or manufacture of the part. **onsemi** is an Equal Opportunity/Affirmative Action Employer. This literature is subject to all applicable copyright laws and is not for resale in any manner.

ADDITIONAL INFORMATION

TECHNICAL PUBLICATIONS:
Technical Library: www.onsemi.com/design/resources/technical−documentation
onsemi Website: www.onsemi.com

ONLINE SUPPORT: www.onsemi.com/support
For additional information, please contact your local Sales Representative at www.onsemi.com/support/sales