Transceiver for KNX Twisted Pair Networks

NCN5121

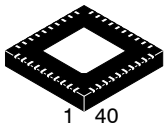

QFN40
MN SUFFIX
CASE 485AU

Introduction

NCN5121 is a receiver−transmitter IC suitable for use in KNX twisted pair networks (KNX TP1−256). It supports the connection of actuators, sensors, microcontrollers, switches or other applications in a building network.

NCN5121 handles the transmission and reception of data on the bus. It generates from the unregulated bus voltage stabilized voltages for its own power needs as well as to power external devices, for example, a microcontroller.

NCN5121 assures safe coupling to and decoupling from the bus. Bus monitoring warns the external microcontroller in case of loss of power so that critical data can be stored in time.

Key Features

- 9600 baud KNX Communication Speed
- Supervision of KNX Bus Voltage and Current
- Supports Bus Current Consumption up to 24 mA
- High Efficient DC−DC Converters
  - 3.3 V Fixed
  - 1.2 V to 21 V Selectable
- Control and Monitoring of Power Regulators
- Linear 20 V Regulator
- Buffering of Sent Data Frames (Extended Frames Supported)
- Selectable UART or SPI Interface to Host Controller
- Selectable UART and SPI baud Rate to Host Controller
- Optional CRC on UART to the Host
- Optional Received Frame−end with MARKER Service
- Optional Direct Analog Signaling to Host
- Operates with Industry Standard Low Cost 16 MHz Quartz
- Generates Clock of 8 or 16 MHz for External Devices
- Auto Acknowledge (optional)
- Auto Polling (optional)
- Temperature Monitoring
- Extended Operating Temperature Range −40°C to +105°C
- These Devices are Pb−Free and are RoHS Compliant

MARKING DIAGRAM

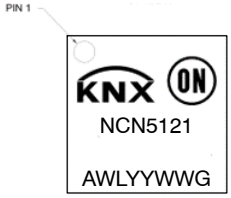

A = Assembly Location
WL = Wafer Lot
YY = Year
WW = Work Week
G = Pb−Free Package

ORDERING INFORMATION

See detailed ordering and shipping information in the package dimensions section on page 61 of this data sheet.

© Semiconductor Components Industries, LLC, 2015

BLOCK DIAGRAM

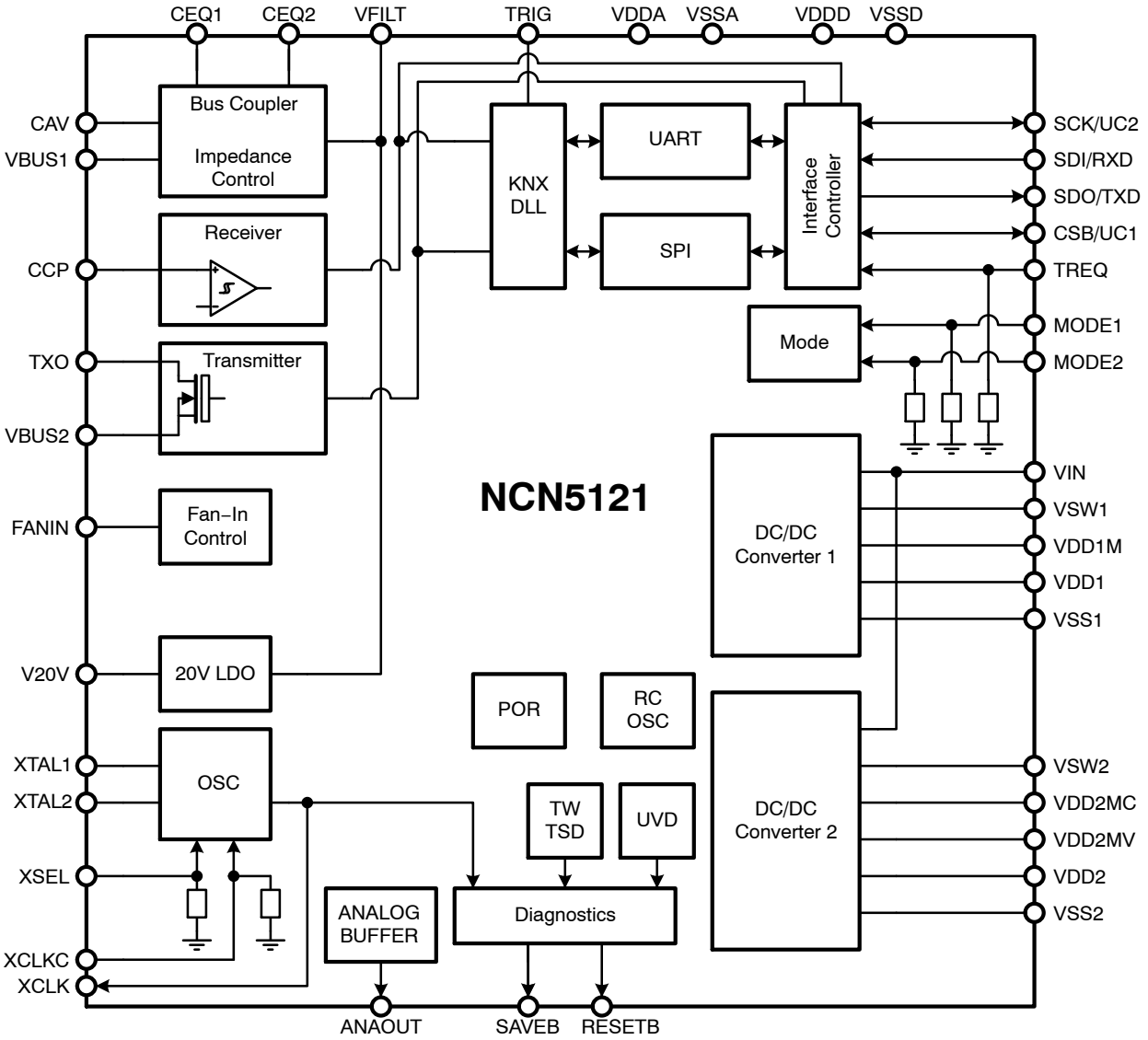

Figure 1. Block Diagram NCN5121

PIN OUT

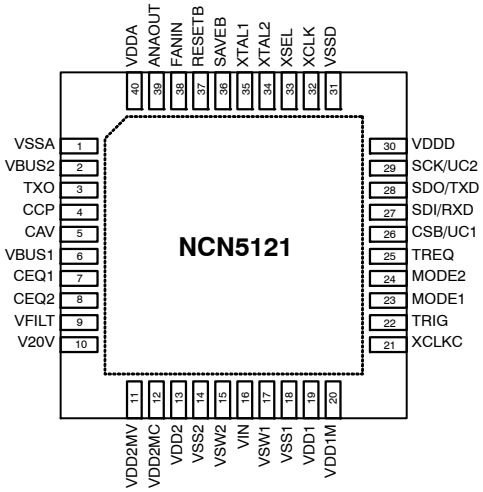

Figure 2. Pin Out NCN5121 (Top View)

PIN DESCRIPTION

Table 1. PIN LIST AND DESCRIPTION

Name	Pin	Description	Type	Equivalent Schematic
VSSA	1	Analog Supply Voltage Ground	Supply	
VBUS2	2	Ground for KNX Transmitter	Supply	
TX0	3	KNX Transmitter Output	Analog Output	Type 1
CCP	4	AC coupling external capacitor connection	Analog I/O	Type 2
CAV	5	Capacitor connection to average bus DC voltage	Analog I/O	Type 3
VBUS1	6	KNX power supply input	Supply	Type 5
CEQ1	7	Capacitor connection 1 for defining equalization pulse	Analog I/O	Type 4
CEQ2	8	Capacitor connection 2 for defining equalization pulse	Analog I/O	Type 4
VFILT	9	Filtered bus voltage	Supply	Type 5
V20V	10	20V supply output	Supply	Type 5
VDD2MV	11	Voltage monitor of Voltage Regulator 2	Analog Input	Type 8
VDD2MC	12	Current monitor input 1 of Voltage Regulator 2	Analog Input	Type 9
VDD2	13	Current monitor input 2 of Voltage Regulator 2	Analog Input	Type 8
VSS2	14	Voltage Regulator 2 Ground	Supply	
VSW2	15	Switch output of Voltage Regulator 2	Analog Output	Type 6
VIN	16	Voltage Regulator 1 and 2 Power Supply Input	Supply	Type 5
VSW1	17	Switch output of Voltage Regulator 1	Analog Output	Type 6
VSS1	18	Voltage Regulator 1 Ground	Supply	
VDD1	19	Current Input 2 and Voltage Monitor Input of Voltage Regulator 1	Analog Input	Type 8
VDD1M	20	Current Monitor Input 1 of Voltage Monitor 1	Analog Input	Type 9
XCLKC	21	Clock Frequency Configure	Digital Input	Type 12
TRIG	22	Transmission Trigger Output	Digital Output	Type 13
MODE1	23	Mode Selection Input 1	Digital Input	Type 12
MODE2	24	Mode Selection Input 2	Digital Input	Type 12
TREQ	25	Transmit Request Input	Digital Input	Type 12
CSB/UC1	26	Chip Select Output (SPI) or Configuration Input (UART) or 20 V LDO Disable (Analog Mode)	Digital Output or Digital Input	Type 13 or 14
SDI/RXD	27	Serial Data Input (SPI) or Receive Input (UART)	Digital Input	Type 14
SDO/TXD	28	Serial Data Output (SPI) or Transmit Output (UART)	Digital Output	Type 13
SCK/UC2	29	Serial Clock Output (SPI) or Configuration Input (UART) or Voltage Regulator 2 Disable (Analog Mode)	Digital Output or Digital Input	Type 13 or 14
VDDD	30	Digital Supply Voltage Input	Supply	Type 7
VSSD	31	Digital Supply Voltage Ground	Supply	
XCLK	32	Oscillator Clock Output	Digital Output	Type 13
XSEL	33	Clock Selection (Quartz or Digital Clock)	Digital Input	Type 12
XTAL2	34	Clock Generator Output (Quartz) or Input (Digital Clock)	Analog Output or Digital Input	Type 10 or 14
XTAL1	35	Clock Generator Input (Quartz)	Analog Input	Type 10
SAVEB	36	Save Signal (open drain with pull−up)	Digital Output	Type 15
RESETB	37	Reset Signal (open drain with pull−up)	Digital Output	Type 15
FANIN	38	Fan−In Input	Digital Input	Type 11
ANAOUT	39	Analog Signal Output	Analog Output	Type 16
VDDA	40	Analog Supply Voltage Input	Supply	Type 7

NOTE: Type of CSB/UC1 and SCK/UC2 is depending on status MODE1 − MODE2 pin
Type of XTAL1 and XTAL2 pin is depending on status XSEL pin.

EQUIVALENT SCHEMATICS

Following figure gives the equivalent schematics of the user relevant inputs and outputs. The diagrams are simplified representations of the circuits used.

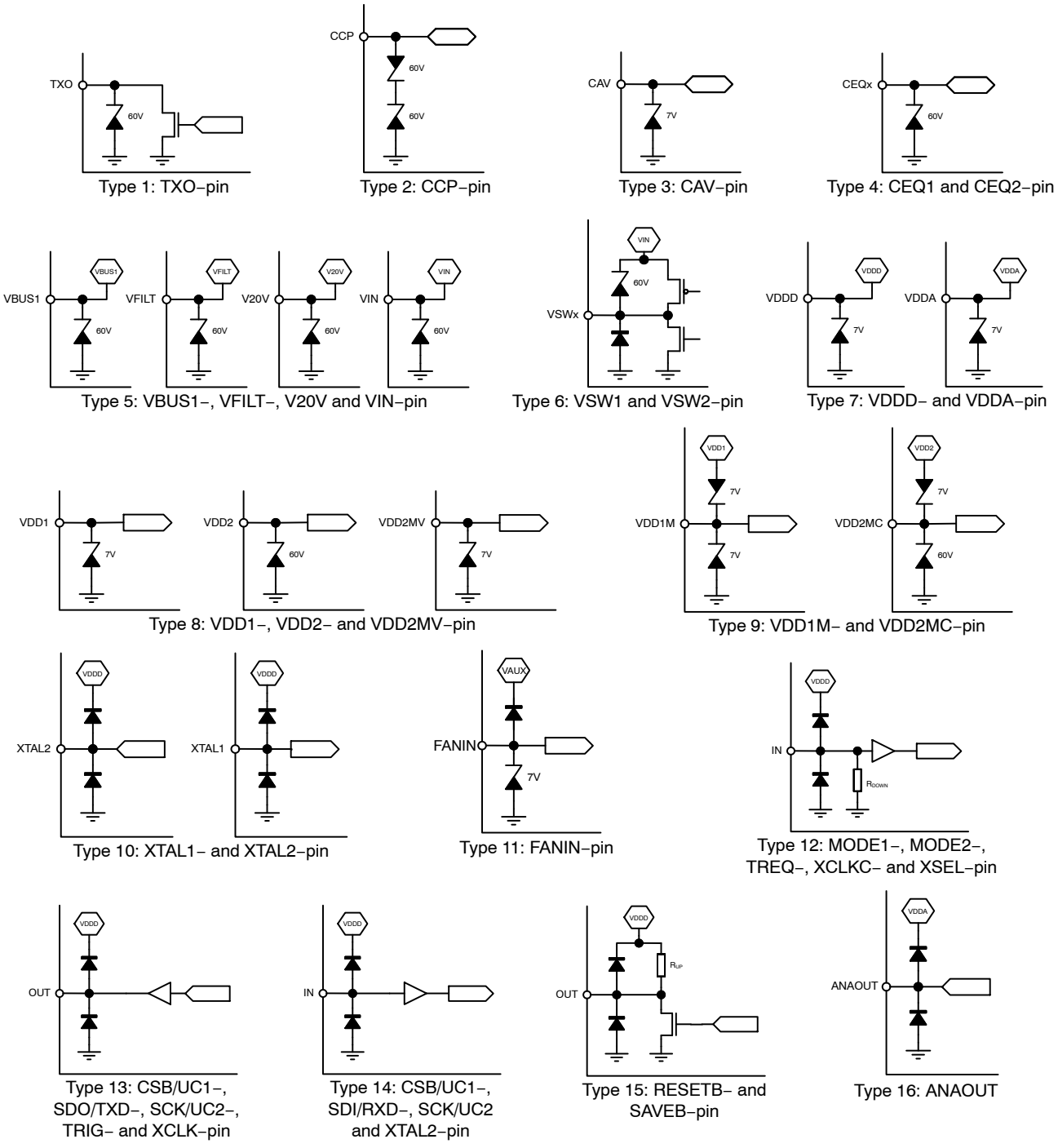

NOTE: Type of CSB/UC1 and SCK/UC2 is depending on status MODE1 − MODE2 pin
Type of XTAL1 and XTAL2 pin is depending on status XSEL pin.

Figure 3. In− and Output Equivalent Diagrams

ELECTRICAL SPECIFICATION

Table 2. ABSOLUTE MAXIMUM RATINGS (Notes 1 and 2)

Symbol	Parameter	Min	Max	Unit
V_{TXO}	KNX Transmitter Output Voltage	−0.3	+45	V
I_{TXO}	KNX Transmitter Output Current (Note 3)	−	250	mA
V_{CCP}	Voltage on CCP−pin	−10.5	+14.5	V
V_{CAV}	Voltage on CAV−pin	−0.3	+3.6	V
V_{BUS1}	Voltage on VBUS1−pin	−0.3	+45	V
V_{ANAOUT}	Voltage on ANAOUT pin	−0.3	+3.6	V
I_{BUS1}	Current Consumption VBUS1−pin	0	120	mA
V_{CEQ}	Voltage on pins CEQ1 and CEQ2	−0.3	+45	V
V_{FILT}	Voltage on VFILT−pin	−0.3	+45	V
V_{20V}	Voltage on V20V−pin	−0.3	+25	V
V_{DD2MV}	Voltage on VDD2MV−pin	−0.3	+3.6	V
V_{DD2MC}	Voltage on VDD2MC−pin	−0.3	+45	V
V_{DD2}	Voltage on VDD2−pin	−0.3	+45	V
V_{SW}	Voltage on VSW1− and VSW2−pin	−0.3	+45	V
V_{IN}	Voltage on VIN−pin	−0.3	+45	V
V_{DD1}	Voltage on VDD1−pin	−0.3	+3.6	V
V_{DD1M}	Voltage on VDD1M−pin	−0.3	+3.6	V
V_{DIG}	Voltage on pins MODE1, MODE2, TREQ, CSB/UC1, SDI/TXD, SDO/RXD, SCK/ UC2, XCLK, XSEL, SAVEB, RESETB, XCLKC, TRIG, and FANIN	−0.3	+3.6	V
V_{DD}	Voltage on VDDD− and VDDA−pin	−0.3	+3.6	V
V_{XTAL}	Voltage on XTAL1− and XTAL2−pin	−0.3	+3.6	V
T_{ST}	Storage temperature	−55	+150	°C
T_J	Junction Temperature (Note 4)	−40	+155	°C
V_{HBM}	Human Body Model electronic discharge immunity (Note 5)	−2	+2	kV

Stresses exceeding those listed in the Maximum Ratings table may damage the device. If any of these limits are exceeded, device functionality should not be assumed, damage may occur and reliability may be affected.

1. Convention: currents flowing in the circuit are defined as positive.
2. VBUS2, VSS1, VSS2, VSSA and VSSD form the common ground. They are hard connected to the PCB ground layer.
3. Room temperature, 27 Ω shunt resistor for transmitter, 250 mA over temperature range.
4. Normal performance within the limitations is guaranteed up to the Thermal Warning level. Between Thermal Warning and Thermal Shutdown temporary loss of function or degradation of performance (which ceases after the disturbance ceases) is possible.
5. According to JEDEC JESD22−A114.

Recommend Operation Conditions

Operating ranges define the limits for functional operation and parametric characteristics of the device. Note that the functionality of the chip outside these operating ranges is not guaranteed. Operating outside the recommended operating ranges for extended periods of time may affect device reliability.

Table 3. OPERATING RANGES

Symbol	Parameter	Min	Max	Unit
V_{BUS1}	VBUS1 Voltage (Note 6)	+20	+33	V
V_{DD}	Digital and Analog Supply Voltage (VDDD− and VDDA−pin)	+3.13	+3.47	V
V_{IN}	Input Voltage DC−DC Converter 1 and 2	(Note 7)	+33	V
V_{CCP}	Input Voltage at CCP−pin	−10.5	+14.5	V
V_{CAV}	Input Voltage at CAV−pin	0	+3.3	V
V_{DD1}	Input Voltage on VDD1−pin	+3.13	+3.47	V
V_{DD1M}	Input Voltage on VDD1M−pin	+3.13	+3.57	V
V_{DD2}	Input Voltage on VDD2−pin	+1.2	+21	V
V_{DD2MC}	Input Voltage on VDD2MC−pin	+1.2	+21.1	V
V_{DD2MV}	Input Voltage on VDD2MV−pin	+1.2	VDD	V
V_{DIG}	Input Voltage on pins MODE1, MODE2, TREQ, CSB/UC1, SDI/RXD, SCK/UC2, XCLKC, and XSEL	0	VDD	V
V_{FANIN}	Input Voltage on FANIN−pin	0	3.6	V
f_{clk}	Clock Frequency External Quartz	16		MHz
T_A	Ambient Temperature	−40	+105	°C
T_J	Junction Temperature (Note 8)	−40	+125	°C

Functional operation above the stresses listed in the Recommended Operating Ranges is not implied. Extended exposure to stresses beyond the Recommended Operating Ranges limits may affect device reliability.

6. Voltage indicates DC value. With equalization pulse bus voltage must be between 11 V and 45 V.
7. Minimum operating voltage on VIN−pin should be at least 1 V larger than the highest value of VDD1 and VDD2.
8. Higher junction temperature can result in reduced lifetime.

Table 4. DC PARAMETERS The DC parameters are given for a device operating within the Recommended Operating Conditions unless otherwise specified. Convention: currents flowing in the circuit are defined as positive.

Symbol	Pin(s)	Parameter	Remark/Test Conditions	Min	Typ	Max	Unit
POWER SUPPLY							
V_{BUS1}	VBUS1	Bus DC voltage	Excluding active and equalization pulse	20	–	33	V
I_{BUS1_Int}		Bus Current Consumption	VBUS = 30 V, IBUS = 10 mA, DC2, V20V disabled, no crystal or clock	–	2.00	2.70	mA
		Bus Current Consumption	VBUS = 20 V, IBUS = 20 mA	–	3.20	4.10	
V_{BUSH}		Undervoltage release level	V_{BUS1} rising, see Figure 4	17.1	18.0	18.9	V
V_{BUSL}		Undervoltage trigger level	V_{BUS1} falling, see Figure 4	15.9	16.8	17.7	V
V_{BUS_Hyst}		Undervoltage hysteresis		0.6	–	–	V
V_{DDD}	VDDD	Digital Power Supply		3.13	3.3	3.47	V
V_{DDA}	VDDA	Analog Power Supply		3.13	3.3	3.47	V
V_{AUX}		Auxiliary Supply	Internal supply, for info only	2.8	3.3	3.6	V
KNX BUS COUPLER							
$\Delta I_{coupler}/\Delta t$	VBUS1	Bus Coupler Current Slope Limitation	FANIN floating, $V_{FILT} > V_{FILTH}$	–	0.40	0.50	A/s
			FANIN = 0, $V_{FILT} > V_{FILTH}$	–	0.80	1.00	A/s
$I_{coupler_lim, startup}$	VBUS1	Bus Coupler Startup Current Limitation	FANIN floating, $V_{FILT} > V_{FILTH}$	20.0	25.0	30.0	mA
			FANIN = 0, $V_{FILT} > V_{FILTH}$	40.0	50.0	60.0	mA
$I_{coupler_lim}$	VBUS1	Bus Coupler Current Limitation	FANIN floating, $V_{FILT} > V_{FILTH}$	10.6	11.4	12.0	mA
			FANIN = 0, $V_{FILT} > V_{FILTH}$	20.5	22.3	24.0	mA
$V_{coupler_drop}$	VBUS1, VFILT	Coupler Voltage Drop ($V_{coupler_drop} = V_{BUS1} - V_{FILT}$)	I_{BUS1} = 10 mA	–	1.72	2.32	V
			I_{BUS1} = 20 mA	–	2.34	2.80	V
V_{FILTH}	VFILT	Undervoltage release level	V_{FILT} rising, see Figure 5	10.1	10.6	11.2	V
V_{FILTL}		Undervoltage trigger level	V_{FILT} falling, see Figure 5	8.4	8.9	9.4	V
FIXED DC−DC CONVERTER							
V_{IN}	VIN	Input Voltage		4.47	–	33	V
V_{DD1}	VDD1	Output Voltage		3.13	3.3	3.47	V
V_{DD1_rip}		Output Voltage Ripple	V_{IN} = 25 V, I_{DD1} = 40 mA, L1 = 220 μH	–	40	–	mV
I_{DD1_lim}		Overcurrent Threshold	R_2 = 1 Ω, see Figure 13	−100	–	−200	mA
η_{VDD1}		Power Efficiency (DC Converter Only)	V_{in} = 25 V, I_{DD1} = 35 mA, L_1 = 220 μH (1.26 Ω ESR), see Figure 12		90	–	%
$R_{DS(on)_p1}$		$R_{DS(on)}$ of power switch	See Figure 18	–	–	9	Ω
$R_{DS(on)_n1}$		$R_{DS(on)}$ of flyback switch	See Figure 18	–	–	4	Ω
V_{DD1M}	VDD1M	Input voltage VDD1M−pin		–	–	3.57	V

Table 4. DC PARAMETERS The DC parameters are given for a device operating within the Recommended Operating Conditions unless otherwise specified. Convention: currents flowing in the circuit are defined as positive.

Symbol	Pin(s)	Parameter	Remark/Test Conditions	Min	Typ	Max	Unit
ADJUSTABLE DC−DC CONVERTER							
V_{IN}	VIN	Input Voltage		V_{DD2} + 1	–	33	V
V_{DD2}	VDD2	Output Voltage	$V_{IN} \geq V_{DD2}$	1.2	–	21	V
V_{DD2H}		Undervoltage release level	V_{DD2} rising, see Figure 6	–	0.9 x V_{DD2}	–	V
V_{DD2L}		Undervoltage trigger level	V_{DD2} falling, see Figure 6	–	0.8 x V_{DD2}	–	V
V_{DD2_rip}		Output Voltage Ripple	V_{IN} = 25 V, V_{DD2} = 3.3 V, I_{DD2} = 40 mA, L2 = 220 μH	–	40	–	mV
I_{DD2_lim}		Overcurrent Threshold	R_3 = 1 Ω, see Figure 13	−100	–	−250	mA
η_{VDD2}		Power Efficiency (DC Converter Only)	V_{in} = 25 V, V_{DD2} = 3.3 V, I_{DD2} = 35 mA, L_2 = 220 μH (1.26 Ω ESR), see Figure 13	–	90	–	%
$R_{DS(on)_p2}$		$R_{DS(on)}$ of power switch	See Figure 18	–	–	8	Ω
$R_{DS(on)_n2}$		$R_{DS(on)}$ of flyback switch	See Figure 18	–	–	4	Ω
V_{DD2M}	VDD2MC	Input voltage VDD2MC−pin		–	–	21.1	V
R_{VDD2M}	VDD2MV	Input Resistance VDD2MV−pin		1	–	–	MΩ
$I_{leak,vsw2}$		Half−bridge leakage		–	–	20	μA
V20V REGULATOR							
V_{20V}	V20V	V20V Output Voltage	$I_{20V} < I_{20V_lim}$, $V_{FILT} \geq 21$ V	18	20	22	V
$\Delta I_{20V,\ STEP}$		V20V Output Current Limitation Step	FANIN floating	–	1.25	–	mA
			FANIN = 0	–	2.50	–	mA
I_{20V_lim}		V20V Output Current Limitation (for V20VCLIMIT[2:0] = 100)	FANIN floating	6	7.5	9	mA
			FANIN = 0	12	15	18	mA
V_{20VH}		V20V Undervoltage release level	V_{20V} rising, see Figure 7	14.2	15.0	15.8	V
V_{20VL}		V20V Undervoltage trigger level	V_{20V} falling, see Figure 7	13.2	14.0	14.8	V
V_{20V_hyst}		V20V Undervoltage hysteresis	$V_{20V_hyst} = V_{20VH} - V_{20VL}$	–	1.0	–	V
XTAL OSCILLATOR							
V_{XTAL}	XTAL1, XTAL2	Voltage on XTAL−pin		–	–	V_{DDD}	V
FAN−IN CONTROL							
$I_{pu,fanin}$	FANIN	Pull−Up Current FANIN−pin	FANIN shorted to GND, Pull−up connected to V_{AUX}	10	20	40	μA

Table 4. DC PARAMETERS The DC parameters are given for a device operating within the Recommended Operating Conditions unless otherwise specified. Convention: currents flowing in the circuit are defined as positive.

Symbol	Pin(s)	Parameter	Remark/Test Conditions	Min	Typ	Max	Unit
DIGITAL INPUTS							
V_{IL}	SCK/UC2, SDI/RXD, CSB/UC1, TREQ, MODE1, MODE2, XSEL, XCLKC, XTAL2	Logic Low Threshold		0	–	0.7	V
V_{IH}		Logic High Threshold		2.65	–	V_{DDD}	V
R_{DOWN}		Internal Pull−Down Resistor	SCK/UC2−, SDI/RXD− and CSB/UC1 pin excluded. Only valid in Normal State.	5	10	28	kΩ
DIGITAL OUTPUTS							
V_{OL}	SCK/UC2, SDO/TXD, CSB/UC1, XCLK, TRIG	Logic low output level		0	–	0.4	V
V_{OH}		Logic high output level		V_{DDD} − 0.45	–	V_{DDD}	V
I_L	SCK/UC2, XCLK, TRIG	Load Current		–	–	8	mA
	SDO/TXD, CSB/UC1			–	–	4	mA
V_{OL}	SAVEB, RESETB	Logic low level open drain	I_{OL} = 4 mA	–	–	0.4	V
R_{up}		Internal Pull−up Resistor		20	40	80	kΩ
ANALOG OUTPUT							
PV_{BUS}	ANAOUT	Analog output division ratio for V_{BUS}		0.067	0.071	0.075	–
PV_{FILT}		Analog output division ratio for V_{FILT}		0.071	0.075	0.079	–
PV_{20V}		Analog output division ratio for V_{20V}		0.086	0.091	0.096	–
PV_{DDA}		Analog output division ratio for V_{DDA}		0.438	0.462	0.485	–
PV_{DD2}		Analog output division ratio for V_{DD2MV}		0.950	1.000	1.050	–
PI_{BUS}		Analog output conversion ratio for I_{BUS}		14.0	20.9	28.8	V/A
PT_J		Analog output conversion ratio for $T_{junction}$		–	−4	–	mV/K
VTJ_{OFF}		Analog output offset for $T_{junction}$ at 300K		–	1.309	–	V
V_{OFF}		Analog output offset voltage		−12	–	12	mV
$t_{SW,ANA}$		Time between writing Analog Control Register 1 and stable ANAOUT voltage (<1 nF capacitive load)		–	33	–	μs
TEMPERATURE MONITOR							
T_{TW}		Thermal Warning	Rising temperature See Figure 8	105	115	125	°C
T_{TSD}		Thermal shutdown	Rising temperature See Figure 8	130	140	150	°C
T_{Hyst}		Thermal Hysteresis	See Figure 8	5	11	15	°C
ΔT		Delta T_{TSD} and T_{TW}	See Figure 8	–	21.7	–	°C
PACKAGE THERMAL RESISTANCE VALUE							
$R_{\theta,ja}$		Thermal Resistance Junction−to−Ambient	Simulated Conform JEDEC JESD−51, (2S2P)	–	30	–	K/W
			Simulated Conform JEDEC JESD−51, (1S0P)	–	60	–	K/W
$R_{\theta,jp}$		Thermal Resistance Junction−to−Exposed Pad		–	0.95	–	K/W

Table 5. AC PARAMETERS The AC parameters are given for a device operating within the Recommended Operating Conditions unless otherwise specified.

Symbol	Pin(s)	Parameter	Remark/Test Conditions	Min	Typ	Max	Unit
POWER SUPPLY							
t_{BUS_FILTER}	VBUS1	VBUS1 filter time	See Figure 4	–	2	–	ms
FIXED DC−DC CONVERTER							
t_{VSW1_rise}	VSW1	Rising slope at VSW1−pin		–	0.45	–	V/ns
t_{VSW1_fall}		Falling slope at VSW1−pin		–	0.6	–	V/ns
ADJUSTABLE DC−DC CONVERTER							
t_{VSW2_rise}	VSW2	Rising slope at VSW2−pin		–	0.45	–	V/ns
t_{VSW2_fall}		Falling slope at VSW2−pin		–	0.6	–	V/ns
XTAL OSCILLATOR							
f_{XTAL}	XTAL1, XTAL2	XTAL Oscillator Frequency		–	16	–	MHz
WATCHDOG							
t_{WDPR}		Prohibited Watchdog Acknowledge Delay	See Watchdog, p23	2	–	33	ms
t_{WDTO}		Watchdog Timeout Interval	Selectable over UART or SPI	33	–	524	ms
t_{WDTO_acc}		Watchdog Timeout Interval Accuracy		=Xtal accuracy			
t_{WDRD}		Watchdog Reset Delay		–	0	–	ns
t_{RESET}		Reset Duration		–	8	–	µs
MASTER SERIAL PERIPHERAL INTERFACE (MASTER SPI)							
t_{sck}	SCK	SPI Clock period	SPI Baudrate depending on configuration input bits (see Interface Mode, p28). Tolerance is equal to Xtal oscillator tolerance. See also Figure 10	–	2	–	µs
				–	8	–	µs
t_{SCK_HIGH}		SPI Clock high time		–	t_{SCK} / 2	–	
t_{SCK_LOW}		SPI Clock low time		–	t_{SCK} / 2	–	
t_{SDI_SET}	SDI	SPI Data Input setup time		125	–	–	ns
t_{SDI_HOLD}		SPI Data Input hold time		125	–	–	ns
t_{SDO_VALID}	SDO	SPI Data Output valid time	C_L = 20 pF, See Figure 10	–	–	100	ns
t_{CS_HIGH}	CSB	SPI Chip Select high time	See Figure 10	0.5 x t_{SCK}	–	–	
t_{CS_SET}		SPI Chip Select setup time		0.5 x t_{SCK}	–	–	
t_{CS_HOLD}		SPI Chip Select hold time		0.5 x t_{SCK}	–	–	
t_{TREQ_LOW}	TREQ	TREQ low time	See Figure 11	125	–	–	ns
t_{TREQ_HIGH}		TREQ high time		125	–	–	ns
t_{TREQ_SET}		TREQ setup time		125	–	–	ns
t_{TREQ_HOLD}		TREQ hold time		125	–	–	ns
UNIVERSAL ASYNCHRONOUS RECEIVER/TRANSMITTER (UART)							
f_{UART}	TXD, RXD	UART Interface Baudrate	Baudrate depending on configuration input pins (see *Interface Mode*, p28). Tolerance is equal to tolerance of Xtal oscillator tolerance.	–	19200	–	Baud
				–	38400	–	Baud

Product parametric performance is indicated in the Electrical Characteristics for the listed test conditions, unless otherwise noted. Product performance may not be indicated by the Electrical Characteristics if operated under different conditions.

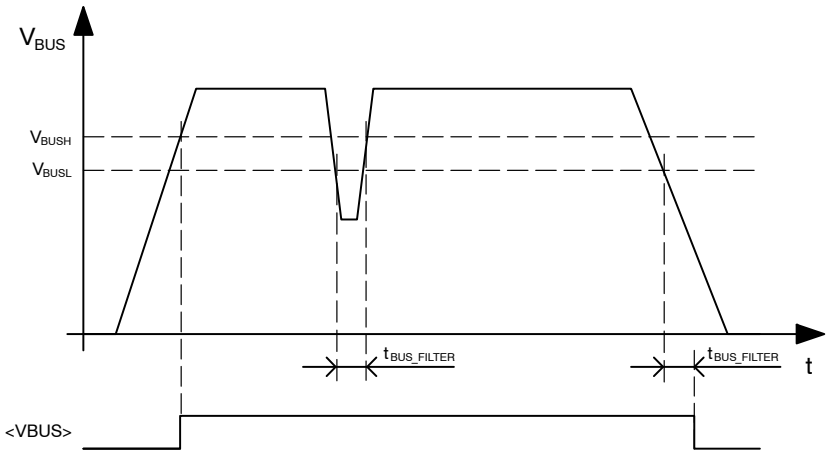

Comments: <VBUS> is an internal signal which can be verified with the Internal State Service

Figure 4. Bus Voltage Undervoltage Threshold

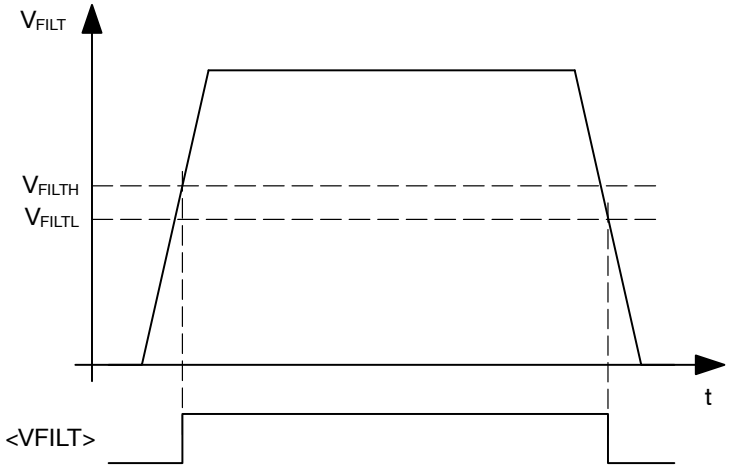

Comments: <VFILT> is an internal signal which can be verified with the Internal State Service

Figure 5. VFILT Undervoltage Threshold

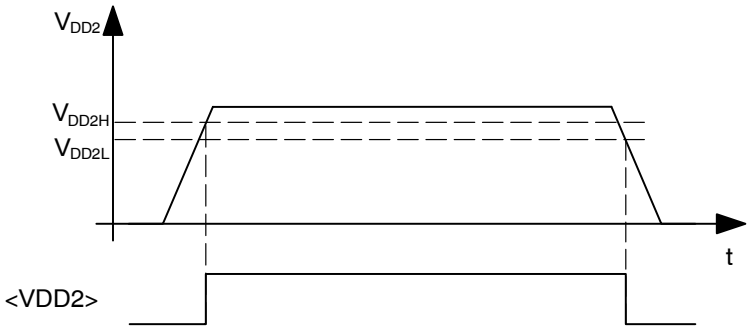

Comments: <VDD2> is an internal signal which can be verified with the Internal State Service

Figure 6. VDD2 Undervoltage Thresholds

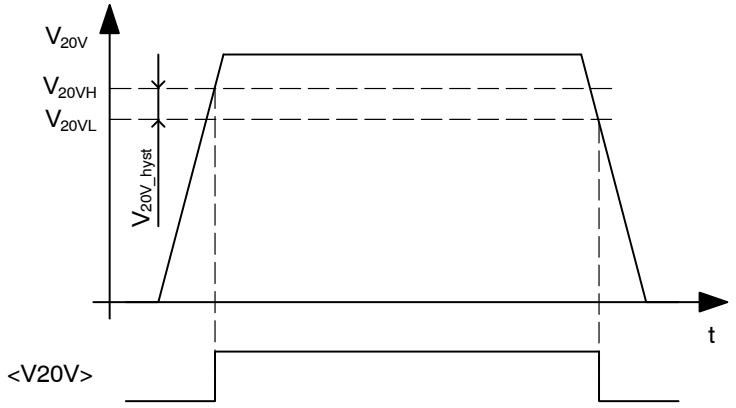

Comments: <V20V> is an internal signal which can be verified with the Internal State Service

Figure 7. V20V Undervoltage Threshold Levels

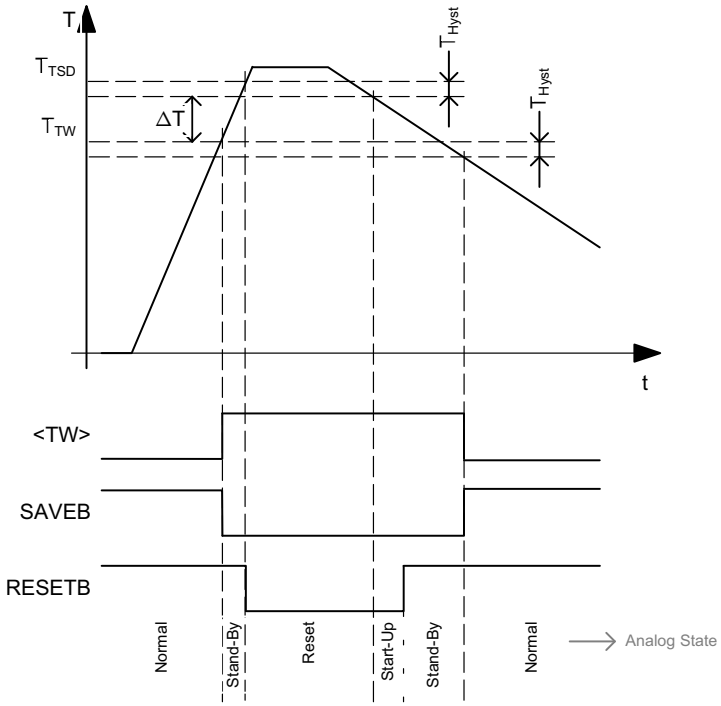

Remarks:
- <TW> is an internal signal which can be verified with the System State Service.
- No SPI/UART communication possible when RESETB is low!
- It's assumed all voltage supplies are within their operating condition.

Figure 8. Temperature Monitoring Levels

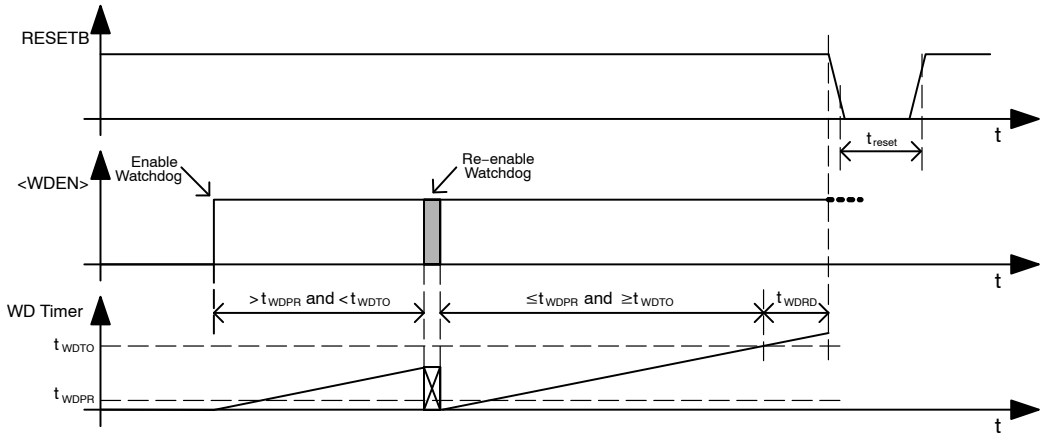

Comments: – WD Timer is an internal timer
– t_{WDTO} = <WDT[3:0]>
– <WDEN> and <WDT[3:0]> are Watchdog Register bits

Figure 9. Watchdog Timing Diagram

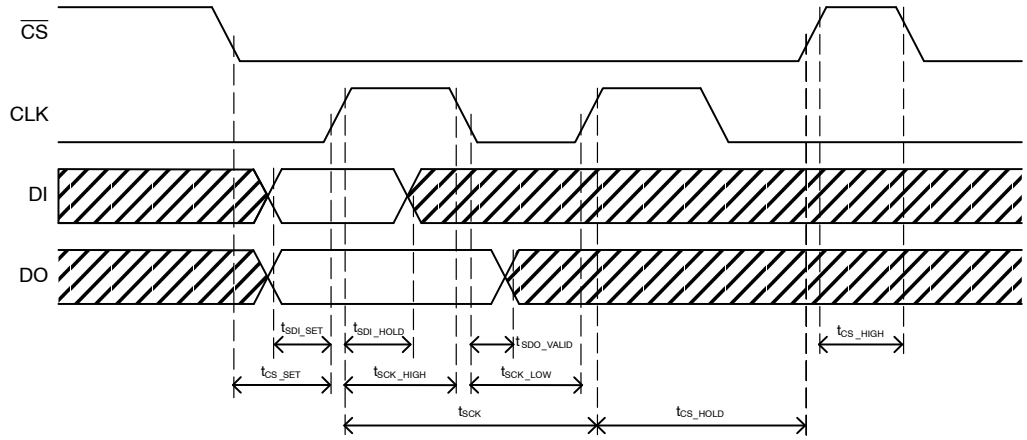

Figure 10. SPI Bus Timing Diagram

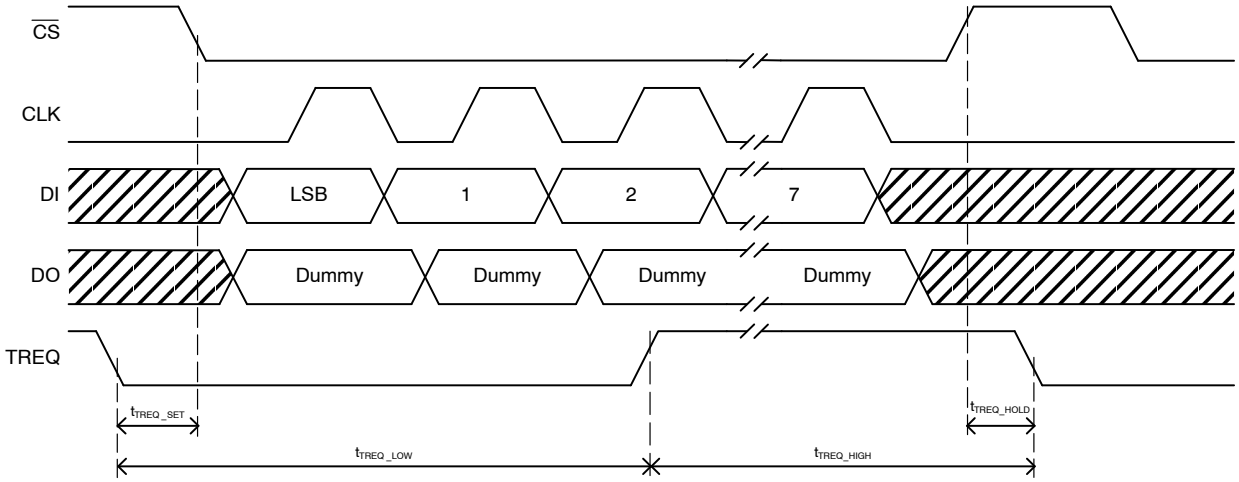

Figure 11. TREQ Timing Diagram

TYPICAL APPLICATION SCHEMATICS

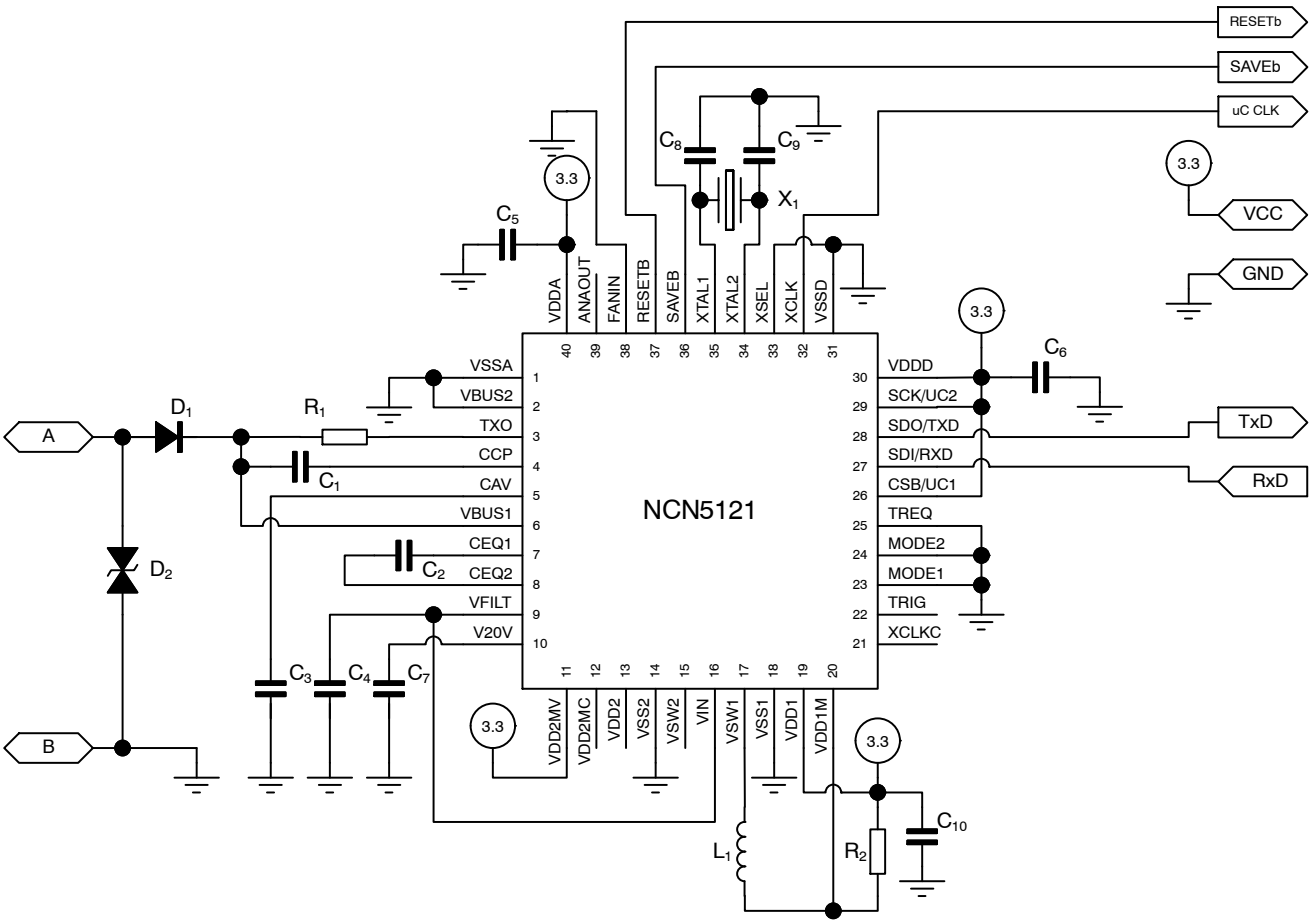

Figure 12. Typical Application Schematic, 8−bit UART Mode (38400 bps), Single Supply, 20 mA Bus Current Limit and 1 mA/ms Bus Current Slopes, 8 MHz Microcontroller Clock Signal

TYPICAL APPLICATION SCHEMATICS

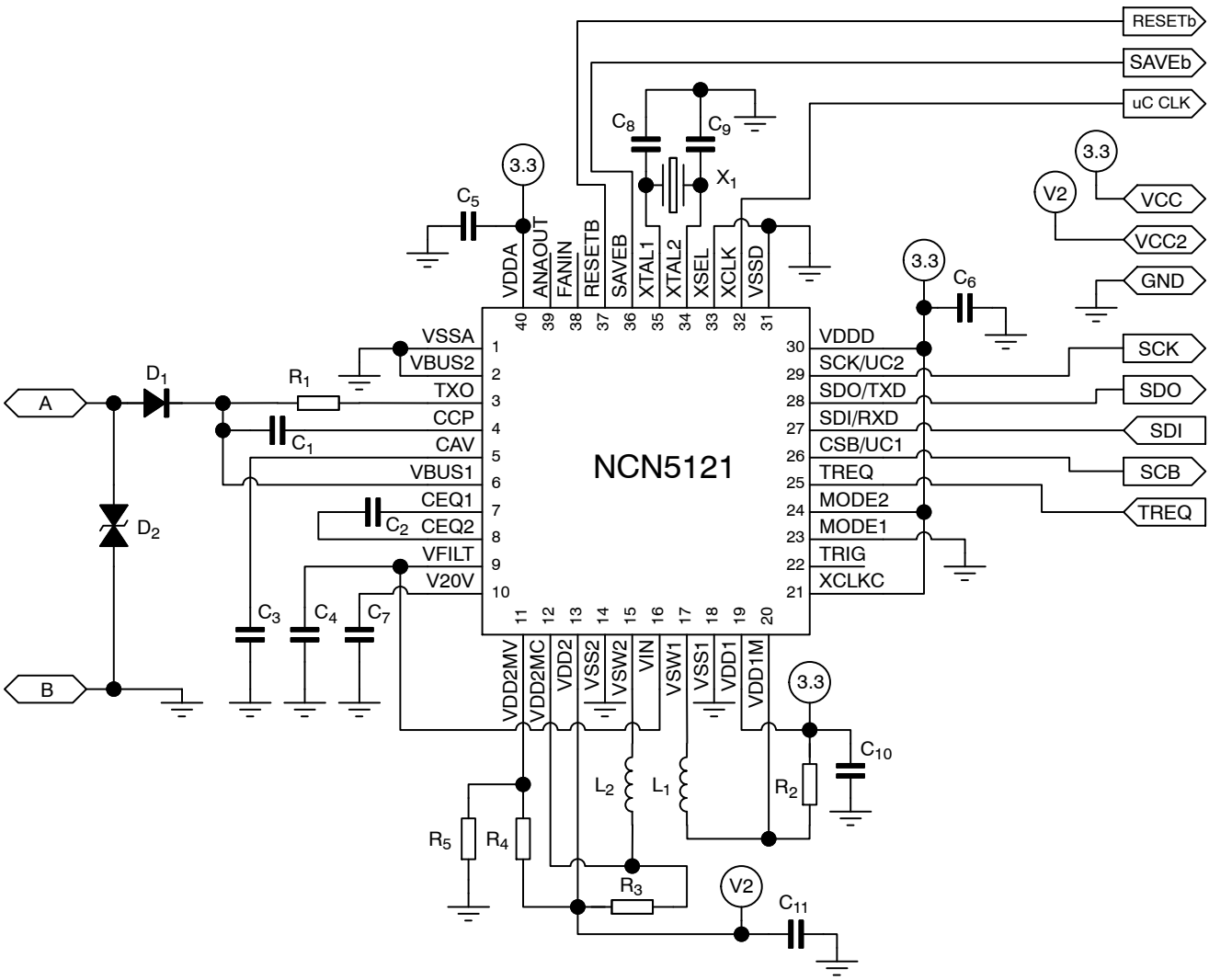

Figure 13. Typical Application Schematic, SPI (500 kbps), Dual Supply, 10 mA Bus Current Limit and 0.5 mA/ms Bus Current Slopes, 16 MHz Clock for Microcontroller

TYPICAL APPLICATION SCHEMATICS

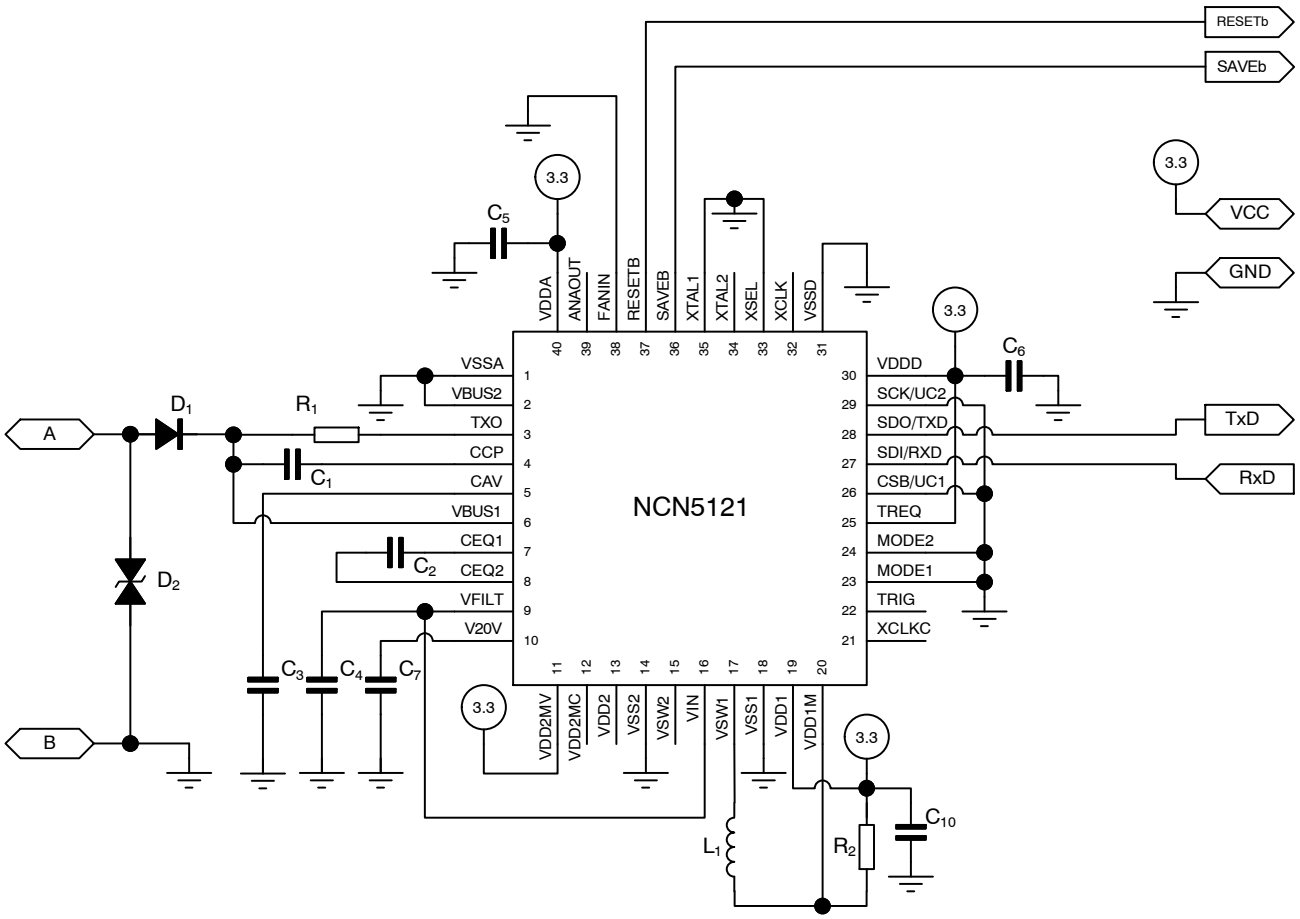

Figure 14. Typical Application Schematic, Analog Mode, Single Supply, 20 mA Bus Current Limit and 1.0 mA/ms Bus Current Slopes, 8 MHz Clock Signal for Microcontroller

Table 6. EXTERNAL COMPONENTS LIST AND DESCRIPTION

Comp.	Function	Min	Typ	Max	Unit	Remarks	Notes
C_1	AC coupling capacitor	42.3	47	51.7	nF	50 V, Ceramic	9
C_2	Equalization capacitor	198	220	242	nF	50 V, Ceramic	9
C_3	Capacitor to average bus DC voltage	80	100	120	nF	50 V, Ceramic	9
C_4	Storage and filter capacitor VFILT	80	100	4000	μF	35 V	9, 16
C_5	VDDA HF rejection capacitor	80	100	–	nF	6.3 V, Ceramic	
C_6	VDDD HF rejection capacitor	80	100	–	nF	6.3 V, Ceramic	
C_7	Load Capacitor V20V	–	1	–	μF	35 V, Ceramic, ESR < 2 Ω	14, 15, 16
C_8, C_9	Parallel capacitor X−tal	8	10	12	pF	6.3 V, Ceramic	10
C_{10}	Load capacitor VDD1	8	10		μF	6.3 V, Ceramic, ESR < 0.1 Ω	
C_{11}	Load capacitor VDD2	8	10		μF	Ceramic, ESR < 0.1 Ω	11
R_1	Shunt resistor for transmitting	24.3	27	29.7	Ω	1 W	9
R_2	DC1 sensing resistor	0.47	1	10	Ω	1/16 W	
R_3	DC2 sensing resistor	0.47	1	10	Ω	1/16 W	
R_4	Voltage divider to specify VDD2	0	–		Ω	1/16 W, see p19 for calculating the exact value	
R_5		0	–	1	MΩ		
L_1, L_2	DC1/DC2 inductor	–	220	–	μH		
D_1	Reverse polarity protection diode	SS16					12
D_2	Voltage suppressor	1SMA40CA					
X_1	Crystal oscillator	FA-238					13

9. Component must be between minimum and maximum value to fulfill the KNX requirement.
10. Actual capacitor value depends on X1. If a crystal oscillator is chosen, the capacitors need to be chosen in such a way that the frequency equals 16 MHz. Capacitors are not required if external clock signal is supplied.
11. Voltage of capacitor depends on VDD2 value defined by R4 and R5. See p16 for more details on defining VDD2 voltage value.
12. Reverse polarity diode is mandatory to fulfill the KNX requirement.
13. A clock signal of 16 MHz (50 ppm or less) is mandatory to fulfill the KNX requirements. Or a crystal oscillator of 16 MHz, 50 ppm is used (C8 and C9 need to be of the correct value based on the crystal datasheet), or an external 16 MHz clock is used.
14. It's allowed to short this pin to VFILT-pin
15. High capacitor value might affect the start up time
16. Total charge of C4 and C7 may not be higher than 121 mC to fulfill the KNX requirement.

ANALOG FUNCTIONAL DESCRIPTION

Because NCN5121 follows the KNX standard only a brief description of the KNX related blocks is given in this datasheet. Detailed information on the KNX Bus can be found on the KNX website (www.knx.org) and in the KNX standards.

KNX Bus Interfacing

Each bit period is 104 μs. Logic 1 is simply the DC level of the bus voltage which is between 20 V and 33 V. Logic 0 is encoded as a drop in the bus voltage with respect to the DC level. Logic 0 is known as the active pulse.

The active pulse is produced by the transmitter and is ideally rectangular. It has a duration of 35 μs and a depth between 6 and 9 V (V_{act}). Each active pulse is followed by an equalization pulse with a duration of 69 μs. The latter is an abrupt jump of the bus voltage above the DC level followed by an exponential decay down to the DC level. The equalization pulse is characterized by its height V_{eq} and the voltage V_{end} reached at the end of the equalization pulse.

See the KNX Twisted Pair Standard (KNX TP1−256) for more detailed KNX information.

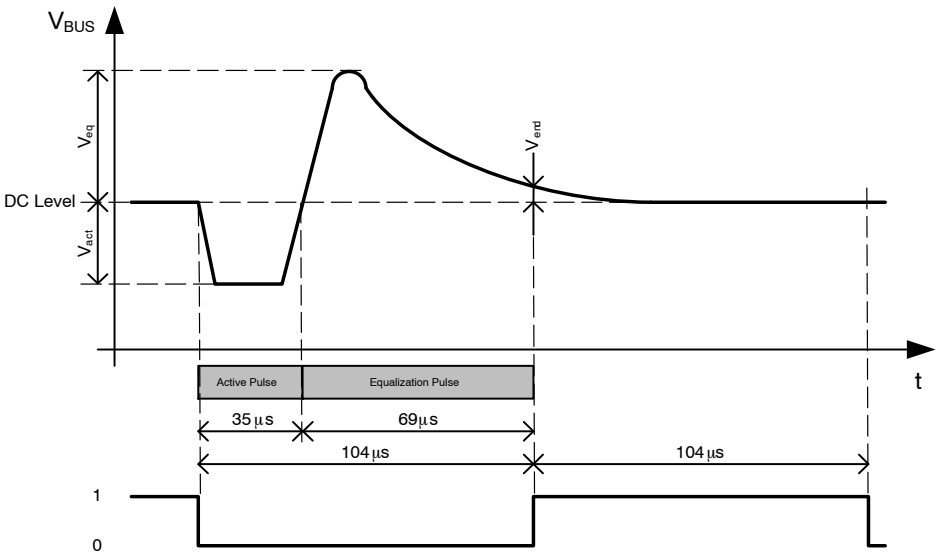

Figure 15. KNX Bus Voltage versus Digital Value

KNX Bus Transmitter

The purpose of the transmitter is to produce an active pulse (see Figure 15) between 6 V and 9 V regardless of the bus impedance (Note 1). In order to do this the transmitter will sink as much current as necessary until the bus voltage drops by the desired amount.

KNX Bus Receiver

The receiver detects the beginning and the end of the active pulse. The detection threshold for the start of the active pulse is −0.45 V (typ.) below the average bus voltage. The detection threshold for the end of the active pulse is −0.2 V (typ.) below the average bus voltage giving a hysteresis of 0.25 V (typ.).

Bus Coupler

The role of the bus coupler is to extract the DC voltage from the bus and provide a stable voltage supply for the purpose of powering the NCN5121. This stable voltage supplied by the bus coupler is called VFILT, and will follow the average bus voltage. The bus coupler also makes sure that the current drawn from the bus changes very slowly. For this a large filter capacitor is used on the VFILT−pin. Abrupt load current steps are absorbed by the filter capacitor. Long−term stability requires that the average bus coupler input current is equal to the average (bus coupler) load current. This is shown by the parameter $\Delta I_{coupler}/\Delta t$, which indicates the bus current slope limit. The bus coupler will also limit the current to a maximum of $I_{coupler_lim}$. At startup, this current limit is increased to $I_{coupler_lim,startup}$ to allow for fast charging of the VFILT bulk capacitance.

There are 4 conditions that determine the dimensioning of the VFILT capacitor. First, the capacitor value should be between 12.5 μF and 4000 μF to garantuee proper operation of the part. The next requirement on the VFILT capacitor is determined by the startup time of the system. According to the KNX specification, the total startup time must be below 10 s. This time is comprised of the time to charge the VFILT capacitor to 12 V (where the DCDC convertor becomes operatonal) and the startup time of the rest of the system $t_{startup,system}$. This gives the following formula:

$$C < \left(10\ s - t_{startup,system}\right) \times \frac{I_{coupler_Ilim,startup}}{V_{FILTH}}$$

1. Maximum bus impedance is specified in the KNX Twisted Pair Standard

The third limit on VFILT capacitor value is the required capacitor value to filter out current steps ΔI_{step} of the system without going into reset.

$$C > \frac{\Delta I_{step}{}^2}{\left(2 \cdot (V_{BUS1} - V_{coupler_drop} - V_{FILTL}) \cdot I_{slope}\right)}$$

The last condition on the size of VFILT is the desired warning time $t_{warning}$ between SAVEB and RESETB in case the bus voltage drops away. This is determined by the current consumption of the system I_{system}.

$$C > I_{system} \times \frac{\left(t_{warning} + t_{busfilter}\right)}{\left(V_{BUS1} - V_{coupler_drop} - V_{FILTL}\right)}$$

The bus coupler is implemented as a linear voltage regulator. For efficiency purpose, the voltage drop over the bus coupler is kept minimal (see Table 4).

KNX Impedance Control

The impedance control circuit defines the impedance of the bus device during the active and equalization pulses. The impedance can be divided into a static and a dynamic component, the latter being a function of time. The static impedance defines the load for the active pulse current and the equalization pulse current. The dynamic impedance is produced by a block, called an equalization pulse generator, that reduces the device current consumption (i.e. increases the device impedance) as a function of time during the equalization phase so as to return energy to the bus.

Fixed and Adjustable DC−DC Converter

The device contains two DC−DC buck converters, both supplied from VFILT.

DC1 provides a fixed voltage of 3.3 V. This voltage is used as an internal low voltage supply (V_{DDA} and V_{DDD}) but can also be used to power external devices (VDD1−pin). DC1 is automatically enabled during the power−up procedure (see Analog State Diagram, p24).

DC2 provides a programmable voltage by means of an external resistor divider. It is not used as an internal voltage supply making it not mandatory to use this DC−DC converter (if not needed, tie the VDD2MV pin to VDD1, see also Figure 12).

DC2 can be monitored (<VDD2>, see System Status Service, p40), and/or disabled by a command from the host controller (<DC2EN>, see Analog Control Register 0, p58). DC2 will only be enabled when VFILT−bit is set (<VFILT>, see System Status Service, p40). The status of DC2 can be monitored (<VDD2>, see System Status Service, p40).

The voltage divider can be calculated as follows:

$$R_4 = R_5 \times \frac{V_{VDD2} - 1.2}{1.2} \qquad \text{(eq. 1)}$$

Both DC−DC converters make use of slope control to improve EMC performance (see Table 5). To operate DC1 and DC2 correctly, the voltage on the VIN−pin should be higher than the highest value of DC1 and DC2.

Although both DC−DC converters are capable of delivering 100 mA, the maximum current capability will not always be usable. One always needs to make sure that the KNX bus power consumption stays within the KNX specification. The maximum allowed current for the DC−DC converters and V20V regulator can be estimated as next:

$$\frac{V_{BUS} \times \left(I_{BUS} - I_{20V}\right)}{2 \times \left[\left(V_{DD1} \times I_{DD1}\right) + \left(V_{DD2} \times I_{DD2}\right)\right]} \geq 1 \qquad \text{(eq. 2)}$$

I_{BUS} will be limited by the KNX standard and should be lower or equal to $I_{coupler}$ (see Table 4). Minimum V_{BUS} is 20 V (see KNX standard). V_{DD1} and V_{DD2} can be found back in Table 4. I_{DD1}, I_{DD2} and I_{20V} must be chosen in a correct way to be in line with the KNX specification (Note 2).

Although DC2 can operate up to 21 V, it will not be possible to generate this 21 V under all operating conditions. See application note AND9135 for defining the optimum inductor and capacitor of the DC−DC converters. When using low series resistance output capacitors on DC2, it is advised to split the current sense resistor as shown in Figure 18 to reduce ripple current for low load conditions.

V20V Regulator

This is the 20 V low drop linear voltage regulator used to supply external devices. As it draws current from VFILT, this current is seen without any power conversion directly at the VBUS1 pin.

The V20V regulator starts up by default but can be disabled by a command from the host controller (<V20VEN>, see Analog Control Register 0, p58). When the V20V regulator is not used, no load capacitor needs to be connected (see C7 of Figures 12, 13 and 14). Connect V20V−pin with VFILT−pin in this case.

V20V regulator will only be enabled when VFILT−bit is set (<VFILT>, see System Status Service, p40). The host controller can also monitor the status of the regulator (<V20V>, see System Status Service, p40). The 20 V regulator has a current limit that depends on the FANIN resistor value, and the value of bits 0−3 (V20VCLIMIT[0:2]) of the analog control register. In Table 4, the typical value of the current limit at startup is given as I_{20V_lim} (V20VCLIMIT[0:2] initializes at 100). For each bit difference, the current limit is adjusted up or down by $\Delta I_{20\ V,STEP}$.

Xtal Oscillator

An analog oscillator cell generates the main clock of 16 MHz. This clock is directly provided to the digital block to generate all necessary clock domains.

An input pin XSEL is foreseen to enable the use of a quartz crystal (see Figure 16) or an external clock generator (see Figure 17) to generate the main clock.

2. The formula is for a typical KNX application. It's only given as guidance and does not guarantee compliance with the KNX standard.

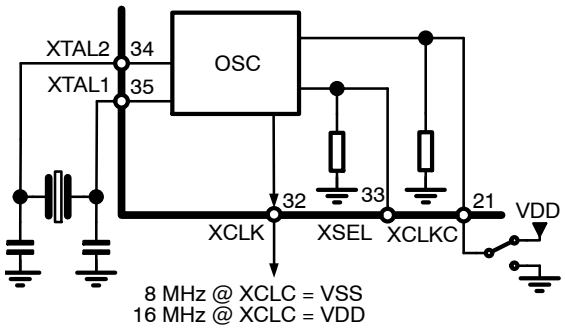

Figure 16. XTAL Oscillator

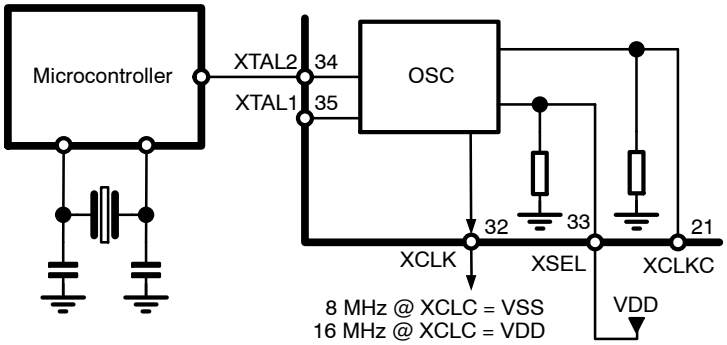

Figure 17. External Clock Generator

The XCLK−pin can be used to supply a clock signal to the host controller. This clock signal can be switched off by a command from the host controller (<XCLKEN>, see Analog Control Register 0, p58).

After power−up, a 4 MHz (Note 3) clock signal will be present on the XCLK−pin during Stand−By. When Normal State is entered, a 8 or 16 MHz clock signal will be present on the XCLK−pin. See also Figure 20. To output an 8 MHz clock on the XCLK pin, the XCLKC pin must be pulled to ground. When the XCLKC pin is pulled up to VDDD, the XCLK pin will output a 16 MHz clock signal.

When Normal State is left and Stand−By State is re−entered due to an issue different than an Xtal issue, the 8 or 16 MHz clock signal will still be present on the XCLK−pin during the Stand−By State. If however Stand−By is entered from Normal State due to an Xtal issue, the 4 MHz clock signal will be present on the XCLK−pin. See also Table 7.

FANIN−pin

The FANIN−pin defines the maximum allowed bus current and bus current slopes. If the FANIN−pin is kept floating, pulled up to V_{DD}, or pulled down with a resistance higher than 250 kΩ, NCN5121 will limit the KNX bus current slopes to 0.5 mA/ms at all times. NCN5121 will also limit the KNX bus current to 30 mA during start−up. During normal operation, NCN5121 is capable of taking 12 mA (= $I_{coupler}$) from the KNX bus for supplying external loads (DC1, DC2 and V20V).

If the FANIN−pin is pulled to ground with a resistance smaller than 2 kΩ the operation is similar as above with the exception that the KNX bus current slopes will be limited to 1 mA/ms at all times, the KNX bus current will be limited to 60 mA during start−up and up to 24 mA ($I_{coupler}$) can be taken from the KNX bus during normal operation.

Definitions for Start−Up and Normal Operation (as given above) can be found in the KNX Specification.

Transmit Trigger

When bit 3 of analog control register 0 is set, the TRIG−pin will output a signal that goes high 1 bit time before the start of a scheduled transmission, and goes low when the transmission is complete or a collision is detected. This can be used during development as verification of transmission. Note that a scheduled transmission is a frame that is sent less than $t_{BUS,IDLE}$ (TODO s) after previous communication on the bus. When a frame is transmitted on a bus which has been idle for a longer time, or an ACK/NACK/BUSY response is sent, the transmission will start immediately after the trigger goes high, and the time between trigger high and frame transmission start will not be consistent.

RESETB− and SAVEB−pin

The RESETB signal can be used to keep the host controller in a reset state. When RESETB is low this indicates that the bus voltage is too low for normal operation and that the fixed DC−DC converter has not started up. It could also indicate a Thermal Shutdown (TSD). The RESETB signal also indicates if communication between host and NCN5121 is possible.

The SAVEB signal indicates correct operation. When SAVEB goes low, this indicates a possible issue (loss of bus power or too high temperature) which could trigger the host controller to save critical data or go to a save state. SAVEB goes low immediately when VFILT goes below 14 V (due to sudden large current usage) or after 2 ms when VBUS goes below 20 V. RESETB goes low when VFILT goes below 12 V.

RESETB− and SAVEB−pin are open−drain pins with an internal pull−up resistor to V_{DDD}.

Voltage Supervisors

NCN5121 has different voltage supervisors monitoring VBUS, VFILT, VDD2 and V20V. The general function of a

voltage supervisor is to detect when a voltage is above or below a certain level. The levels for the different voltages monitored can be found back in Table 4 (see also Figures 4, 5, 6 and 7).

The status of the voltage supervisors can be monitored by the host controller (see System Status Service, p40).

Depending on the voltage supervisor outputs, the device can enter different states (see Analog State Diagram, p24).

3. The 4 MHz clock signal is internally generated and will be less accurate as the crystal generated clock signal of 8 or 16 MHz.

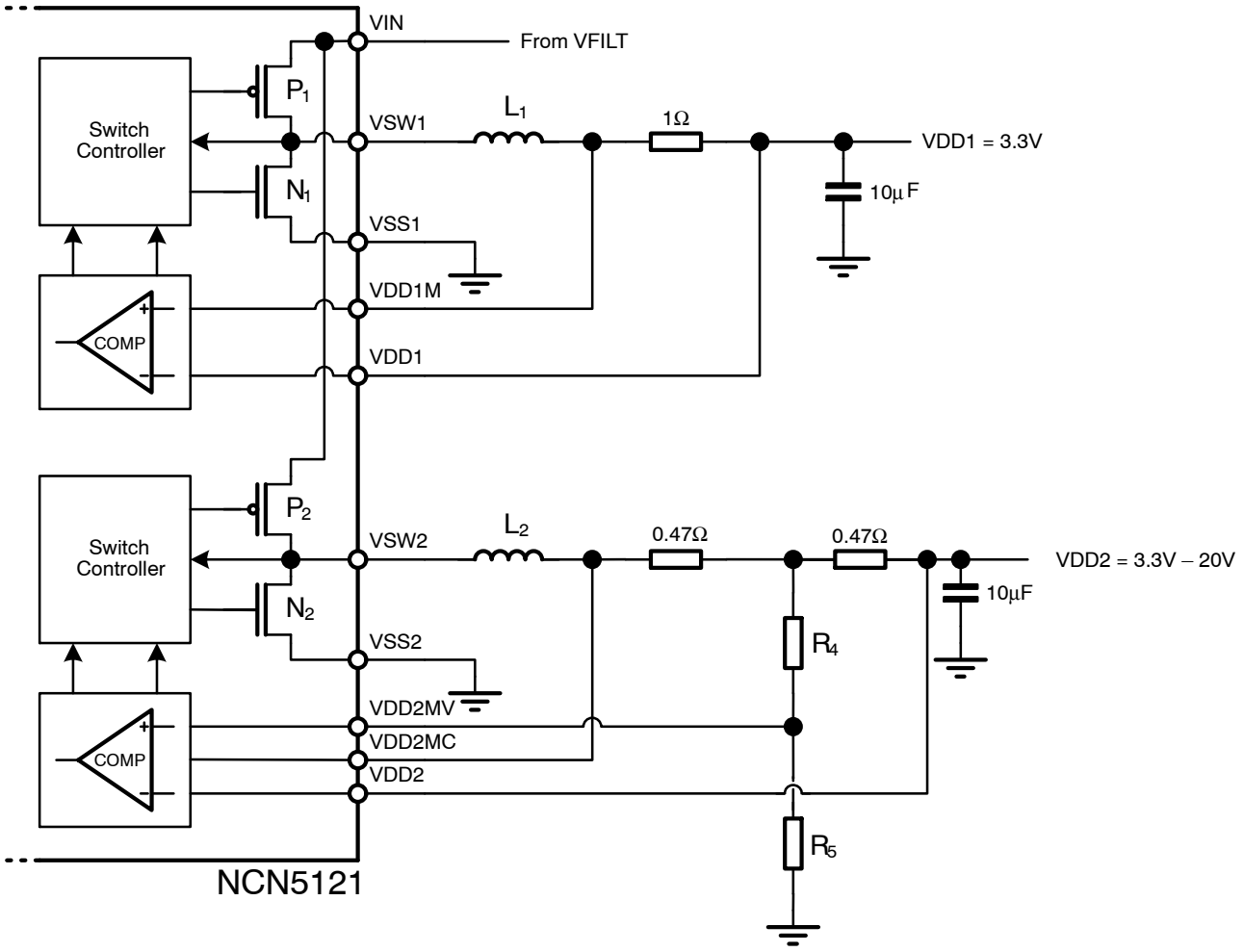

Figure 18. Fixed (VDD1) and Adjustable (VDD2) DC−DC Converter

Table 7. STATUS OF SEVERAL BLOCKS DURING THE DIFFERENT (ANALOG) STATES

State	Osc	XCLK	VDD1	VDD2/V20V	SPI/UART	KNX
Reset	Off	Off	Off	Off	Inactive	Inactive
Start−Up	Off	Off	Start−up	Off	Inactive	Inactive
Stand−By (Note 17)	Off	4 MHz	On	Start−Up	Active	Inactive (Note 22)
Stand−By (Note 18)	On (Note 20)	On (Note 20)	On	On (Note 21)	Active	Inactive (Note 22)
Normal	On	On (Note 19)	On	On	Active	Active

17. Only valid when entering Stand−By from Start−Up State.
18. Only valid when entering Stand−By from Normal State.
19. 8 MHz or 16 MHz depending on XCLKC.
20. 4 MHz signal if Stand−By state was entered due to oscillator issue. Otherwise 8 MHz or 16 MHz clock signal.
21. Only operational if Stand−By state was not entered due to VDD2 or V20V issue.
22. Under certain conditions KNX bus is (partly) active. See Digital State Diagram for more details.

Temperature Monitor

The device produces an over−temperature warning (TW) and a thermal shutdown warning (TSD). Whenever the junction temperature rises above the Thermal Warning level (T_{TW}), the SAVEB−pin will go low to signal the issue to the host controller. Because the SAVEB−pin will not only go low on a Thermal Warning (TW), the host controller needs to verify the issue by requesting the status (<TW>, see System Status Service, p40). When the junction temperature is above TW, the host controller should undertake actions to reduce the junction temperature and/or store critical data.

When the junction temperature reaches Thermal Shutdown (T_{TSD}), the device will go to the Reset State. The Thermal Shutdown will be stored (<TSD>, see Analog Status Register, p60) and the analog and digital power supply will be stopped (to protect the device). The device will stay in the Reset State as long as the temperature stays above T_{TSD}.

If the temperature drops below T_{TSD}, Start−Up State will be entered (see also Figure 19). At the moment VDD1 is back up and the OTP memory is read, Stand−By State will be entered and RESETB will go high. The Xtal oscillator will be started. Once the temperature has dropped below T_{TW} and all voltages are high enough, Normal State will be entered. SAVEB will go high and KNX communication is again possible.

The TW−bit will be reset at the moment the junction temperature drops below T_{TW}. The TSD−bit will only be reset when the junction temperature is below T_{TSD} and the <TSD> bit is read (see Analog Status Register, p60).

Figure 8 gives a better view on the temperature monitor.

Watchdog

NCN5121 provides a Watchdog function to the host controller. The Watchdog function can be enabled by means of the WDEN−bit (<WDEN>, see Watchdog Register, p58). Once this bit is set to ‘1’, the host controller needs to re−write this bit to clear the internal timer before the Watchdog Timeout Interval expires (Watchdog Timeout Interval = <WDT>, see Watchdog Register, p58).

In case the Watchdog is acknowledged too early (before t_{WDPR}) or not within the Watchdog Timeout Interval (t_{WDTO}), the RESETB−pin will be made low (= reset host controller).

Table 8 gives the Watchdog timings t_{WDTO} and t_{WDPR}. Details on <WDT> can be found in the Watchdog Register, p58.

Table 8. WATCHDOG TIMINGS

WDT[3:0]	t_{WDTO} [ms]	t_{WDPR} [ms]
0000	33	2
0001	66	4
0010	98	6
0011	131	8
0100	164	10
0101	197	12
0110	229	14
0111	262	16
1000	295	18
1001	328	20
1010	360	23
1011	393	25
1100	426	27
1101	459	29
1110	492	30
1111	524	31

Analog State Diagram

The analog state diagram of NCN5121 is given in Figure 19. The status of the oscillator, XCLK−pin, DC−DC converters, V20V regulator, serial and KNX communication during the different (analog) states is given in Table 7.

Figure 20 gives a detailed view on the start−up behavior of NCN5121. After applying the bus voltage, the filter capacitor starts to charge. During this Reset State, the current drawn from the bus is limited to $I_{coupler}$ (for details see the KNX Standards). Once the voltage on the filter capacitor reaches 10 V (typ.), the fixed DC−DC converter (powering VDDA) will be enabled and the device enters the Start−Up State. When V_{DD1} gets above 2.8 V (typ.), the OTP memory is read out to trim some analog parameters (OTP memory is not accessible by the user). When done, the Stand−By State is entered and the RESETB−pin is made high. If at this moment V_{BUS} is above V_{BUSH}, the VBUS−bit will be set (<VBUS>, see System Status Service, p40). After aprox. 2 ms the Xtal oscillator will start. When V_{FILT} is above V_{FILTH} DC2 and V20V will be started. When the Xtal oscillator has started, no Thermal Warning (TW) or Thermal Shutdown (TSD) was detected and the VBUS−, VFILT−, VDD2− and V20V−bits are set, the Normal State will be entered and SAVEB−pin will go high.

Figure 21 gives a detailed view on the shut−down behavior. If the KNX bus voltage drops below V_{BUSL} for more than t_{bus_filter}, the VBUS−bit will be reset (<VBUS>, see System Status Service, p40) and the Standy−By State is entered. SAVEB will go low to signal this. When VFILT drops below V_{FILTL}, DC2 and the V20V regulator will be switched off. When VFILT drops below 6.5 V (typ), DC1 will be switched off and V_{DD1} drops below 2.8 V (typ.) the device goes to Reset State (RESETB low).

Analog Output

A multiplexed analog signal is available on the ANAOUT−pin for monitoring signal levels. The signal read out on this pin can be configured through the Analog Output Control bits (<ANAOUTCTRL>, see Analog Control Register 1, p 52).

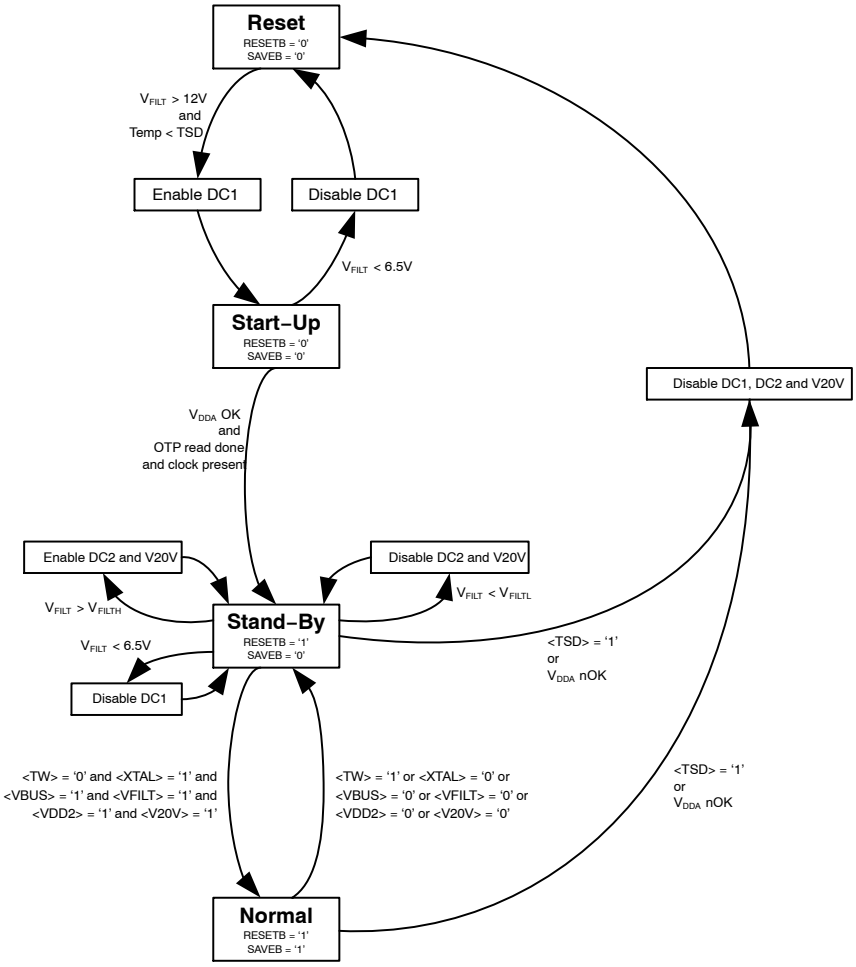

Remarks: − <TW>, <XTAL>, <VBUS>, <VFILT>, <VDD2> and <V20V> are internal status bits which can be verified with the System State Service.
− <TSD> is an internal signal indicating a Thermal Shutdown. This internal signal cannot be read out.
− Although Reset State could be entered from Normal State on a TSD, Stand − By State will be entered first due to a TW.

Figure 19. Analog State Diagram

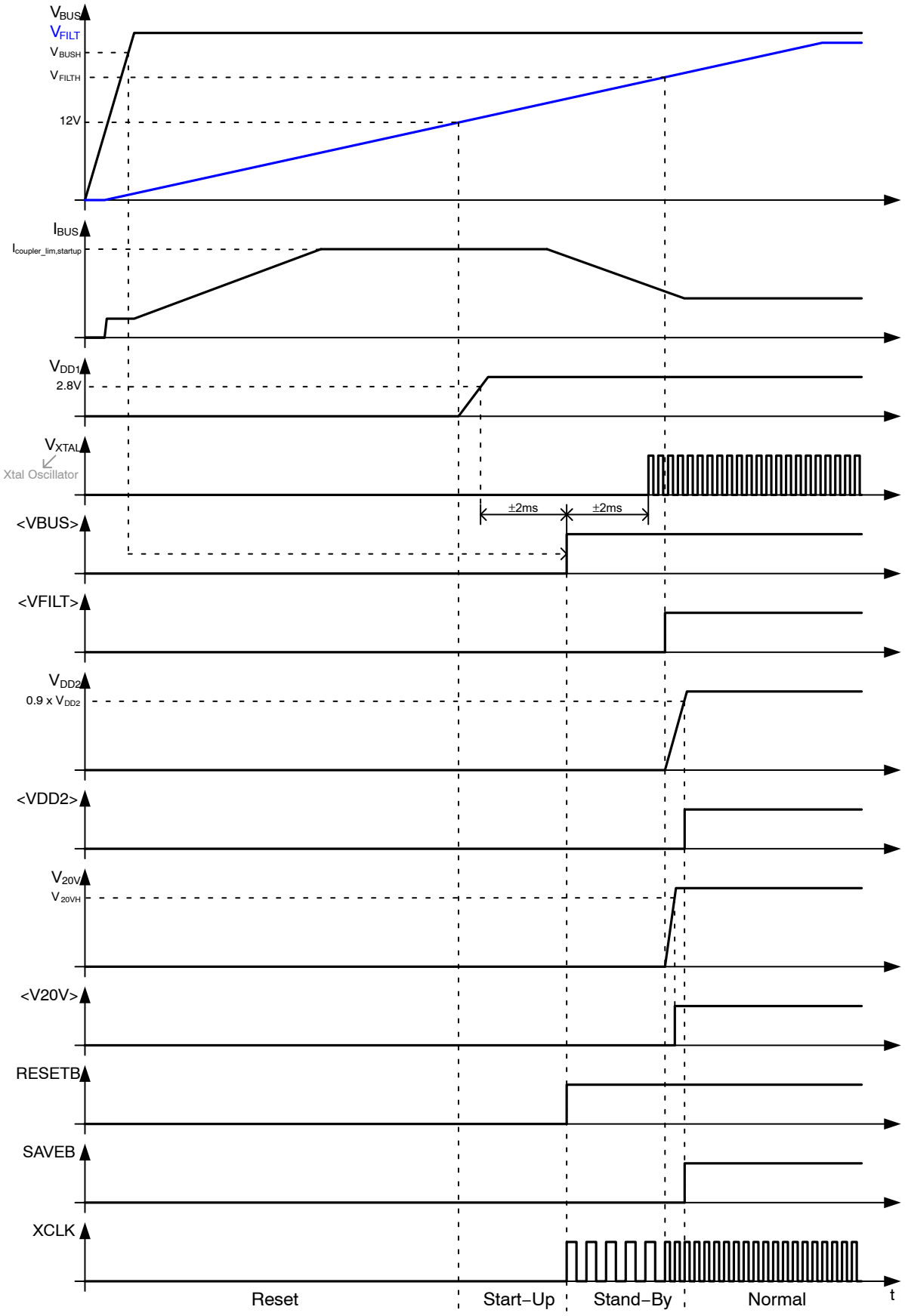

Remarks: VDD1 directly connected to VDDA.

Figure 20. Start−Up Behavior

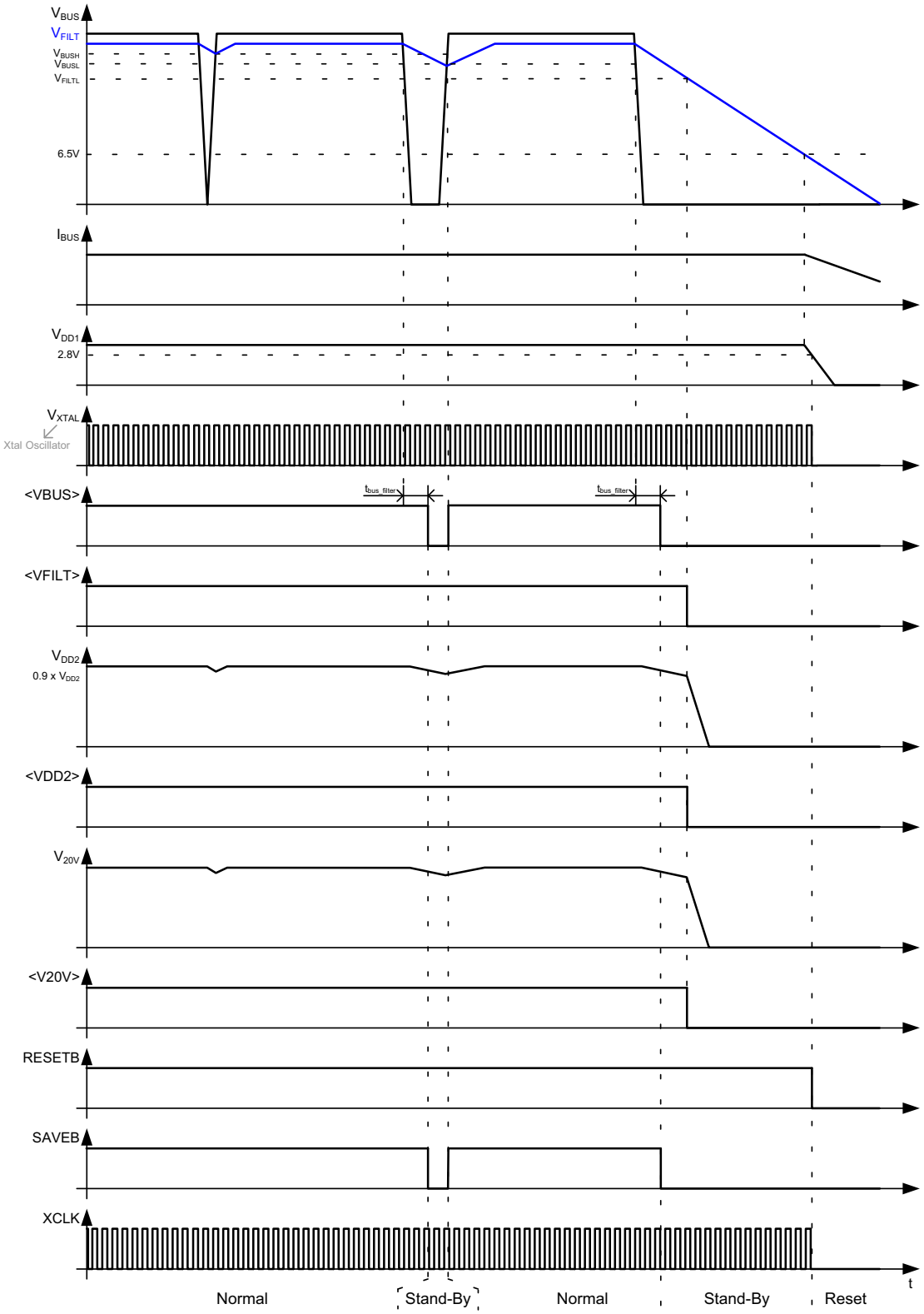

Remarks: VDD1 directly connected to VDDA.

Figure 21. Shut−Down Behavior

Interface Mode

The device can communicate with the host controller by means of a UART interface or an SPI interface. The selection of the interface is done by the pins MODE1, MODE2, TREQ, SCK/UC2 and CSB/UC1.

Layout Recommendation

Take extra care to keep the trace inductance between VBUS1 net and CCP pin on the PCB as small as possible by maximizing the trace thickness and reducing the length. As a rule of thumb, keep the trace length below approximately 5 mm.

Table 9. INTERFACE SELECTION

TREQ	MODE2	MODE1	SCK/UC2	CSB/UC1	SDI/RXD	SDO/TXD	Description
0	0	0	0	0	RXD	TXD	9−bit UART−Mode, 19200 bps
0	0	0	0	1			9−bit UART−Mode, 38400 bps
0	0	0	1	0			8−bit UART−Mode, 19200 bps
0	0	0	1	1			8−bit UART−Mode, 38400 bps
1	0	0	DC2EN	V20VEN	Driver	Receiver	Analog Mode
TREQ	0	1	SCK (out)	CSB (out)	SDI	SDO	SPI Master, 125 kbps
TREQ	1	0					SPI Master, 500 kbps

NOTE: X = Don't Care

UART Interface

The UART interface is selected by pulling pins TREQ, MODE1 and MODE2 to ground. Pin UC2 is used to select the UART Mode (‘0’ = 9−bit, ‘1’ = 8−bit) and pin UC1 is used to select the baudrate (‘0’ = 19200 bps, ‘1’ = 38400 bps). The UART interface allows full duplex, asynchronous communication.

The difference between 8−bit mode and 9−bit mode is that in 9−bit an additional parity bit is transmitted. This parity bit is used as an even parity bit (with exception of the internal register read and write services where the parity bit is meaningless and should be ignored). However, when the NCN5121 detects an acceptance window error or pulse duration error on the KNX bus, the parity bit is also encoded to indicate an error in the byte. In 8−bit mode one extra service is available (U_FrameState.ind). The SDI/RXD−pin is the NCN5121 UART receive pin and is used to send data from the host controller to the device. Pin SDO/TXD is the NCN5121 UART transmit pin and is used to transmit data between the device and the host controller. Figure 12 gives an UART application example (9−bit, 19200 bps). Data is transmitted LSB first.

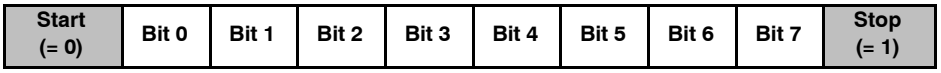

Figure 22. 8−bit UART Mode



Figure 23. 9−bit UART Mode

One special UART Mode is foreseen called Analog Mode. When this mode is selected (TREQ = ‘1’, MODEx = ‘0’) an immediate connection is made with the KNX transmitter receiver (see Figure 24). Bit level coding/decoding has to be done by the host controller. Keep in mind that the signals on the SDI/RXD− and SDO/TXD−pin are inverted. Figure 14 gives an Analog Mode application example. In Analog Mode, the UC1 and UC2 pins are used to enable or disable the 20 V regulator and DC2 controller. When pulled low, these blocks are enabled. When one of these pins is pulled to VDDD, the respective block is disabled. When using the device in Analog Mode, no clock needs to be provided to the device.

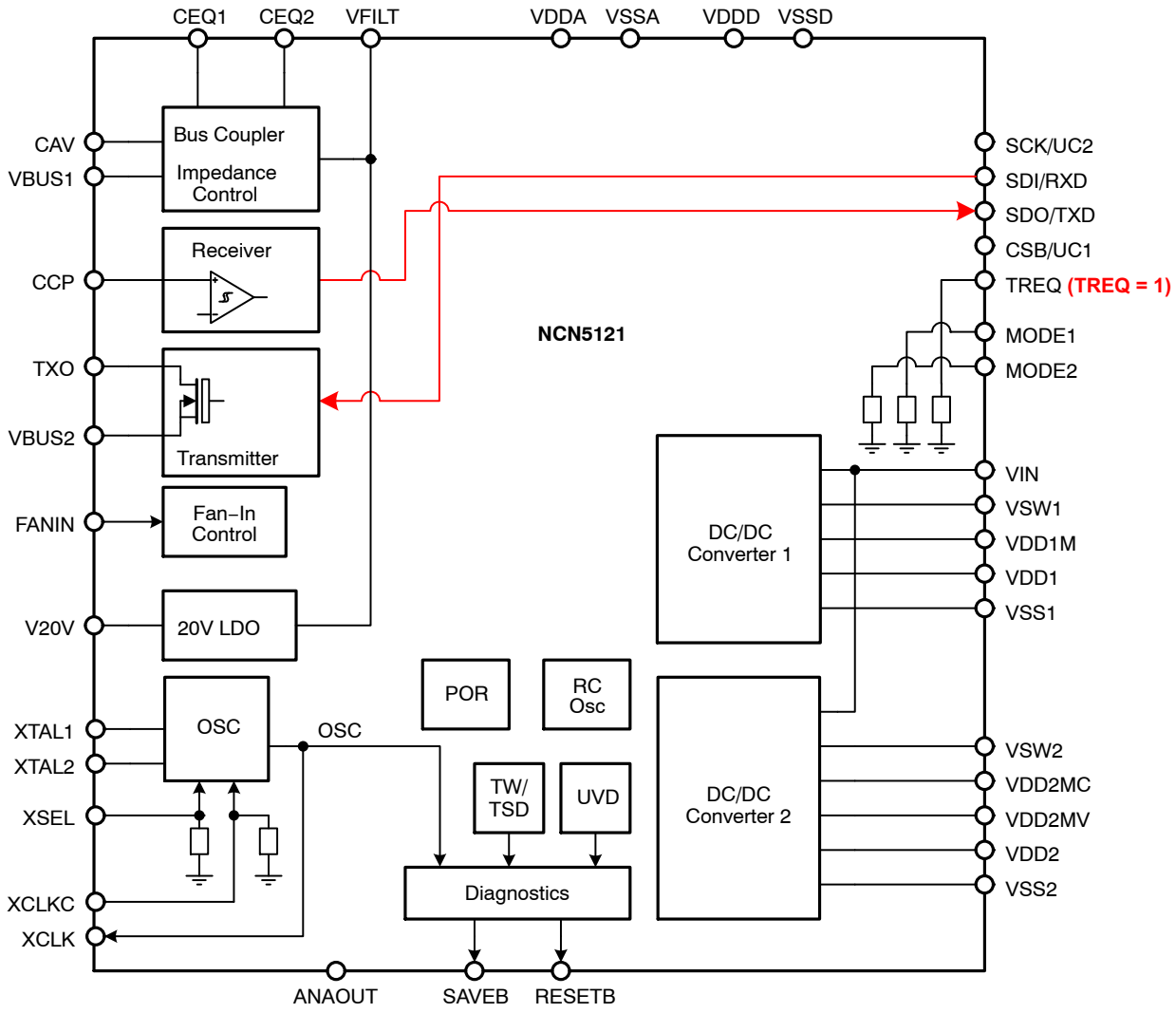

Figure 24. Analog UART Mode

SPI Interface

The SPI interface is selected by MODE1− and MODE2−pin. The baudrate is determined by which MODE−pin is pulled high (MODE1 pulled high = 125 kbps, MODE2 pulled high = 500 kbps).

The SPI interface allows full duplex synchronous communication between the device and the host controller. The interface operates in Mode 0 (CPOL and CPHA = ‘0’) meaning that the data is clocked out on the falling edge and sampled on the rising edge. The LSB is transmitted first.

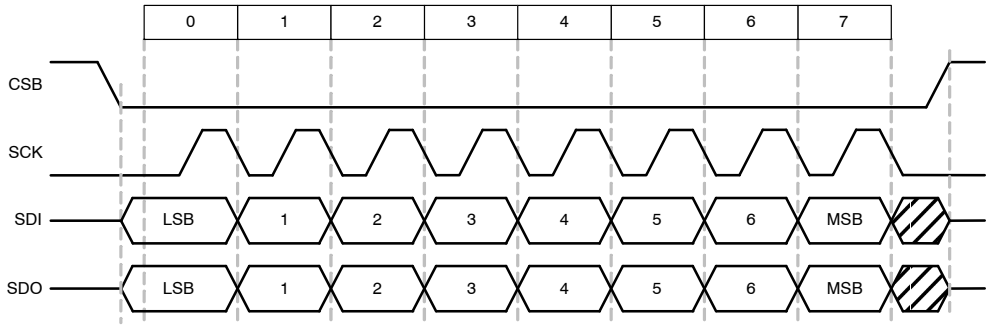

Figure 25. SPI Transfer

During SPI transmission, data is transmitted (shifted out serially) on the SDO/TXD−pin and received (shifted in serially) on the SDI/RXD−pin simultaneously. SCK/UC2 is set as output and is used as the serial clock (SCK) to synchronize shifting and sampling of the data on the SDI− and SDO−pin. The speed of this clock signal is selectable (see Table 9). The slave select line (CSB/UC1−pin) will go low during each transmission allowing to selection the host controller (CSB−pin is high when SPI is in idle state).

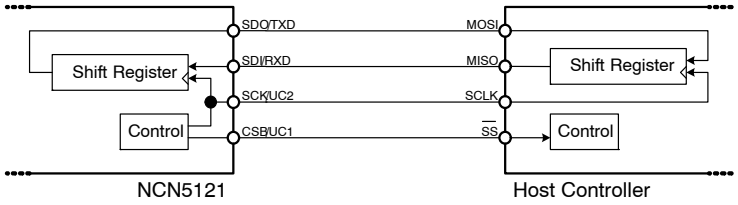

Figure 26. SPI Master

In an SPI network only one SPI Master is allowed (in this case NCN5121). To allow the host controller to communicate with the device the TREQ−pin can be used (Transmit Request). When NCN5121 detects a negative edge on TREQ, the device will issue dummy transmission of 8 bits which will result in a transmission of data byte from the host controller to the device. See Figure 11 for details on the timings. See Figure 13 for an SPI application example.

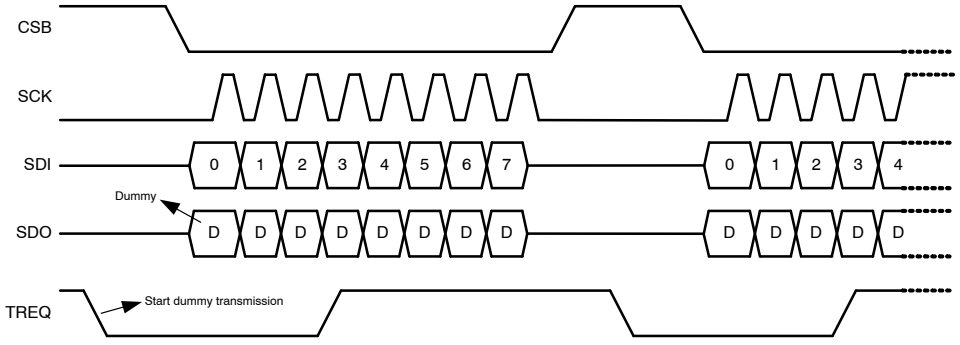

Figure 27. Transmission Request

DIGITAL FUNCTIONAL DESCRIPTION

The implementation of the Data Link Layer as specified in the KNX standard is divided in two parts. All functions related to communication with the Physical Layer and most of the Data Link Layer services are inside NCN5121, the rest of the functions and the upper communication layers are implemented into the host controller (see Figure 28).
The host controller is responsible for handling:

- Checksum
- Parity
- Addressing
- Length

The NCN5121 is responsible for handling:

- Checksum
- Parity
- Acknowledge
- Repetition
- Timing

Digital State Diagram

The digital state diagram is given in Figure 29.

The current mode of operation can be retrieved by the host controller at any time (when RESETB−pin is high) by issuing the U_SystemStat.req service and parsing back U_SystemStat.ind service (see System Status Service, p40).

Table 10. NCN5121 DIGITAL STATES

State	Explanation
RESET	Entered after Power On Reset (POR) or in response to a U_Reset.req service issued by the host controller. In this state NCN5121 gets initialized, all features disabled and services are ignored and not executed.
POWER−UP / POWER−UP STOP	Entered after Reset State or when VBUS, VFILT or Xtal are not operating correctly (operation of VBUS, VFILT and XTAL can be verified by means of the System Status Service, p40). Communication with KNX bus is not allowed. U_SystemStat.ind can be used to verify this state (code 00).
SYNC	NCN5121 remains in this state until it detects silence on the KNX bus for at least 40 Tbits. Although the receiver of NCN5121 is on, no frames are transmitted to the host controller. U_SystemStat.ind can be used to verify this state (code 01).
STOP	This state is useful for setting−up NCN5121 safely or temporarily interrupting reception from the KNX bus. U_SystemStat.ind can be used to verify this state (code 10).
NORMAL	In this state the device is fully functional. Communication with the KNX bus is allowed. U_SystemStat.ind can be used to verify this state (code 11).

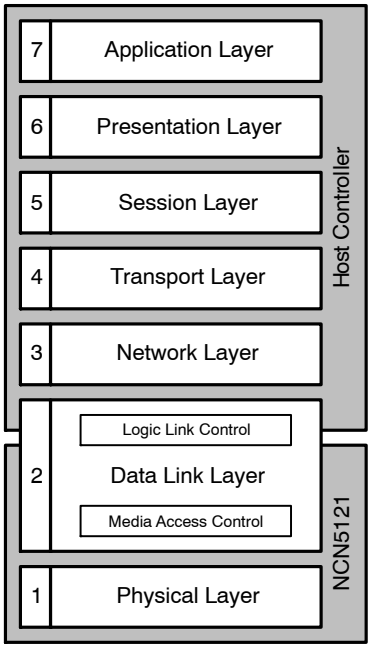

Figure 28. OSI Model Reference

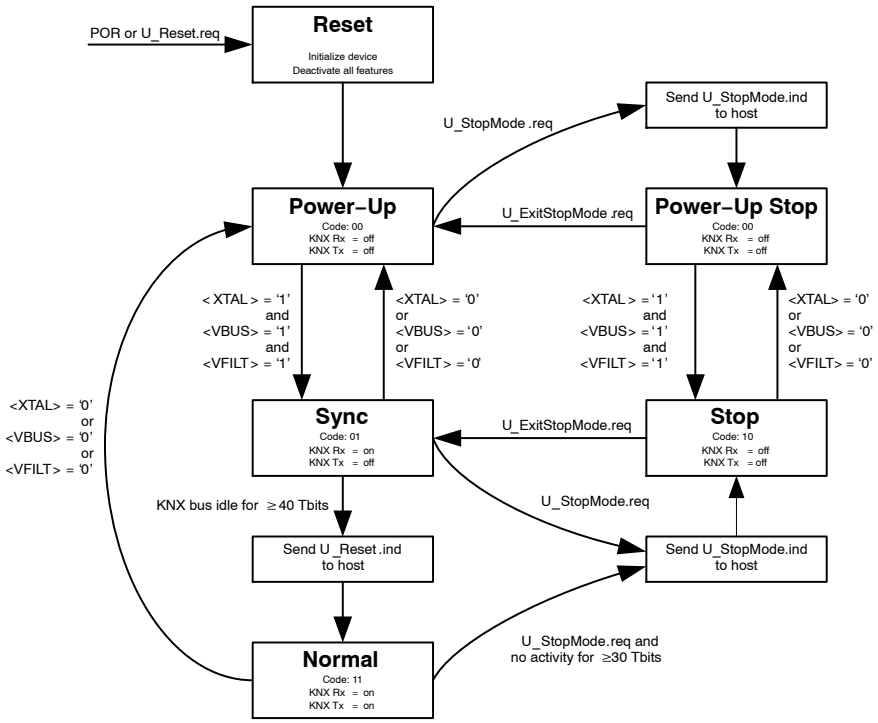

Figure 29. Digital State Diagram

Services

Execution of services depends on the digital state (Figure 29). Certain services are rejected if received outside the Normal State. The following table gives a view of all services and there acceptance during the different digital states.

Table 11. ACCEPTANCE OF SERVICES

Service	State				
	Normal	Stop	Sync	Power−Up	Bus Monitor
U_Reset.req	E	E	E	E	E
U_State.req	E	E	E	E	I
U_SetBusy.req	E	E	E	E	I
U_QuitBusy.req	E	E	E	E	I
U_Busmon.req	E	E	E	E	I
U_SetAddress.req	E	E	E	E	I
U_SetRepetition.req	E	E	E	E	I
U_L_DataOffset.req	E	E	E	E	I
U_SystemStat.req	E	E	E	E	I
U_StopMode.req	E	I	E	E	E
U_ExitStopMode.req	I	E	I	I	E
U_Ackn.req	E	R	R	R	I
U_Configure.req	E	E	E	E	I
U_IntRegWr.req	E	E	E	E	E
U_IntRegRd.req	E	E	E	E	E
U_L_DataStart.req	E	R	R	R	I
U_L_DataCont.req	E	R	R	R	I
U_L_DataEnd.req	E	R	R	R	I
U_PollingState.req	E	E	E	E	I

NOTE:

Bus Monitor state is not a separate state. It is applied on top of Normal, Stop, Sync or Power−Up State.

Legend: E = service is executed

I = service is ignored (not executed and no feedback sent to the host controller)

R = service is rejected (not executed, protocol error is sent back to the host controller through U_State.ind)

See Internal Register Read Service (p42) for limitations of U_IntRegRd.req

Table 12. SERVICES FROM HOST CONTROLLER

Control Field								Service Name	Hex	Remark	Extra Following Bytes	Total Bytes
7	6	5	4	3	2	1	0					
INTERNAL COMMANDS – DEVICE SPECIFIC												
0	0	0	0	0	0	0	1	U_Reset.req	01			1
0	0	0	0	0	0	1	0	U_State.req	02			1
0	0	0	0	0	0	1	1	U_SetBusy.req	03			1
0	0	0	0	0	1	0	0	U_QuitBusy.req	04			1
0	0	0	0	0	1	0	1	U_Busmon.req	05			1
1	1	1	1	0	0	0	1	U_SetAddress.req	F1		AddrHigh AddrLow X (don't care)	4
1	1	1	1	0	0	1	0	U_SetRepetition.req	F2		RepCntrs X (don't care) X (don't care)	4
0	0	0	0	1	i	i	i	U_L_DataOffset.req	08−0C	iii = MSB byte index (0…4)		1
0	0	0	0	1	1	0	1	U_SystemState.req	0D			1
0	0	0	0	1	1	1	0	U_StopMode.req	0E			1
0	0	0	0	1	1	1	1	U_ExitStopMode.req	0F			1
0	0	0	1	0	n	b	a	U_Ackn.req	10−17	n = nack b = busy a = addressed		1
0	0	0	1	1	p	c	m	U_Configure.req	18−1F	p = auto−polling c = CRC−CCITT m = frame end with MARKER		1
0	0	1	0	1	0	a	a	U_IntRegWr.req	28−2B	aa = address of internal register	Data to be written	2
0	0	1	1	1	0	a	a	U_IntRegRd.req	38−3B			1
1	1	1	0	s	s	s	s	U_PollingState.req	E0−EE	s = slot number (0 … 14)	PollAddrHigh PollAddrLow PollState	4
KNX TRANSMIT DATA COMMANDS												
1	0	0	0	0	0	0	0	U_L_DataStart.req	80		Control Octet (CTRL)	2
1	0	i	i	i	i	i	i	U_L_DataCont.req	81−BF	i = index (1…63)	Data octet (CTRLE, SA, DA, AT, NPCI, LG, TPDU)	2
0	1	l	l	l	l	l	l	U_L_DataEnd.req	47−7F	l = last index + 1 (7 … 63)	Check Octet (FCS)	2

With respect to command length, there are two types of services from the host controller:

- Single−byte commands: the control byte is the only data sent from the host controller to NCN5121.
- Multiple−byte commands: the following data byte(s) need to be handled according to the already received control byte.

With respect to command purpose there are two types of services from the host controller:

- Internal command: does not initiate any communication on the KNX bus.
- KNX transmit data command: initiates KNX communication

Table 13. SERVICES TO HOST CONTROLLER

Control Field								Service Name	Remark	Extra Following Bytes	Total Bytes
7	6	5	4	3	2	1	0				
DLL (LAYER 2) SERVICES (DEVICE IS TRANSPARENT)											
1	0	r	1	p1	p0	0	0	L_Data_Standard.ind	r = not repeated (‘1’) or repeated L_Data frame (‘0’) p1, p0 = priority		n
0	0	r	1	p1	p0	0	0	L_Data_Extended.ind			n
1	1	1	1	0	0	0	0	L_Poll_Data.ind			n
ACKNOWLEDGE SERVICES (DEVICE IS TRANSPARENT IN BUS MONITOR MODE)											
x	x	0	0	x	x	0	0	L_Ackn.ind	x = acknowledge frame		1
z	0	0	0	1	0	1	1	L_Data.con	z = positive (‘1’) or negative (‘0’) confirmation		1
CONTROL SERVICES – DEVICE SPECIFIC											
0	0	0	0	0	0	1	1	U_Reset..ind			1
sc	re	te	pe	tw	1	1	1	U_State.ind	sc = slave collision re = receive error te = transmit error pe = protocol error tw = temperature warning		1
re	ce	te	1	res	0	1	1	U_FrameState.ind	re = parity or bit error ce = checksum or length error te = timing error res = reserved		1
0	b	aa	ap	c	m	0	1	U_Configure.ind	b = reserved aa = auto−acknowledge ap = auto−polling c = CRC−CCITT m = frame end with MARKER		1
1	1	0	0	1	0	1	1	U_FrameEnd.ind			1
0	0	1	0	1	0	1	1	U_StopMode.ind			1
0	1	0	0	1	0	1	1	U_SystemStat.ind		V20V, VDD2, VBUS, VFILT, XTAL, TW, Mode	2

Each data byte received from the KNX bus is transparently transmitted to the host controller. An exception is the Acknowledge byte which is transmitted to the host controller only in bus monitoring mode. Other useful information can be transmitted to the host controller by request using internal control services.

A detailed description of the services is given on the next pages. For all figures, the MSB bit is always given on the left side no matter how the arrow is drawn.

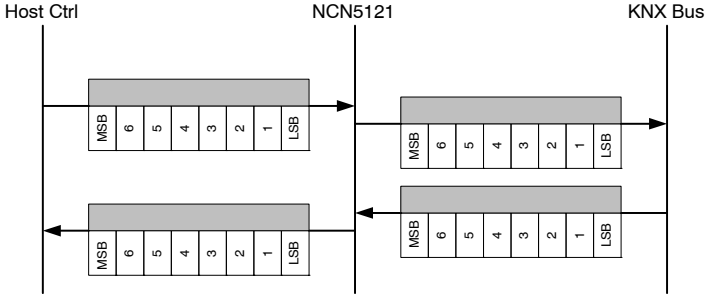

Figure 30. Bit Order of Services

Reset Service

Reset the device to the initial state.

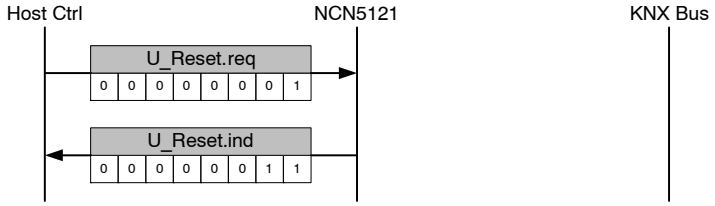

Figure 31. Reset Service

Remark: U_Reset.Ind will be send when entering Normal State (see Digital State Diagram, p31).

State Service

Get internal communication state of the device.

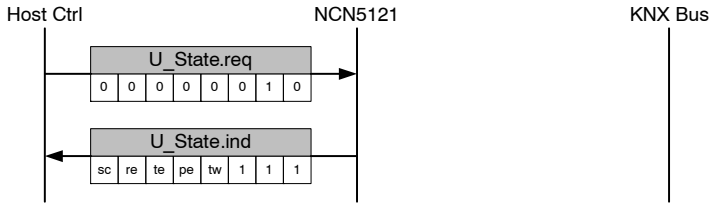

Figure 32. State Service

sc (slave collision): '1' if collision is detected during transmission of polling state
re (receive error): '1' if corrupted bytes were sent by the host controller. Corruption involves incorrect parity (9−bit UART only) and stop bit of every byte as well as incorrect control octet, length or checksum of frame for transmission.
te (transceiver error): '1' if error detected during frame transmission (sending '0' but receiving '1').
pe (protocol error): '1' if an incorrect sequence of commands sent by the host controller is detected.
tw (thermal warning): '1' if thermal warning condition is detected.

Set Busy Service

Activate BUSY mode.

During this time and when autoacknowledge is active (see *Set Address Service* p37), NCN5121 rejects the frames whose destination address corresponds to the stored physical address by sending the BUSY acknowledge. This service has no effect if autoacknowledge is not active.

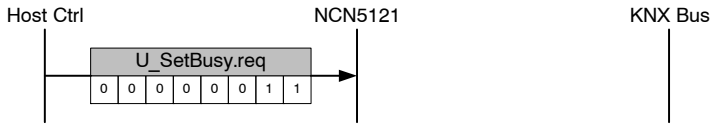

Figure 33. Set Busy Service

Remark: BUSY mode is deactivated immediately if the host controller confirms a frame by sending U_Ackn.req service.

Quit Busy Service

Deactivate the BUSY mode.

Restores back to the normal autoacknowledge behavior with ACK sent on the bus in response to addressing frame (only if autoacknowledge is active). This service has no effect if autoacknowledge is not active or BUSY mode was not set.

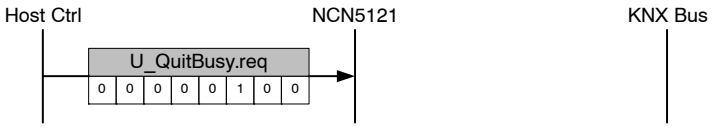

Figure 34. Quit Busy Service

Bus Monitor Service

Activate bus monitoring state.

In this mode all data received from the KNX bus is sent to the host controller without performing any filtering on Data Link Layer. Acknowledge Frames are also transmitted transparently. This state can only be exited by the Reset Service (see p36).

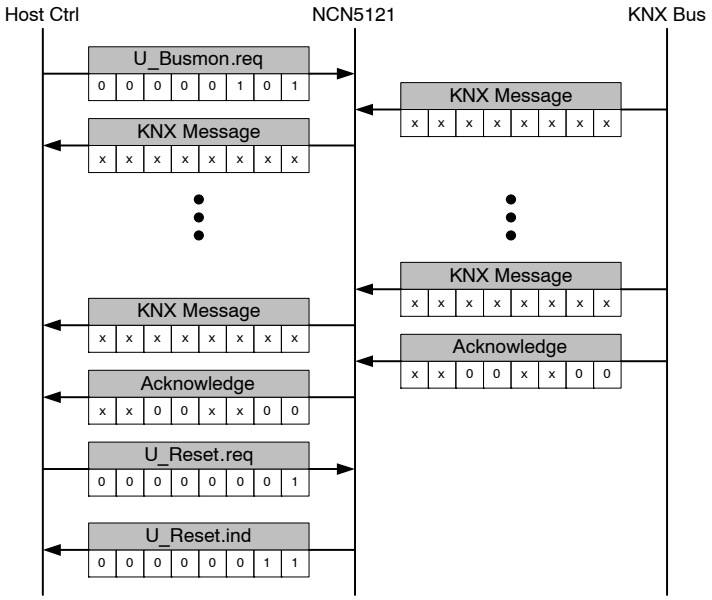

Figure 35. Bus Monitor Service

Remark:
x = don‘t care

Set Address Service

Sets the physical address of the device and activates the auto−acknowledge function.

NCN5121 starts accepting all frames whose destination address corresponds to the stored physical address or whose destination address is the group address by sending IACK on the bus. In case of an error detected during such frame reception, NCN5121 sends NACK instead of IACK.

When issued several times after each other, the first call will set the physical address and activate the auto−acknowledge. Following calls will only set the physical address because auto−acknowledge is already activated.

NCN5121 confirms activation of auto−acknowledge function by sending the U_Configure.ind service to the host controller.

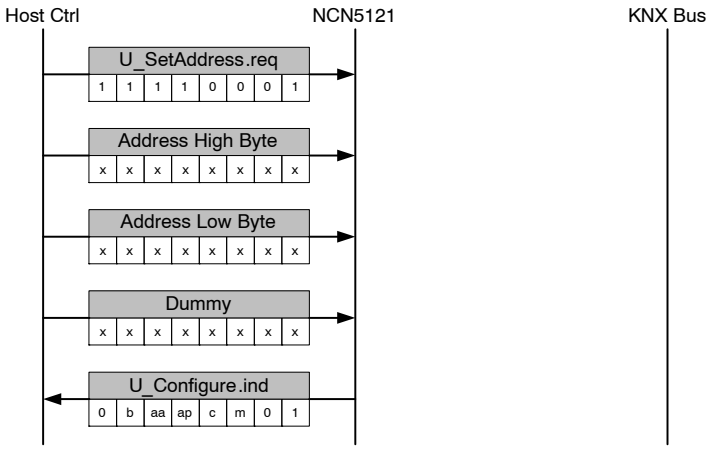

Figure 36. Set Address Service

b (busy mode): ‘1’ if busy mode is active. Can be enabled with U_SetBusy.req (see Set Busy Service, p36) and disabled with U_QuitBusy.req service (see *Quit Busy Service*, p36) or U_Ackn.req service (see *Receive Frame Service*, p51).

aa (auto−acknowledge): ‘1’ if auto−acknowledge feature is active. Can be enabled with U_SetAddress.req service (see *Set Address Service*, p37).

ap (auto−polling): ‘1’ if auto−polling feature is active. This feature can be enabled with U_Configure.req service (see *Configure Service*, p41).

c (CRC−CCITT): ‘1’ if CRC−CCITT feature is active. This feature can be enabled with U_Configure.req service (see *Configure Service*, p41).

m (frame end with MARKER): ‘1’ when feature is active. This feature can be enabled with U_Configure.req service (see *Configure Service*, p41).

Remarks:

- Set Address Service can be issued any time but the new physical address and the autoacknowledge function will only get active after the KNX bus becomes idle.
- Autoacknowledge can only be deactivated by a Reset Service (p36)
- x = don’t care
- Dummy byte can be anything. NCN5121 completely disregards this information.

Set Repetition Service

Specifies the maximum repetition count for transmitted frames when not acknowledged with IACK.

Separate counters can be set for NACK and BUSY frames. Initial value of both counters is 3.

If the acknowledge from remote Data Link Layer is BUSY during frame transmission, NCN5121 tries to repeat after at least 150 bit times KNX bus idle. The BUSY counter determines the maximum amount of times the frame is repeated. If the BUSY acknowledge is still received after the last try, an L_Data.con with a negative conformation is sent back to the host controller.

For all other cases (NACK acknowledgment received, invalid/corrupted acknowledge received or time−out after 30 bit times) NCN5121 will repeat after 50 bit times of KNX bus idle. The NACK counter determines the maximum retries. L_Data.con with a negative confirmation is send back to the host controller when the maximum retries were reached.

In worst case, the same request is transmitted (NACK + BUSY + 1) times before NCN5121 stops retransmission.

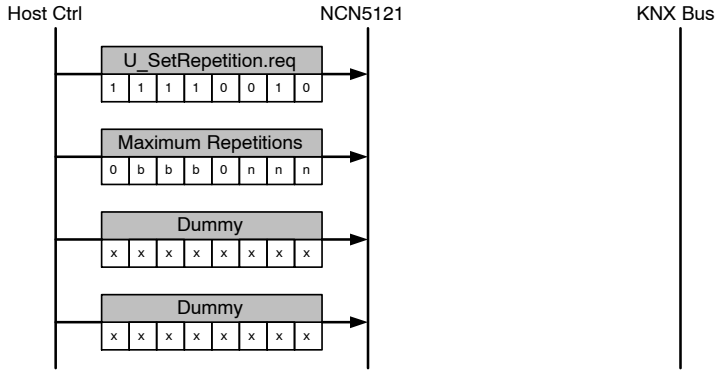

Figure 37. Set Repetition Service

bbb: BUSY counter (a frame will be retransmitted bbb−times if acknowledge with BUSY).
nnn: NACK counter (a frame will be retransmitted nnn−times if acknowledge with NACK).

Remark: Bit 3 and 7 of the second byte need to be zero (‘0’)!

System Status Service

Request the internal system state of the device.

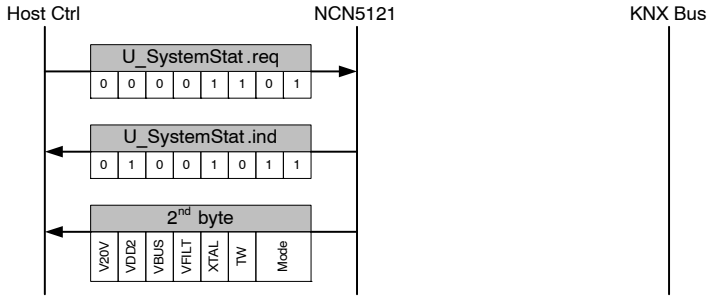

Figure 38. System State Service

V20V: '1' if V20V linear voltage regulator is within normal operating range
VDD2: '1' if DC2 regulator is within normal operating range
VBUS: '1' if KNX bus voltage is within normal operating range
VFILT: '1' if voltage on tank capacitor is within normal operating range State Service
XTAL: '1' if crystal oscillator frequency is within normal operating range
TW: '1' if thermal warning condition is present (can also be verified with U_State.ind service (see State Service, p36)
Mode: Operation mode (see also Digital State Diagram, p31).

Bit		
1	**0**	**Mode**
0	0	Power−Up
0	1	Sync
1	0	Stop
1	1	Normal

Note: SAVEB−pin is low if any of bits 3 to 7 is '0' (zero) or bit 2 is '1'.

Stop Mode Service

Go to Stop State. A confirmation is sent to indicate that device has switched to the Stop State. See also Digital State Diagram, p31

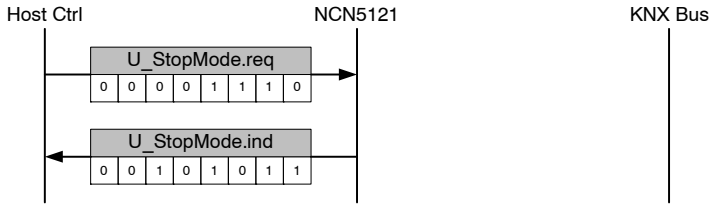

Figure 39. Stop Mode Service

Exit Stop Mode Service

Request transition from Stop to Sync State. An acknowledge service is send later to confirm that device has switched from Sync to Normal State. See also Digital State Diagram, p31.

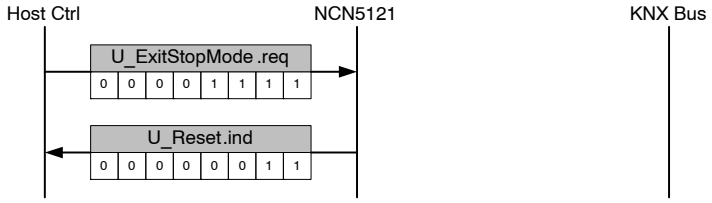

Figure 40. Exit Stop Mode Service

Configure Service

Activate additional features (which are disabled after reset).

U_Configure.ind service is send back to the host controller at the exact moment when the new features get activated. This is done during bus idle or outside the Normal State. It confirms the execution of the request service.

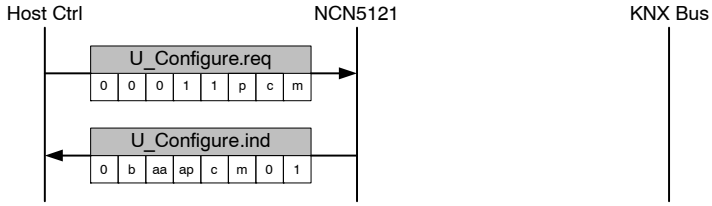

Figure 41. Configure Service

p (auto polling):	when active, NCN5121 automatically fills in corresponding poll slot of polling telegrams. Host controller is responsible to provide appropriate polling information with the U_PollingState.req service (See Slave Polling Frame Service and Master Polling Frame Service, p54 and 55).
c (CRC−CCITT):	when active, NCN5121 accompanies every received frame with a 2−byte CRC−CCITT value. CRC−CCITT is also known as CRC−16−CCITT.
m (frame end with MARKER):	End of received frames is normally reported with a silence of 2.6 ms on the Tx line to the host controller. With this feature active, NCN5121 marks end of frame with U_FrameEnd.ind + U_FrameState.ind services (See Send Frame Service and Receive Frame Service, p42 and 51).
b:	‘1’ if busy mode is active. Can be enabled with U_SetBusy.req (see Set Busy Service, p36) and disabled with U_QuitBusy.req service (see Quit Busy Service, p36) or U_Ackn.req service (see Receive Frame Service, p51).
aa:	‘1’ if auto−acknowledge feature is active. Can be enabled with U_SetAddress.req service (see Set Address Service, p37).
ap (auto−polling):	‘1’ if auto−polling feature is active. This feature can be enabled with U_Configure.req service.
c (CRC−CCITT):	‘1’ if CRC−CCITT feature is active. See p57 for info on CRC−CCITT. This feature can be enabled with U_Configure.req service.
m (frame end with MARKER):	‘1’ when feature is active. This feature can be enabled with U_Configure.req service.

Remark:

Activation of the additional features is done by setting the corresponding bit to ‘1’. Setting the bit to ‘0’ (zero) has no effect (will not deactivate feature). Features can only be deactivated by a reset. Set all bits (m, c and p) to ‘0‘ (zero) to poll the current configuration status.

Internal Register Write Service

Write a byte to an internal device−specific register (see *Internal Device−Specific Registers*, p58). The address of the register is specified in the request. The data to be written is transmitted after the request.

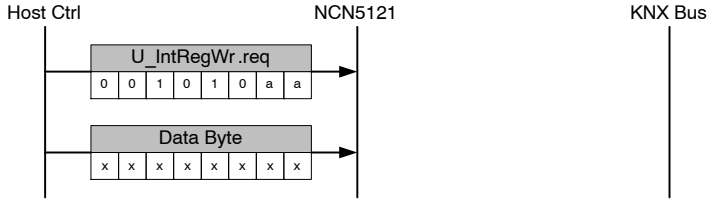

Figure 42. Internal Register Write Service

aa: address of the internal register

Remarks:

- x = don't care (in line with *Internal Device−Specific Registers*, p58).
- Internal Register Write is not synchronized with other services. One should only use this service when all previous services are ended. When using communication over SPI, it is recommended to go to stop mode when performing a register write. When communicating over UART, this is not required.

Internal Register Read Service

Read a byte from an internal device−specific register (see *Internal Device−Specific Registers*, p58). The address of the register is specified in the request. The next byte returns the data of the addressed register.

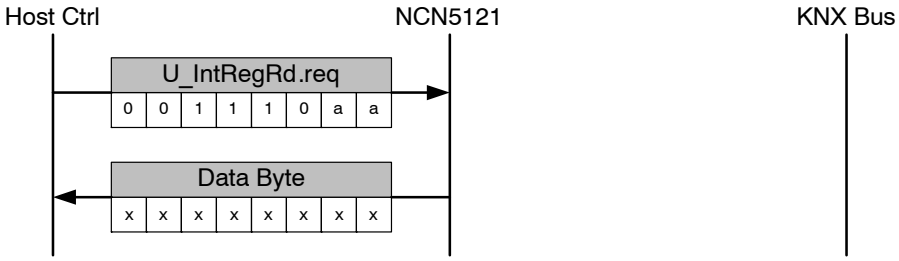

Figure 43. Internal Register Read Service

aa: address of the internal register

Remarks:

- x = don't care (in line with *Internal Device−Specific Registers*, p58).
- It's advised to only use this service in Stop, Power−Up Stop or Power−Up State. In the other state erroneous behavior could occur.
- Internal Register Read is not synchronized with other services. One should only use this service when all previous services are ended. When using communication over SPI or UART, it is recommended to go to stop mode when performing a register write.

Send Frame Service

Send data over the KNX bus.

The U_L_DataStart.req is used to start transmission of a new frame. The byte following this request is the control byte of the KNX telegram.

The different bytes following the control byte are assembled by using U_L_DataCont.req. The byte following U_L_DataCont.req is the data byte of the KNX telegram. U_L_DataCont.req contains the index which specifies the position of the data byte inside the KNX telegram. It's allowed to transmit bytes in random order and even overwrite bytes (= write several times into the same index). It's up to the host controller to correctly populate all data bytes of the KNX telegram.

U_L_DataEnd.req is used to finalize the frame and start the KNX transfer. The byte following U_L_DataEnd.req is the checksum of the KNX telegram. If the checksum received by the device corresponds to the calculated checksum, the device

starts the transmission on the KNX bus. If not, the device returns U_State.ind message to the host controller with Receive Error flag set (see *State Service* p36 for U_State.ind).

U_L_DataStart/DataCont/DataEnd only provides space for 6 index bits. Because an extended frame can consist out of 263 bytes, an index of 9 bits long is needed. U_DataOffset.req provides the 3 most significant bits of the data byte index. The value is stored internally until a new offset is provided with another call.

Each transmitted data octet on the KNX bus will also be transmitted back to the host controller.

Each transmission is ended with a L_Data.con service where the MSB indicates if an acknowledgment was received or not. When operating in SPI or UART 8−bit Mode, L_Data.con is preceded with U_FrameState.ind.

Depending on the activated features, a CRC−CCITT service and/or a MARKER could be included.

Next figures give different examples of send frames.

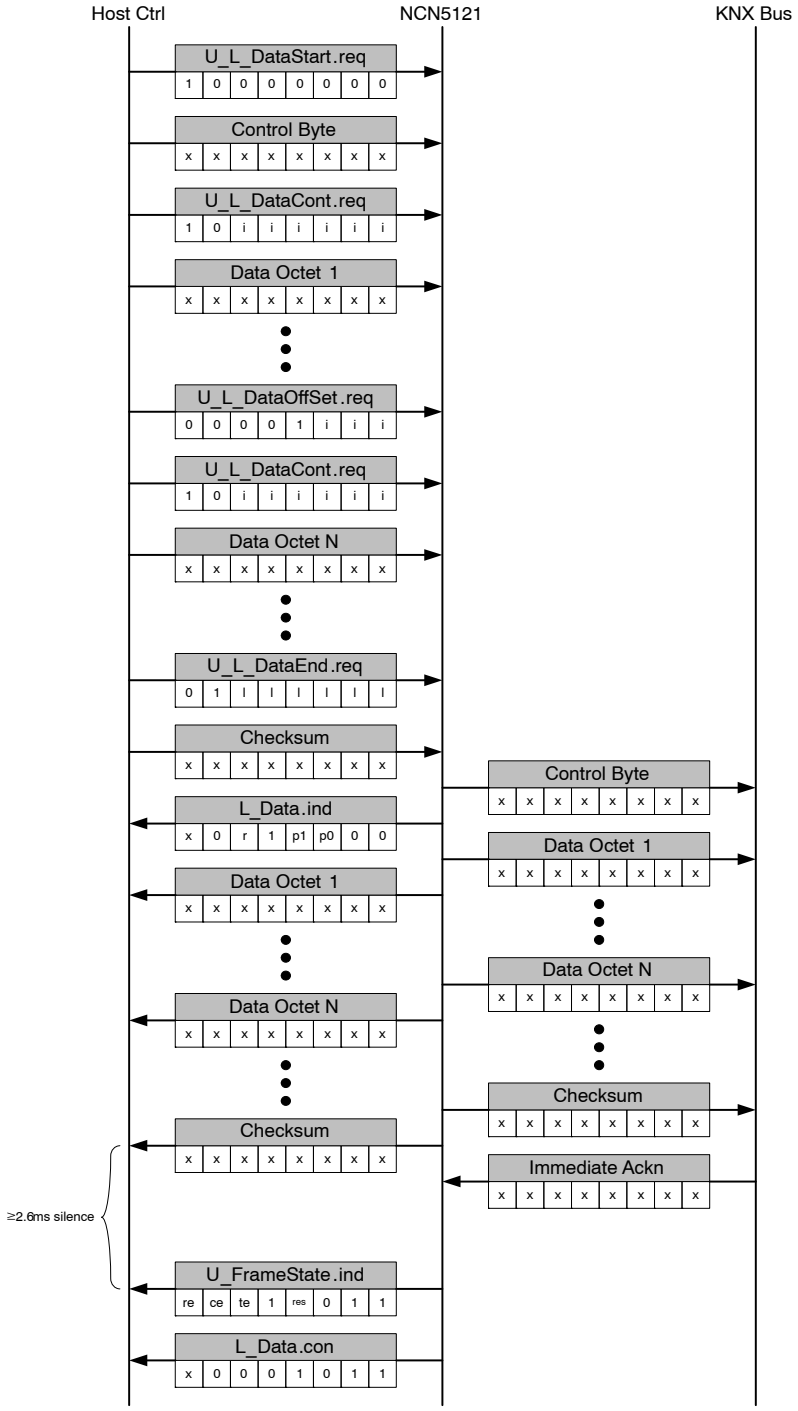

Figure 44. Send Frame, SPI or 8−bit UART Mode, Frame End with Silence, No CRC−CCITT

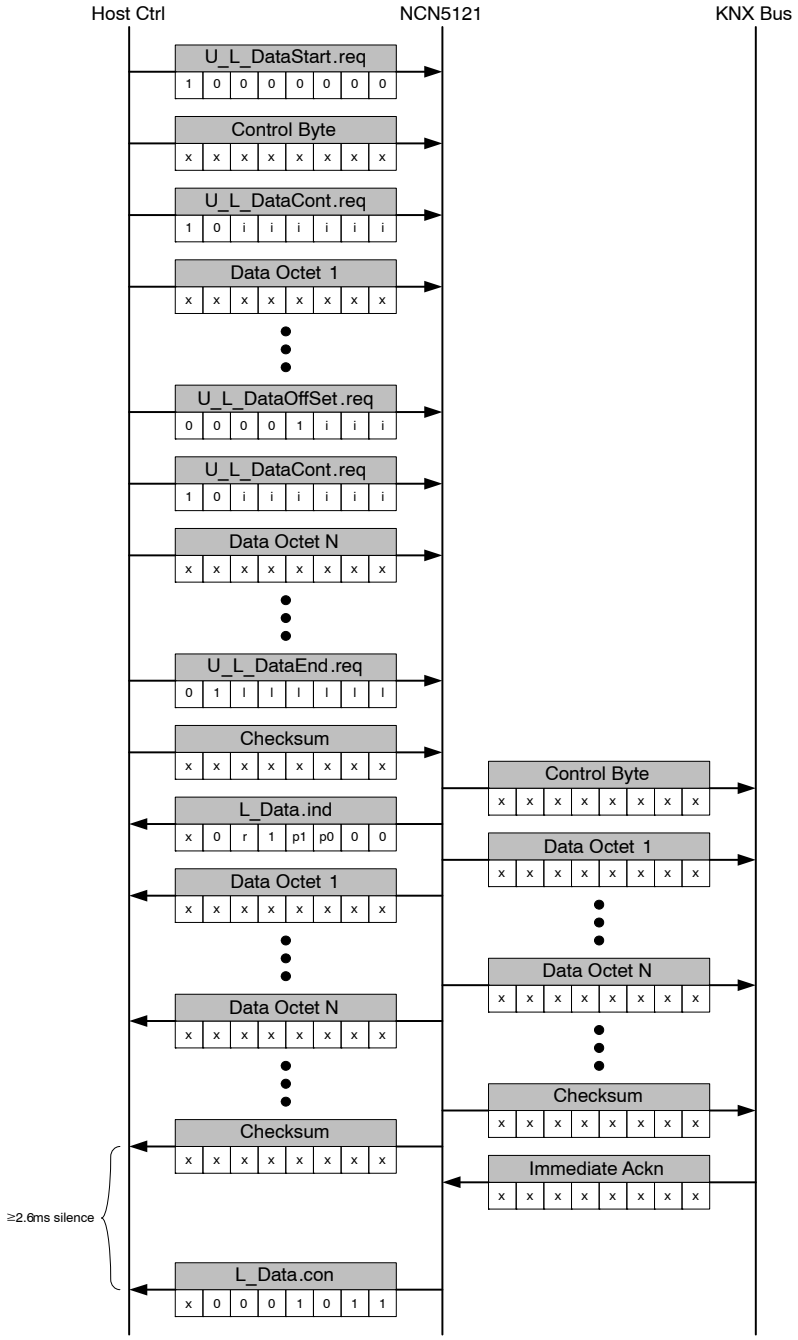

Figure 45. Send Frame, 9−bit UART Mode, Frame End with Silence, No CRC−CCITT

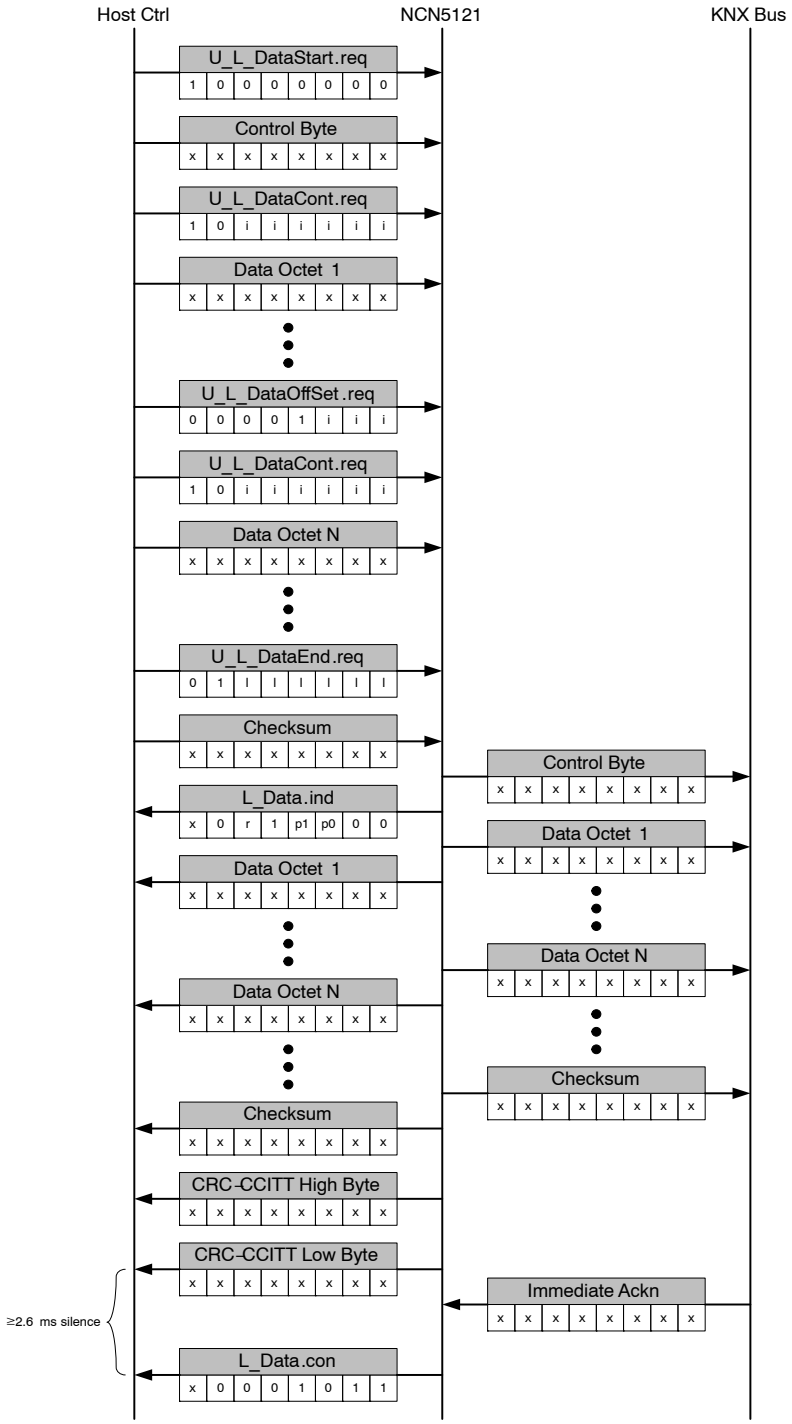

Figure 46. Send Frame, 9−bit UART Mode, Frame End with Silence, with CRC−CCITT

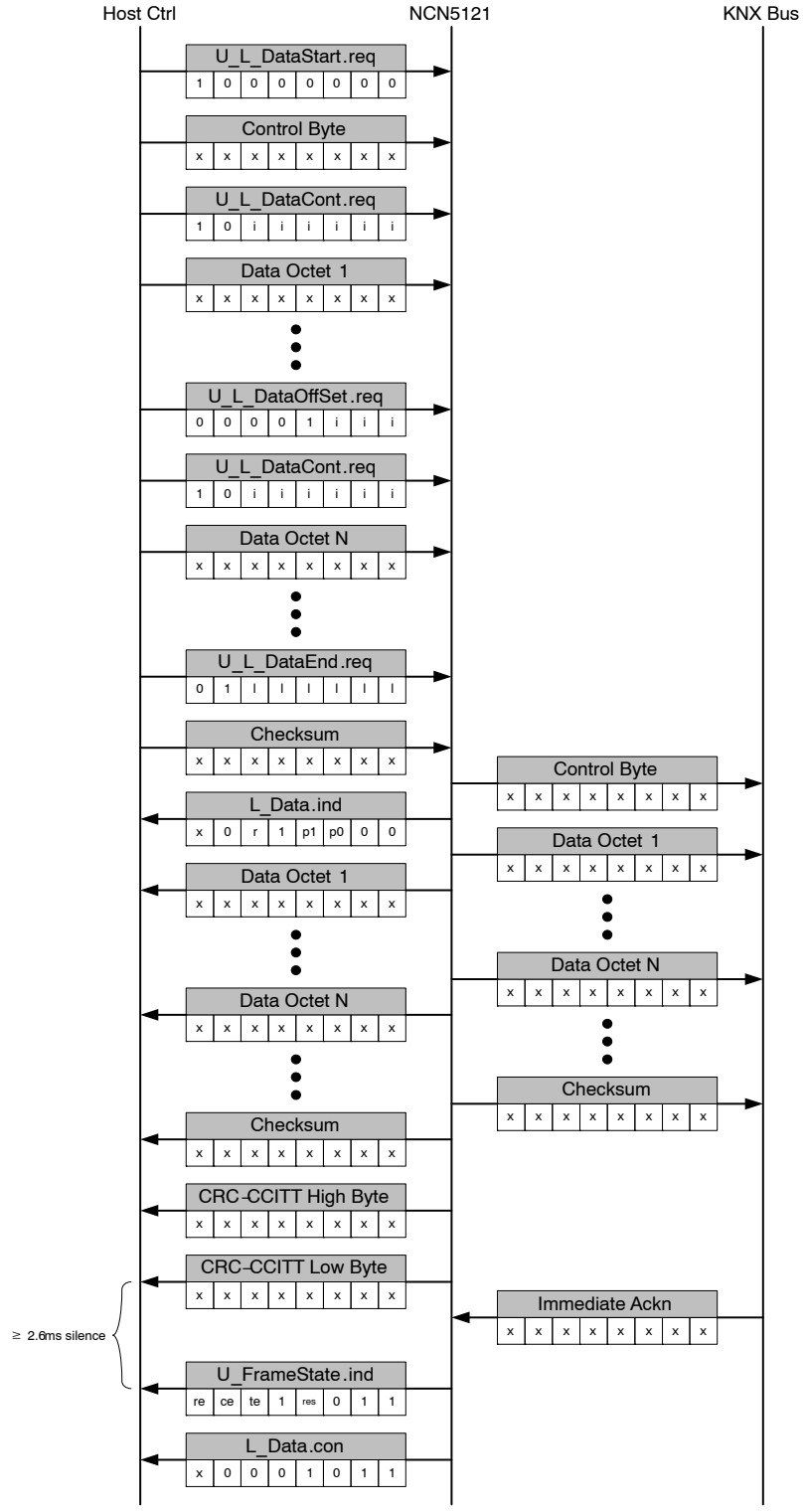

Figure 47. Send Frame, SPI or 8−bit UART Mode, Frame End with Silence, with CRC−CCITT

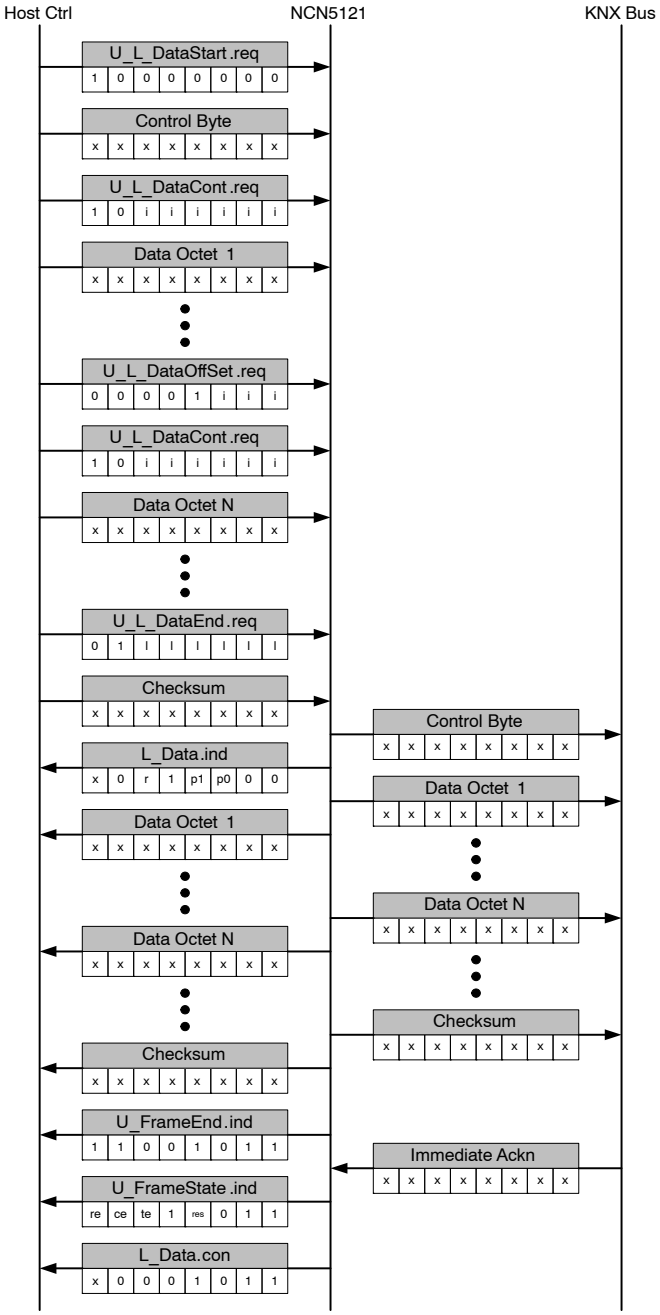

Figure 48. Send Frame, All Modes, Frame End with MARKER, No CRC−CCITT

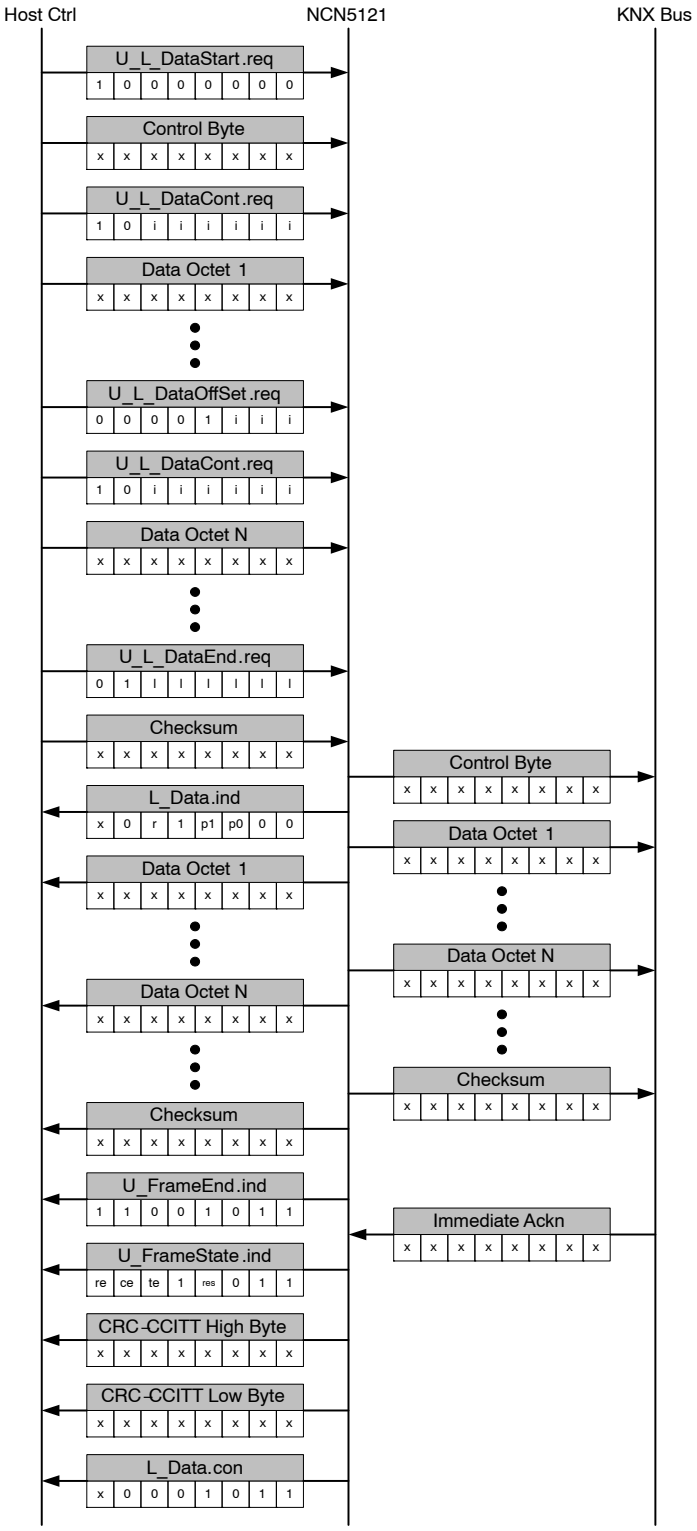

Figure 49. Send Frame, All Modes, Frame End with MARKER and with CRC−CCITT

re (receive error):	‘1’ if newly received frame contained corrupted bytes (wrong parity, wrong stop bit or incorrect bit timings)
ce (checksum or length error):	‘1’ if newly received frame contained wrong checksum or length which does not correspond to the number of received bytes
te (timing error):	‘1’ if newly received frame contained bytes whose timings do not comply with the KNX standard
res (reserved):	Reserved for future use (will be ‘0’).

Remarks:
- If the repeat flag is not set (see Set Repetition Service p39), the device will only perform one attempt to send the KNX telegram.
- Sending of the KNX telegram over the KNX bus is only started after all data bytes are received and the telegram is assembled.
- When starting transmission of a new frame with U_L_DataStart.req, the device automatically resets the internal offset of the data index to zero.
- Data offsets of 5, 6 and 7 are forbidden (U_L_DataOffset.req)!

Remarks on Figures 44 to 49:
- x = don‘t care (in respect with KNX standard)
- See Tables 12 and 13 for more details on all the bits
- Code of U_FrameEnd.ind (0xCB) can also be part of the KNX frame content (Data Octet). When NCN5121 transmits the data octet (0xCB) on the KNX bus, 2 bytes (2 times 0xCB) will be transmitted back to the host controller to make it possible for the host controller to distinguish between a data octet (0xCB) and U_FrameEnd.ind. This remark is only valid if frame end with MARKER is enabled.
- See p57 for info on CRC−CCITT.

Receive Frame Service

Receive data over the KNX bus.

Upon reception from the control byte, the control byte is checked by the device. If correct, the control byte is transmitted back to the host (L_Data_Standard.ind or L_Data_Extended.ind depending if standard or extended frame type is received). After the control byte, all data bytes are transparently transmitted back to the host controller. Handling of this data is a task for the Data Link Layer which should be implemented in the host controller.

The host controller can indicate if the device is addressed by setting the NACK, BUSY or ACK flag (U_Ackn.req).

When working in SPI or 8−bit UART Mode, each frame is ended with an U_FrameState.ind. Depending on the activated features, a CRC−CCITT or MARKER could be added to the complete frame.

Below figures give different examples of receive frames.

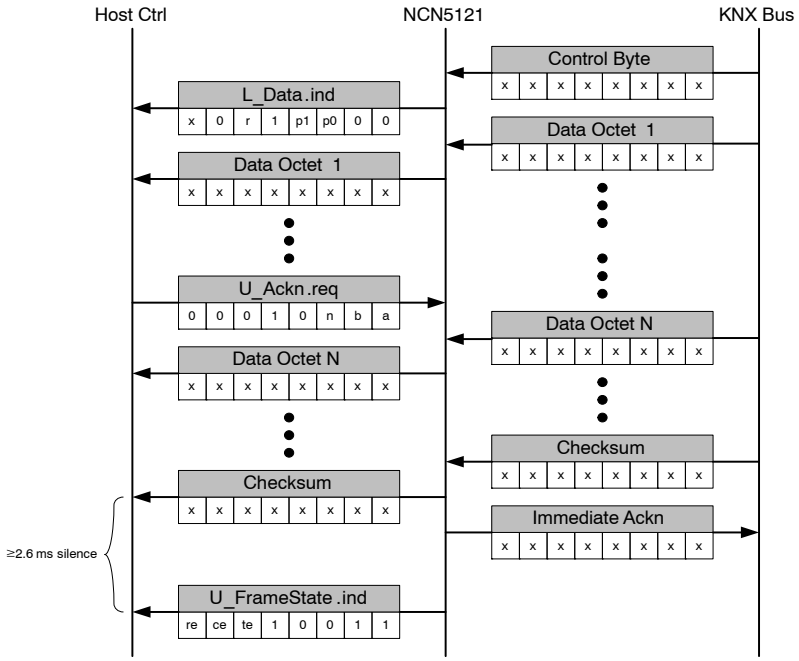

Figure 50. Receive Frame, SPI or 8−bit UART Mode, Frame End with Silence, No CRC−CCITT

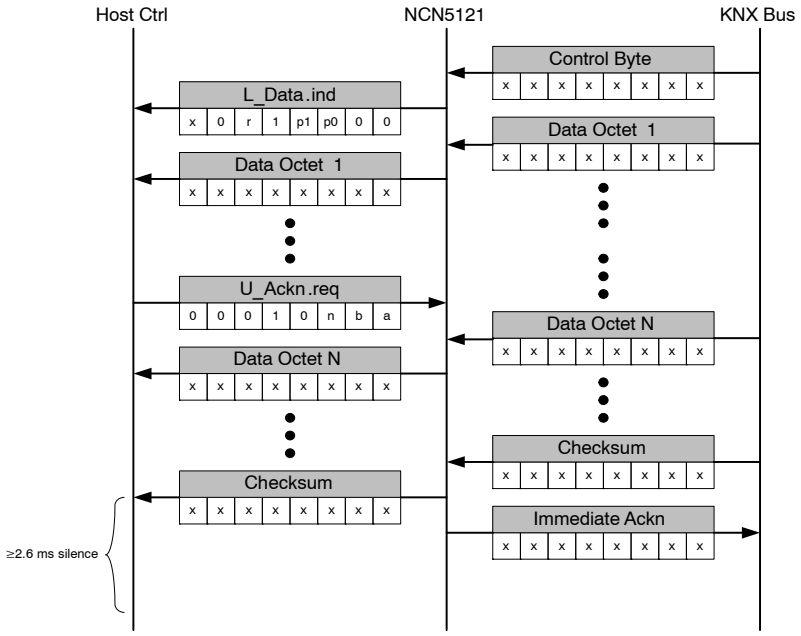

Figure 51. Receive Frame, 9−bit UART Mode, Frame End with Silence, No CRC−CCITT

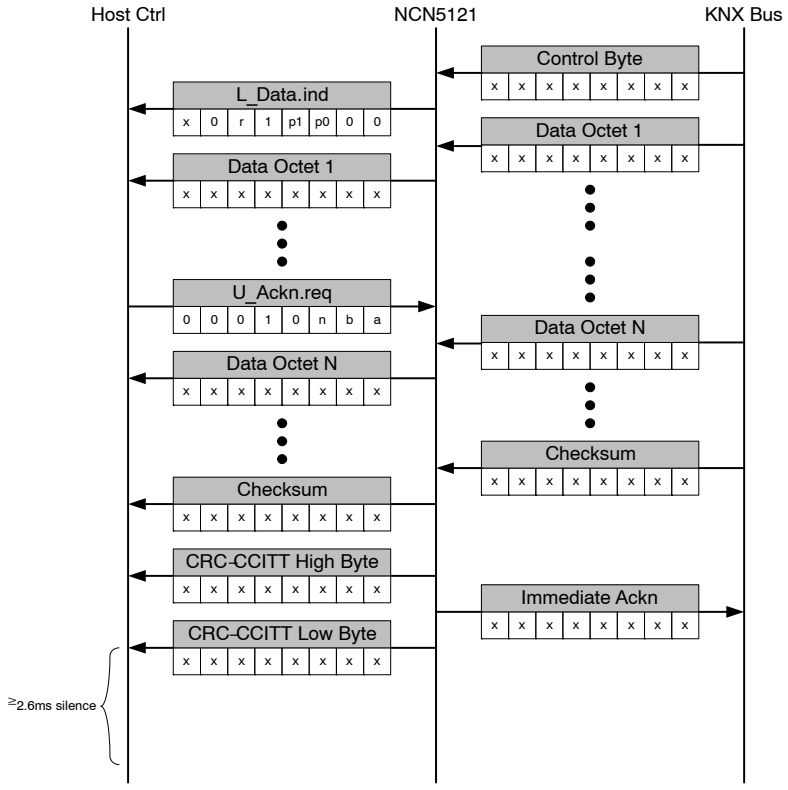

Figure 52. Receive Frame, 9−bit UART Mode, Frame End with Silence, with CRC−CCITT

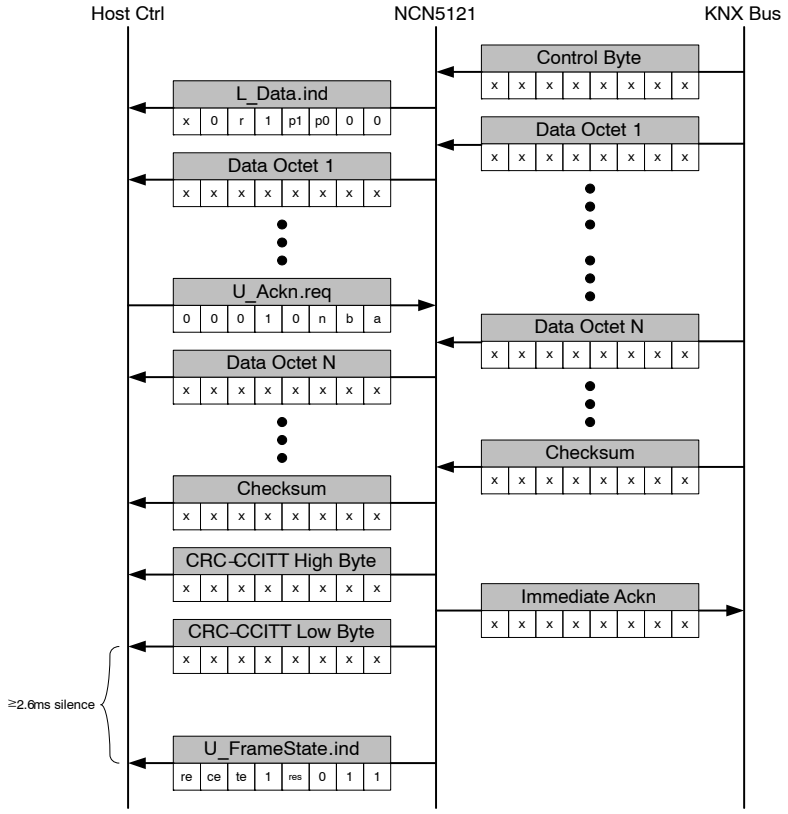

Figure 53. Receive Frame, SPI or 8−bit UART Mode, Frame End with Silence, with CRC−CCITT

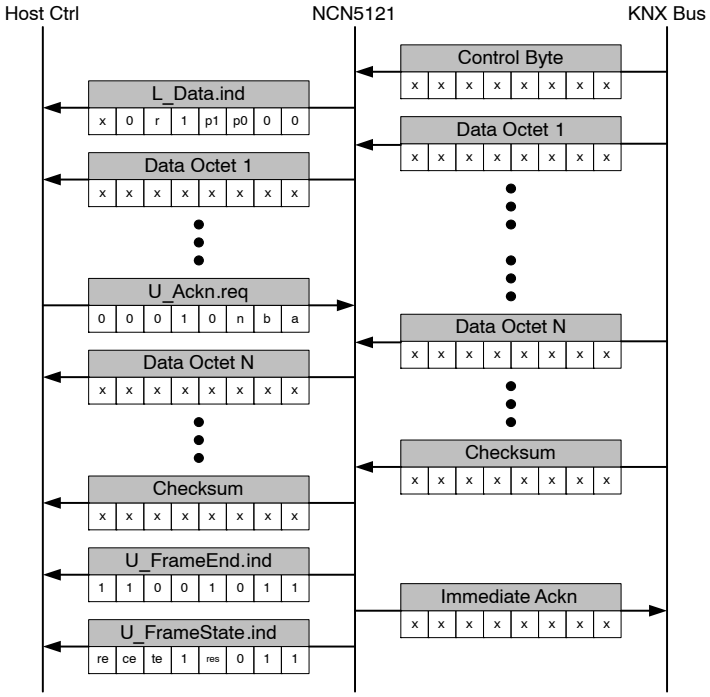

Figure 54. Receive Frame, All Modes, Frame End with MARKER, No CRC−CCITT

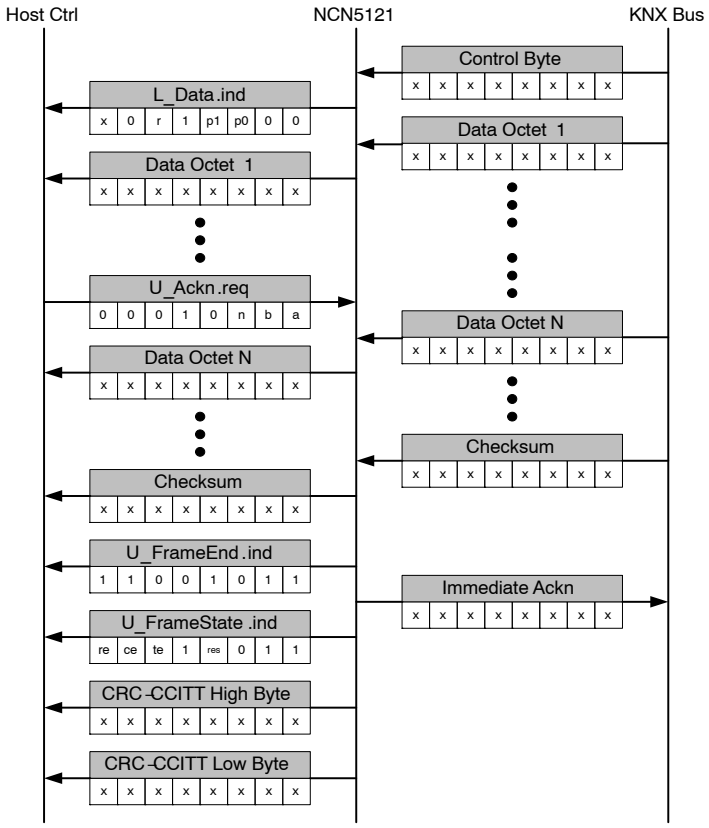

Figure 55. Receive Frame, All Modes, Frame End with MARKER, with CRC−CCITT

re (receive error): ‘1’ if newly received frame contained corrupted bytes (wrong parity, wrong stop bit or incorrect bit timings)

ce (checksum or length error): ‘1’ if newly received frame contained wrong checksum or length which does not correspond to the number of received bytes

te (timing error) : ‘1’ if newly received frame contained bytes whose timings do not comply with the KNX standard

res (reserved) : Reserved for future use (will be ‘0’).

Remarks on Figures 50 to 55:

- x = don‘t care (in respect with KNX standard)
- See Tables 12 and 13 for more details on all the bits
- Code of U_FrameEnd.ind (0xCB) can also be part of the KNX frame content (Data Octet). To make a distinguish between a data octet and U_FrameEnd.ind, NCN5121 duplicates the data content (if 0xCB). This will result in 2 bytes transmitted to the host controller (two times 0xCB) corresponding to 1 byte received on the KNX bus. Above is only valid if frame end with MARKER is enabled.
- See p57 for info on CRC−CCITT.

Slave Polling Frame Service

Upon reception and consistency check of the polling control byte, the control byte is send back to the host controller (L_Poll_Data.ind). The host controller will send the slot number to the device (U_PollingState.req), followed by the polling address and the polling state. At the same time the source address, polling address, slot count and checksum is received over the KNX bus. If the polling address received from the KNX bus is equal to the polling address received from the host controller, NCN5121 will send the polling data in the slot as define by U_PollingState.req (only if the slotcount is higher as the define slot).

U_PollingState.req can be sent at any time (not only during a transmission of a polling telegram). The information is stored internally in NCN5121 and can be reused for further polling telegrams if auto−polling function gets activated.

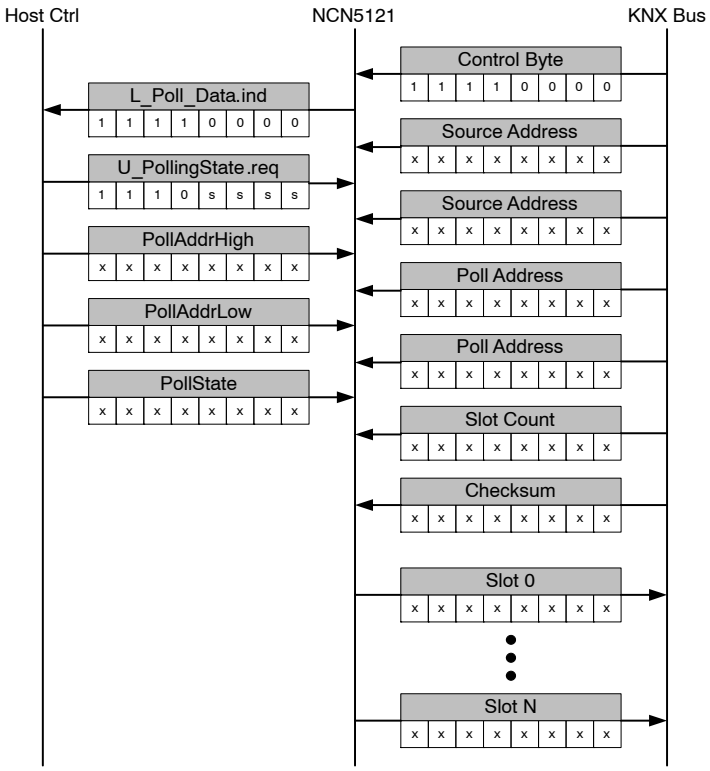

Figure 56. Slave Polling Frame Service

Remarks:

x = don't care (in respect with KNX standard)
ssss = slot number

Master Polling Frame Service

When NCN5121 receives the polling frame from the host controller, the polling frame will be transmitted over the KNX bus.

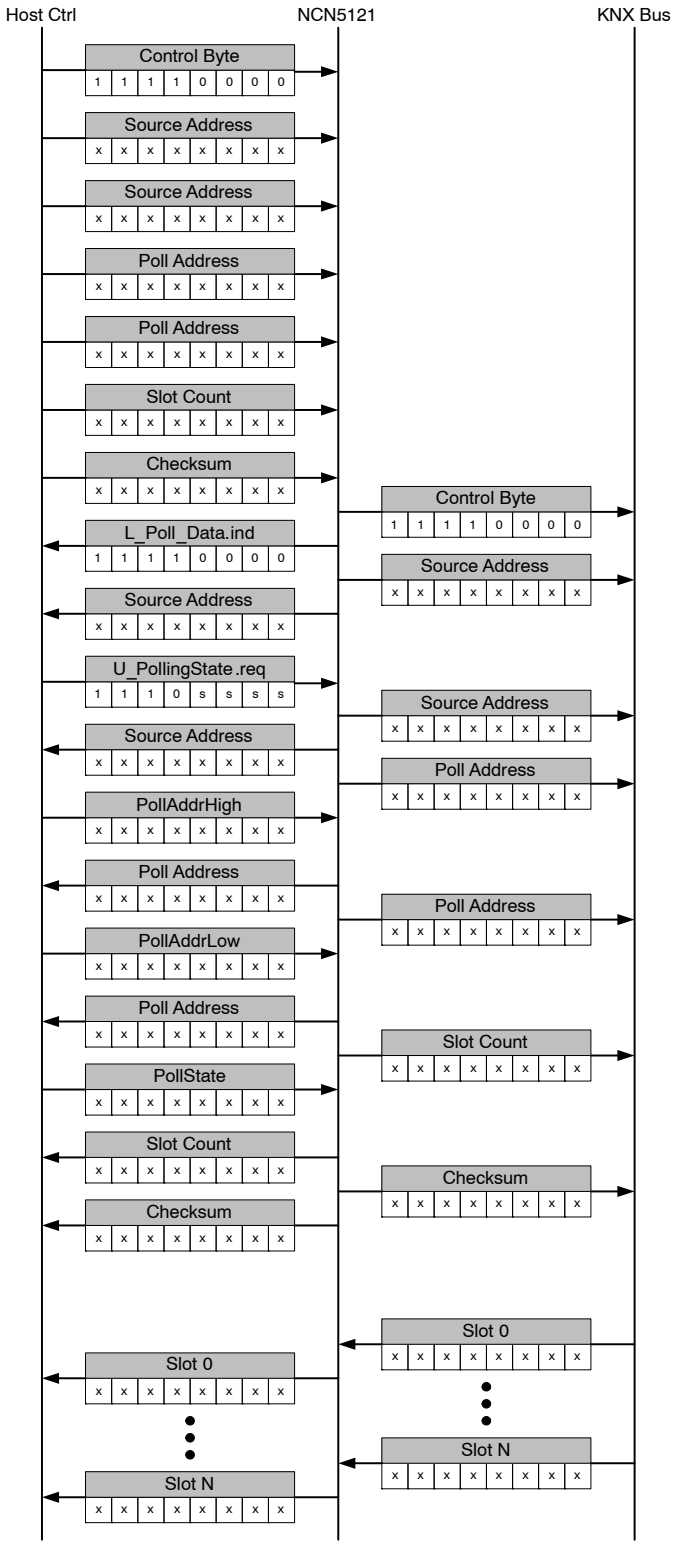

Figure 57. Master Polling Frame Service

Remarks:

x = don‘t care (in respect with KNX standard)
ssss = slot number

CRC−CCITT

CRC order − 16 bit
CRC polynom (hex) − 1021
Initial value (hex) − FFFF
Final XOR value (hex) − 0
No reverse on output CRC

Test string „123456789“ is 29B1h

CRC−CCITT value over a buffer of bytes can be calculated with following code fragment in C, where
pBuf is pointer to the start of frame buffer
uLength is the frame length in bytes

```
unsigned short calc_CRC_CCITT(unsigned char* pBuf, unsigned short uLength)
{
	unsigned short u_crc_ccitt;
	for (u_crc_ccitt = 0xFFFF; uLength−−; p++)
	{
		u_crc_ccitt = get_CRC_CCITT(u_crc_ccitt, *p);
	}
	return u_crc_ccitt;
}

unsigned short get_CRC_CCITT(unsigned short u_crc_val, unsigned char btVal)
{
	u_crc_val = ((unsigned char)(u_crc_val >> 8)) | (u_crc_val << 8);
	u_crc_val ^= btVal;
	u_crc_val ^= ((unsigned char)(u_crc_val & 0xFF)) >> 4;
	u_crc_val ^= u_crc_val << 12;
	u_crc_val ^= (u_crc_val & 0xFF) << 5;
	return u_crc_val;
}
```

Internal Device−Specific Registers

In total 4 device-specific register are available:

- Watchdog Register (0x00)
- Analog Control Register 0 (0x01)
- Analog Control Register 1 (0x02)
- Analog Status Register 0 (0x03)
- Revision ID Register (0x05)

Watchdog Register

The Watchdog Register is located at address 0x00 and can be used to enable the watchdog and set the watchdog time.

Table 14. WATCHDOG REGISTER

ExtWatchdogCtrl (ExtWR)									
Address		**Bit 7**	**Bit 6**	**Bit 5**	**Bit 4**	**Bit 3**	**Bit 2**	**Bit 1**	**Bit 0**
0x00	**Access**	R/W	R/W	R/W	R/W	R/W	R/W	R/W	R/W
	Reset	0	0	0	0	1	1	1	1
	Data	WDEN	-	-	-	WDT			

Table 15. WATCHDOG REGISTER PARAMETERS

Parameter	Value		Description	Info
WDEN	0	Disable	Enables/disables the watchdog	p23
	1	Enable		
WDT	0000	33 ms	Defines the watchdog time. The watchdog needs to be re-enabled (WDEN) within this time or a watchdog event will be triggered.	
	0001	66 ms		
	0010	98 ms		
	0011	131 ms		
	0100	164 ms		
	0101	197 ms		
	0110	229 ms		
	0111	262 ms		
	1000	295 ms		
	1001	328 ms		
	1010	360 ms		
	1011	393 ms		
	1100	426 ms		
	1101	459 ms		
	1110	492 ms		
	1111	524 ms		

Remark: Bit 4 … 6 are reserved.

Analog Control Register 0

The Analog Control Register 0 is located at address 0x01 and can be used to disable the V20V and the DC2 regulator, to disable the XCLK-pin, to enable the transmit trigger signal and to set the 20 V LDO current limit.

Table 16. ANALOG CONTROL REGISTER 0

Analog Control Register 0 (AnaCtrl0)									
Address		**Bit 7**	**Bit 6**	**Bit 5**	**Bit 4**	**Bit 3**	**Bit 2**	**Bit 1**	**Bit 0**
0x01	**Access**	R/W	R/W	R/W	R/W	R/W	R/W	R/W	R/W
	Reset	0	1	1	1	0	1	0	0
	Data	–	V20VEN	DC2EN	XCLKEN	TRIGEN	V20VCLIMIT		

Table 17. ANALOG CONTROL REGISTER 0 PARAMETERS

Parameter	Value		Description	Info
V20VEN	0	Disable	Enables/disables the V20V regulator	p 19
	1	Enable		
DC2EN	0	Disable	Enables/disables the DC2 converter	p 19
	1	Enable		
XCLKEN	0	Disable	Enables/disables the XCLK output signal	p 19
	1	Enable		
TRIGEN	0	Disable	TRIG/ARXD pin outputs the Tx activity monitor signal when enabled. When disabled the TRIG/ARXD pin is tri−state.	p 19
	1	Enable		
V20VCLIMIT	000 − 111		Adjustment of the V20V current limit as configured by R_6 by $\Delta I_{20V, STEP}$ per bit	p 19

Remark: Bit 7 is reserved.

Analog Control Register 1

The Analog Control Register 1 is located at address 0x02 and can be used to configure the voltage monitors.

Table 18. ANALOG CONTROL REGISTER 1

Analog Control Register 1 (AnaCtrl1)									
Address		**Bit 7**	**Bit 6**	**Bit 5**	**Bit 4**	**Bit 3**	**Bit 2**	**Bit 1**	**Bit 0**
0x02	**Access**	R/W	R/W	R/W	R/W	R/W	R/W	R/W	R/W
	Reset	0	1	1	0	0	0	0	0
	Data	–	V20V_OK_M	VDD2_OK_M	VFILT_OK_M	ANAOUTCTRL			-

Table 19. ANALOG CONTROL REGISTER 1 PARAMETERS

Parameter	Value		Description	Info
V20V_OK_M	0	Enable	Enable to include the voltage monitor output in the SAVEB calculation.	p 19
	1	Disable		
VDD2_OK_M	0	Enable	Enable to include the voltage monitor output in the SAVEB calculation.	p 19
	1	Disable		
VFILT_OK_M	0	Enable	Enable to include the voltage monitor output in the SAVEB calculation.	p 18
	1	Disable		
ANAOUTCTRL	000	Disable	Analog output is disabled	p 24
	001	Enable	Analog output monitors VBUS1	
	010	Enable	Analog output monitors VFILT	
	011	Enable	Analog output monitors V20V	
	100	Enable	Analog output monitors VDD2	
	101	Enable	Analog output monitors VDDA	
	110	Enable	Analog output monitors Bus current	
	111	Enable	Analog output monitors Temperature	

Remark: Bit 0 and bit 7 are reserved.

Analog Status Register

The Analog Status Register is located at address 0x03 and can be used to verify the voltage monitors, Xtal and thermal status.

Table 20. ANALOG STATUS REGISTER

Analog Status Register (AnaStat)									
Address		**Bit 7**	**Bit 6**	**Bit 5**	**Bit 4**	**Bit 3**	**Bit 2**	**Bit 1**	**Bit 0**
0x03	**Access**	R	R	R	R	R	R	R	R
	Reset	0	0	0	0	0	0	0	0
	Data	–	V20V	VDD2	VBUS	VFILT	XTAL	TW	TSD

Table 21. ANALOG STATUS REGISTER PARAMETERS

Parameter	Value	Value	Description	Info
V20V	0	nOK	'1' if voltage on V20V-pin is above the V20V undervoltage level	p 19
	1	OK		
VDD2	0	nOK	'1' if voltage on VDD2-pin is above the VDD2 undervoltage level	p 19
	1	OK		
VBUS	0	nOK	'1' if bus voltage is above the VBUS undervoltage level	p 18
	1	OK		
VFILT	0	nOK	'1' if voltage on VFILT-pin is above the VFILT undervoltage level	p 18
	1	OK		
XTAL	0	nOK	'1' if XTAL is up and running	p 19
	1	OK		
TW	0	No TW	'1' if Thermal Warning detected	p 23
	1	TW		
TSD	0	No TSD	Contains information about the previous Thermal Shutdown situation	
	1	TSD		

Remark: Bit 7 is reserved.

Revision ID register

The Revision ID register is located at address 0x05 and can be read out to check the revision ID of the silicon and by the firmwire of the host controller to determine the part number of the transceiver

Table 22. REVISION ID REGISTER

Revision ID Register (RevID)									
Address		**Bit 7**	**Bit 6**	**Bit 5**	**Bit 4**	**Bit 3**	**Bit 2**	**Bit 1**	**Bit 0**
0x05	**Access**	R	R	R	R	R	R	R	R
	Reset	X	X	X	0	1	1	0	1
	Data	Revision			Part Number				

Table 23. REVISION ID REGISTER PARAMETERS

Parameter	Value	Value	Description	Info
Revision			Silicon revision ID	
Part Number	01101	NCN5121	Transceiver Part Number	

PACKAGE THERMAL CHARACTERISTICS

The NCN5121 is available in a QFN40 package. For cooling optimizations, the QFN40 has an exposed thermal pad which has to be soldered to the PCB ground plane. The ground plane needs thermal vias to conduct the heat to the bottom layer.

Figure 58 gives an example of good heat transfer. The exposed thermal pad is soldered directly on the top ground layer (left picture of Figure 58). It‘s advised to make the top ground layer as large as possible (see arrows Figure 58). To improve the heat transfer even more, the exposed thermal pad is connected to a bottom ground layer by using thermal vias (see right picture of Figure 58). It‘s advised to make this bottom ground layer as large as possible and with as less as possible interruptions.

For precise thermal cooling calculations the major thermal resistances of the device are given (Table 4). The thermal media to which the power of the devices has to be given are:

– Static environmental air (via the case)
– PCB board copper area (via the exposed pad)

The major thermal resistances of the device are the Rth from the junction to the ambient (Rth_{ja}) and the overall Rth from the junction to exposed pad (Rth_{jp}). In Table 4 one can find the values for the Rth_{ja} and Rth_{jp}, simulated according to JESD−51. The Rth_{ja} for 2S2P is simulated conform JEDEC JESD−51 as follows:

– A 4−layer printed circuit board with inner power planes and outer (top and bottom) signal layers is used
– Board thickness is 1.46 mm (FR4 PCB material)
– The 2 signal layers: 70 μm thick copper with an area of 5500 mm^2 copper and 20% conductivity
– The 2 power internal planes: 36 μm thick copper with an area of 5500 mm^2 copper and 90% conductivity

The Rth_{ja} for 1S0P is simulated conform to JEDEC JESD−51 as follows:

– A 1−layer printed circuit board with only 1 layer
– Board thickness is 1.46 mm (FR4 PCB material)
– The layer has a thickness of 70 μm copper with an area of 5500 mm^2 copper and 20% conductivity

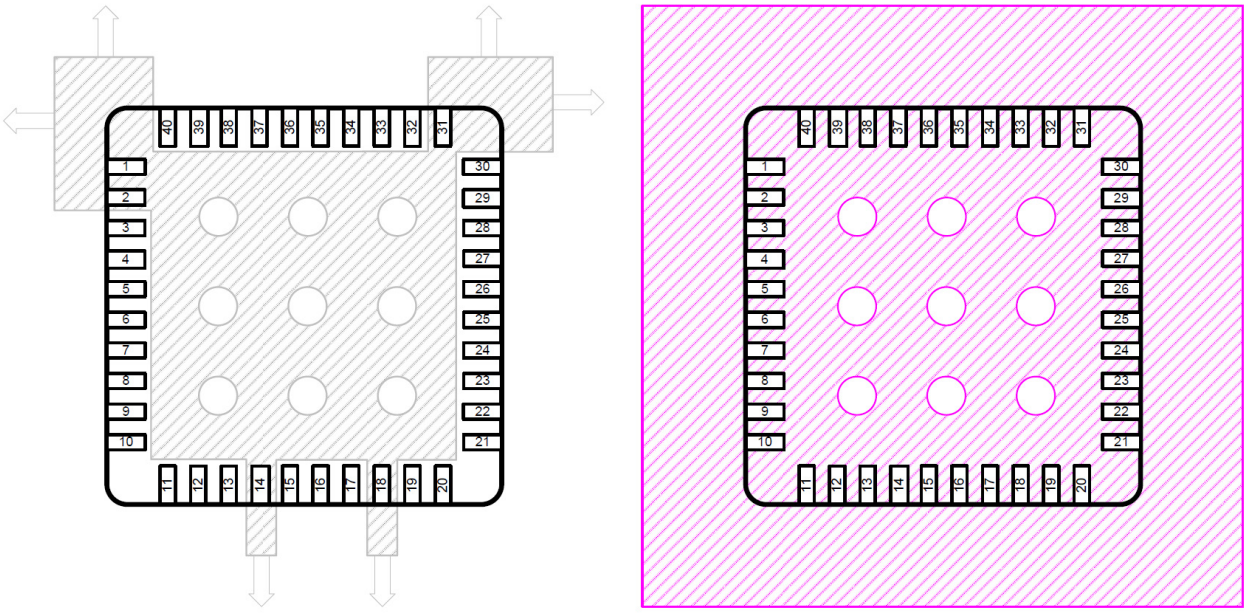

Figure 58. PCB Ground Plane Layout Condition (Left Picture Displays the Top Ground Layer, Right Picture Displays the Bottom Ground Layer)

ORDERING INFORMATION

Device Number	Temperature Range	Package	Shipping†
NCN5121MNTWG	−40°C to 105°C	QFN−40 (Pb−Free)	3000 / Tape & Reel

†For information on tape and reel specifications, including part orientation and tape sizes, please refer to our Tape and Reel Packaging Specifications Brochure, BRD8011/D.

KNX and the KNX Logos are trademarks of KNX Association.

MECHANICAL CASE OUTLINE
PACKAGE DIMENSIONS

ON Semiconductor®

QFN40 6x6, 0.5P
CASE 485AU−01
ISSUE O

DATE 01 JUL 2008

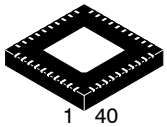

SCALE 2:1

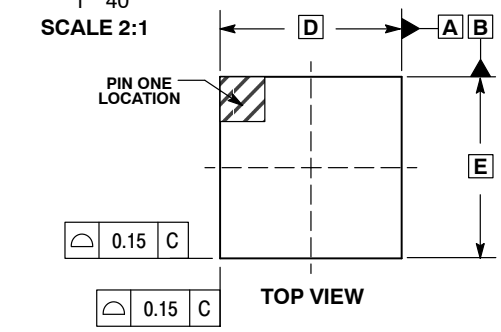

TOP VIEW

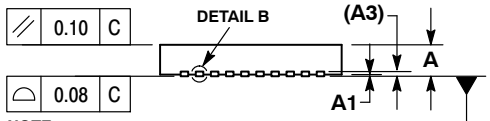

SIDE VIEW

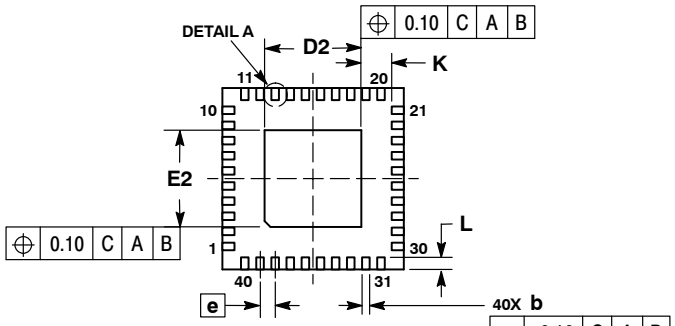

BOTTOM VIEW

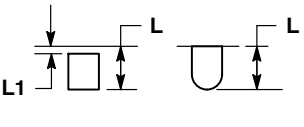

DETAIL A
OPTIONAL CONSTRUCTIONS

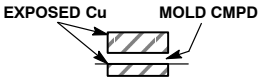

DETAIL B
OPTIONAL CONSTRUCTIONS

NOTES:
1. DIMENSIONING AND TOLERANCING PER ASME Y14.5M, 1994.
2. CONTROLLING DIMENSIONS: MILLIMETERS.
3. DIMENSION b APPLIES TO PLATED TERMINAL AND IS MEASURED BETWEEN 0.15 AND 0.30mm FROM TERMINAL TIP.
4. COPLANARITY APPLIES TO THE EXPOSED PAD AS WELL AS THE TERMINALS.

	MILLIMETERS	
DIM	MIN	MAX
A	0.80	1.00
A1	0.00	0.05
A3	0.20 REF	
b	0.18	0.30
D	6.00 BSC	
D2	3.10	3.30
E	6.00 BSC	
E2	3.10	3.30
e	0.50 BSC	
K	0.20 MIN	
L	0.30	0.50
L1	−−−	0.15

GENERIC MARKING DIAGRAM*



XXX = Specific Device Code
A = Assembly Location
WL = Wafer Lot
YY = Year
WW = Work Week
G = Pb−Free Package

*This information is generic. Please refer to device data sheet for actual part marking. Pb−Free indicator, “G” or microdot “ ▪”, may or may not be present.

SOLDERING FOOTPRINT*

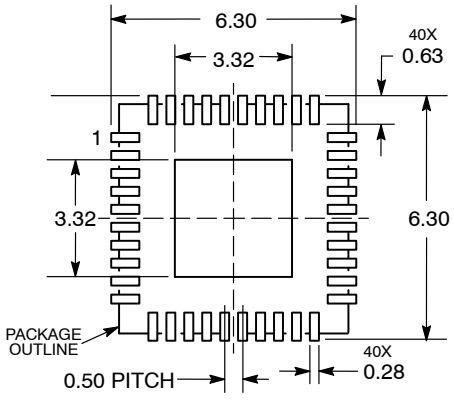

DIMENSIONS: MILLIMETERS

*For additional information on our Pb−Free strategy and soldering details, please download the ON Semiconductor Soldering and Mounting Techniques Reference Manual, SOLDERRM/D.

DOCUMENT NUMBER:	**98AON31154E**	Electronic versions are uncontrolled except when accessed directly from the Document Repository. Printed versions are uncontrolled except when stamped “CONTROLLED COPY” in red.
DESCRIPTION:	**QFN40, 6x6, 0.5P**	**PAGE 1 OF 1**

ON Semiconductor and ON are trademarks of Semiconductor Components Industries, LLC dba ON Semiconductor or its subsidiaries in the United States and/or other countries. ON Semiconductor reserves the right to make changes without further notice to any products herein. ON Semiconductor makes no warranty, representation or guarantee regarding the suitability of its products for any particular purpose, nor does ON Semiconductor assume any liability arising out of the application or use of any product or circuit, and specifically disclaims any and all liability, including without limitation special, consequential or incidental damages. ON Semiconductor does not convey any license under its patent rights nor the rights of others.

© Semiconductor Components Industries, LLC, 2019

onsemi, , and other names, marks, and brands are registered and/or common law trademarks of Semiconductor Components Industries, LLC dba "**onsemi**" or its affiliates and/or subsidiaries in the United States and/or other countries. **onsemi** owns the rights to a number of patents, trademarks, copyrights, trade secrets, and other intellectual property. A listing of **onsemi**'s product/patent coverage may be accessed at www.onsemi.com/site/pdf/Patent−Marking.pdf. **onsemi** reserves the right to make changes at any time to any products or information herein, without notice. The information herein is provided "as−is" and **onsemi** makes no warranty, representation or guarantee regarding the accuracy of the information, product features, availability, functionality, or suitability of its products for any particular purpose, nor does **onsemi** assume any liability arising out of the application or use of any product or circuit, and specifically disclaims any and all liability, including without limitation special, consequential or incidental damages. Buyer is responsible for its products and applications using **onsemi** products, including compliance with all laws, regulations and safety requirements or standards, regardless of any support or applications information provided by **onsemi**. "Typical" parameters which may be provided in **onsemi** data sheets and/or specifications can and do vary in different applications and actual performance may vary over time. All operating parameters, including "Typicals" must be validated for each customer application by customer's technical experts. **onsemi** does not convey any license under any of its intellectual property rights nor the rights of others. **onsemi** products are not designed, intended, or authorized for use as a critical component in life support systems or any FDA Class 3 medical devices or medical devices with a same or similar classification in a foreign jurisdiction or any devices intended for implantation in the human body. Should Buyer purchase or use **onsemi** products for any such unintended or unauthorized application, Buyer shall indemnify and hold **onsemi** and its officers, employees, subsidiaries, affiliates, and distributors harmless against all claims, costs, damages, and expenses, and reasonable attorney fees arising out of, directly or indirectly, any claim of personal injury or death associated with such unintended or unauthorized use, even if such claim alleges that **onsemi** was negligent regarding the design or manufacture of the part. **onsemi** is an Equal Opportunity/Affirmative Action Employer. This literature is subject to all applicable copyright laws and is not for resale in any manner.

ADDITIONAL INFORMATION

TECHNICAL PUBLICATIONS:
Technical Library: www.onsemi.com/design/resources/technical−documentation
onsemi Website: www.onsemi.com

ONLINE SUPPORT: www.onsemi.com/support
For additional information, please contact your local Sales Representative at www.onsemi.com/support/sales