Self-Supplied Monolithic Switcher for Low Standby-Power Offline SMPS

NCP1010, NCP1011, NCP1012, NCP1013, NCP1014

DISCONTINUED
THIS DEVICE IS NOT RECOMMENDED FOR NEW DESIGN
PLEASE CONTACT YOUR onsemi
REPRESENTATIVE FOR INFORMATION

The NCP101X series integrates a fixed−frequency current−mode controller and a 700 V MOSFET. Housed in a PDIP−7 or SOT−223 package, the NCP101X offers everything needed to build a rugged and low−cost power supply, including soft−start, frequency jittering, short−circuit protection, skip−cycle, a maximum peak current setpoint and a Dynamic Self−Supply (no need for an auxiliary winding).

Unlike other monolithic solutions, the NCP101X is quiet by nature: during nominal load operation, the part switches at one of the available frequencies (65 − 100 − 130 kHz). When the current setpoint falls below a given value, e.g. the output power demand diminishes, the IC automatically enters the so−called skip−cycle mode and provides excellent efficiency at light loads. Because this occurs at typically 1/4 of the maximum peak value, no acoustic noise takes place. As a result, standby power is reduced to the minimum without acoustic noise generation.

Short−circuit detection takes place when the feedback signal fades away, e.g. in true short−circuit conditions or in broken Optocoupler cases. External disabling is easily done either simply by pulling the feedback pin down or latching it to ground through an inexpensive SCR for complete latched−off. Finally soft−start and frequency jittering further ease the designer task to quickly develop low−cost and robust offline power supplies.

For improved standby performance, the connection of an auxiliary winding stops the DSS operation and helps to consume less than 100 mW at high line. In this mode, a built−in latched overvoltage protection prevents from lethal voltage runaways in case the Optocoupler would brake. These devices are available in economical 8−pin dual−in−line and 4−pin SOT−223 packages.

MARKING DIAGRAMS

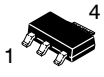

SOT−223
CASE 318E
ST SUFFIX

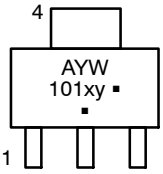

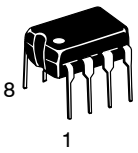

PDIP−7
CASE 626A
AP SUFFIX

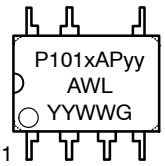

x = Current Limit (0, 1, 2, 3, 4)
y = Oscillator Frequency
A (65 kHz), B (100 kHz), C (130 kHz)
yy = 06 (65 kHz), 10 (100 kHz), 13 (130 kHz)
A = Assembly Location
WL = Wafer Lot
YY, Y = Year
WW, W = Work Week
▪ or G = Pb−Free Package
(Note: Microdot may be in either location)

ORDERING INFORMATION

See detailed ordering and shipping information in the package dimensions section on page 21 of this data sheet.

Features

- Built−in 700 V MOSFET with Typical R_{DSon} of 11 Ω and 22 Ω
- Large Creepage Distance Between High−Voltage Pins
- Current−Mode Fixed Frequency Operation: 65 kHz − 100 kHz − 130 kHz
- Skip−Cycle Operation at Low Peak Currents Only: No Acoustic Noise!
- Dynamic Self−Supply, No Need for an Auxiliary Winding
- Internal 1.0 ms Soft−Start
- Latched Overvoltage Protection with Auxiliary Winding Operation
- Frequency Jittering for Better EMI Signature
- Auto−Recovery Internal Output Short−Circuit Protection
- Below 100 mW Standby Power if Auxiliary Winding is Used
- Internal Temperature Shutdown
- Direct Optocoupler Connection
- SPICE Models Available for TRANsient Analysis
- These are Pb−Free and Halide−Free Devices

Typical Applications

- Low Power AC/DC Adapters for Chargers
- Auxiliary Power Supplies (USB, Appliances,TVs, etc.)

© Semiconductor Components Industries, LLC, 2014

PIN CONNECTIONS

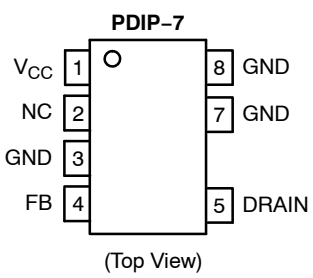

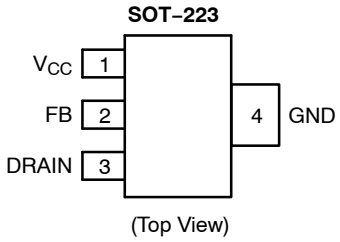

Indicative Maximum Output Power from NCP1014

R_{DSon} − Ip	230 Vac	100 − 250 Vac
11 Ω − 450 mA DSS	14 W	6.0 W
11 Ω − 450 mA Auxiliary Winding	19 W	8.0 W

1. Informative values only, with: Tamb = 50°C, Fswitching = 65 kHz, circuit mounted on minimum copper area as recommended.

DISCONTINUED
THIS DEVICE IS NOT RECOMMENDED FOR NEW DESIGN
PLEASE CONTACT YOUR onsemi
REPRESENTATIVE FOR INFORMATION

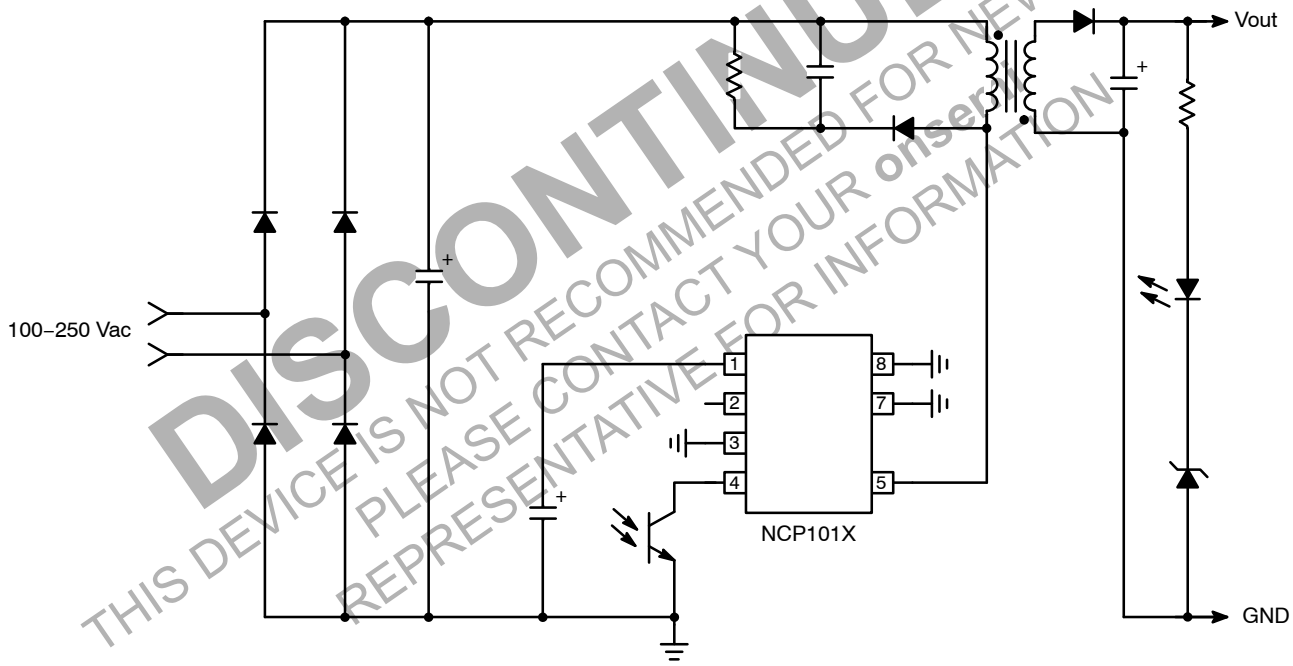

Figure 1. Typical Application Example

Quick Selection Table

	NCP1010			NCP1011			NCP1012			NCP1013			NCP1014	
R_{DSon} [Ω]	22						11							
Ipeak [mA]	100			250			250			350			450	
Freq [kHz]	65	100	130	65	100	130	65	100	130	65	100	130	65	100

PIN FUNCTION DESCRIPTION

Pin No. (SOT−223)	Pin No. (PDIP−7)	Pin Name	Function	Description
1	1	V_{CC}	Powers the Internal Circuitry	This pin is connected to an external capacitor of typically 10 μF. The natural ripple superimposed on the V_{CC} participates to the frequency jittering. For improved standby performance, an auxiliary V_{CC} can be connected to Pin 1. The V_{CC} also includes an active shunt which serves as an opto fail−safe protection.
−	2	NC	−	−
−	3	GND	The IC Ground	−
2	4	FB	Feedback Signal Input	By connecting an optocoupler to this pin, the peak current setpoint is adjusted accordingly to the output power demand.
3	5	Drain	Drain Connection	The internal drain MOSFET connection.
−	−	−	−	−
−	7	GND	The IC Ground	−
4	8	GND	The IC Ground	−

DISCONTINUED
THIS DEVICE IS NOT RECOMMENDED FOR NEW DESIGN
PLEASE CONTACT YOUR onsemi REPRESENTATIVE FOR INFORMATION

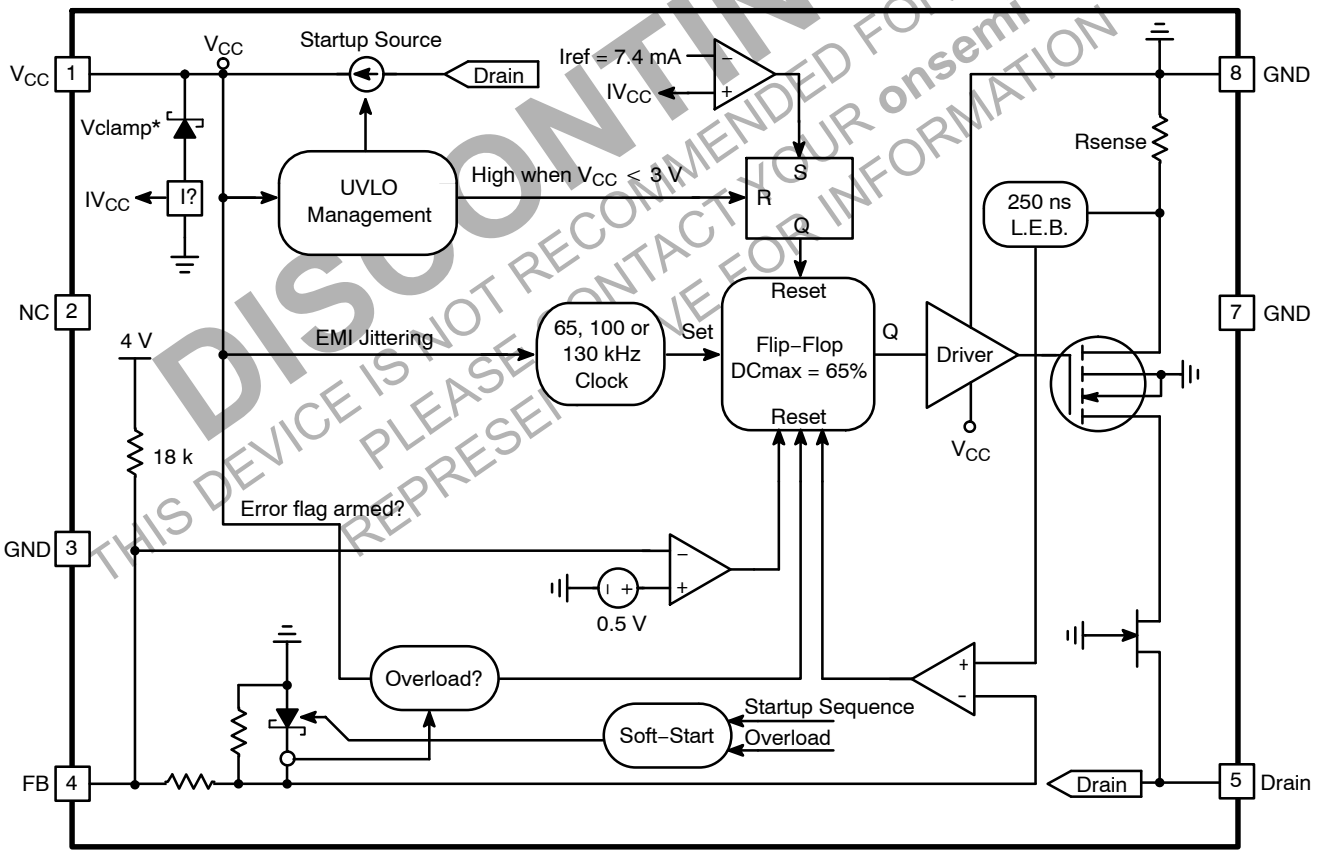

*Vclamp = VCC_{OFF} + 200 mV (8.7 V Typical)

Figure 2. Simplified Internal Circuit Architecture

MAXIMUM RATINGS

Rating		Symbol	Value	Unit
Power Supply Voltage on all pins, except Pin 5 (Drain)		V_{CC}	−0.3 to 10	V
Drain Voltage		–	−0.3 to 700	V
Drain Current Peak during Transformer Saturation	NCP1010/11 NCP1012/13/14	$I_{DS(pk)}$	550 1.0	mA A
Maximum Current into Pin 1 when Activating the 8.7 V Active Clamp		I_V_{CC}	15	mA
Thermal Characteristics P Suffix, Case 626A Junction−to−Lead Junction−to−Air, 2.0 oz (70 μm) Printed Circuit Copper Clad 0.36 Sq. Inch (2.32 Sq. Cm) 1.0 Sq. Inch (6.45 Sq. Cm) ST Suffix, Plastic Package Case 318E Junction−to−Lead Junction−to−Air, 2.0 oz (70 μm) Printed Circuit Copper Clad 0.36 Sq. Inch (2.32 Sq. Cm) 1.0 Sq. Inch (6.45 Sq. Cm)		 $R_{\theta JL}$ $R_{\theta JA}$ $R_{\theta JL}$ $R_{\theta JA}$ 	 9.0 77 60 14 74 55	°C/W
Maximum Junction Temperature		T_{Jmax}	150	°C
Storage Temperature Range		–	−60 to +150	°C
ESD Capability, Human Body Model (All pins except HV)		–	2.0	kV
ESD Capability, Machine Model		–	200	V

Stresses exceeding those listed in the Maximum Ratings table may damage the device. If any of these limits are exceeded, device functionality should not be assumed, damage may occur and reliability may be affected.

DISCONTINUED
THIS DEVICE IS NOT RECOMMENDED FOR NEW DESIGN
PLEASE CONTACT YOUR onsemi
REPRESENTATIVE FOR INFORMATION

ELECTRICAL CHARACTERISTICS (For typical values T_J = 25°C, for min/max values T_J = −40°C to +125°C, Max T_J = 150°C, V_{CC} = 8.0 V unless otherwise noted.)

Rating		Pin	Symbol	Min	Typ	Max	Unit
SUPPLY SECTION AND V_{CC} MANAGEMENT							
V_{CC} Increasing Level at which the Current Source Turns−off		1	VCC_{OFF}	7.9	8.5	9.1	V
V_{CC} Decreasing Level at which the Current Source Turns−on		1	VCC_{ON}	6.9	7.5	8.1	V
Hysteresis between VCC_{OFF} and VCC_{ON}		1	–	–	1.0	–	V
V_{CC} Decreasing Level at which the Latch−off Phase Ends		1	VCC_{latch}	4.4	4.7	5.1	V
V_{CC} Decreasing Level at which the Internal Latch is Released		1	VCC_{reset}	–	3.0	–	V
Internal IC Consumption, MOSFET Switching at 65 kHz (Note 2)		1	ICC1	–	0.92	1.1	mA
Internal IC Consumption, MOSFET Switching at 100 kHz (Note 2)		1	ICC1	–	0.95	1.15	mA
Internal IC Consumption, MOSFET Switching at 130 kHz (Note 2)		1	ICC1	–	0.98	1.2	mA
Internal IC Consumption, Latch−off Phase, V_{CC} = 6.0 V		1	ICC2	–	290	–	μA
Active Zener Voltage Positive Offset to VCC_{OFF}		1	Vclamp	140	200	300	mV
Latch−off Current		1	ILatch				mA
NCP1012/13/14	0°C < T_J < 125°C			6.3	7.4	9.2	
	−40°C < T_J < 125°C			5.8	7.4	9.2	
NCP1010/11	0°C < T_J < 125°C			5.8	7.3	9.0	
	−40°C < T_J < 125°C			5.3	7.3	9.0	
POWER SWITCH CIRCUIT							
Power Switch Circuit On−state Resistance		5	R_{DSon}	–			Ω
NCP1012/13/14 (Id = 50 mA)	T_J = 25°C				11	16	
	T_J = 125°C				19	24	
NCP1010/11 (Id = 50 mA)	T_J = 25°C				22	35	
	T_J = 125°C				38	50	

2. See characterization curves for temperature evolution.
3. Adjust di/dt to reach Ipeak in 3.2 μsec.
4. See characterization curves for temperature evolution.

ELECTRICAL CHARACTERISTICS (For typical values T_J = 25°C, for min/max values T_J = −40°C to +125°C, Max T_J = 150°C, V_{CC} = 8.0 V unless otherwise noted.)

Rating	Pin	Symbol	Min	Typ	Max	Unit
POWER SWITCH CIRCUIT						
Power Switch Circuit and Startup Breakdown Voltage ($ID_{(off)}$ = 120 μA, T_J = 25°C)	5	BVdss	700	–	–	V
Power Switch and Startup Breakdown Voltage Off−state Leakage Current		$I_{DS(OFF)}$				μA
T_J = −40°C (Vds = 650 V)	5		–	70	120	
T_J = 25°C (Vds = 700 V)	5		–	50	–	
T_J = 125°C (Vds = 700 V)	5		–	30	–	
Switching Characteristics (RL = 50 Ω, Vds Set for Idrain = 0.7 x Ilim)						ns
Turn−on Time (90%−10%)	5	ton	–	20	–	
Turn−off Time (10%−90%)	5	toff	–	10	–	
INTERNAL STARTUP CURRENT SOURCE						
High−voltage Current Source, V_{CC} = 8.0 V	1	IC1				mA
NCP1012/13/14 0°C < T_J < 125°C			5.0	8.0	10	
−40°C < T_J < 125°C			5.0	8.0	11	
NCP1010/11 0°C < T_J < 125°C			5.0	8.0	10.3	
−40°C < T_J < 125°C			5.0	8.0	11.5	
High−voltage Current Source, V_{CC} = 0	1	IC2	–	10	–	mA
Minimum Start−up Drain Voltage (I_{start} = 0.5 mA, V_{cc} = $V_{cc(on)}$ − 0.2 V)	5	$V_{start(min)}$		15	–	V
CURRENT COMPARATOR T_J = 25°C (Note 2)						
Maximum Internal Current Setpoint, NCP1010 (Note 3)	5	Ipeak (22)	90	100	110	mA
Maximum Internal Current Setpoint, NCP1011 (Note 3)	5	Ipeak (22)	225	250	275	mA
Maximum Internal Current Setpoint, NCP1012 (Note 3)	5	Ipeak (11)	225	250	275	mA
Maximum Internal Current Setpoint, NCP1013 (Note 3)	5	Ipeak (11)	315	350	385	mA
Maximum Internal Current Setpoint, NCP1014 (Note 3)	5	Ipeak (11)	405	450	495	mA
Default Internal Current Setpoint for Skip−Cycle Operation, Percentage of Max Ip	–	I_{Lskip}	–	25	–	%
Propagation Delay from Current Detection to Drain OFF State	–	T_{DEL}	–	125	–	ns
Leading Edge Blanking Duration	–	T_{LEB}	–	250	–	ns
INTERNAL OSCILLATOR						
Oscillation Frequency, 65 kHz Version, T_J = 25°C (Note 4)	–	f_{OSC}	59	65	71	kHz
Oscillation Frequency, 100 kHz Version, T_J = 25°C (Note 4)	–	f_{OSC}	90	100	110	kHz
Oscillation Frequency, 130 kHz Version, T_J = 25°C (Note 4)	–	f_{OSC}	117	130	143	kHz
Frequency Dithering Compared to Switching Frequency (with active DSS)	–	f_{dither}	–	±3.3	–	%
Maximum Duty−cycle	–	Dmax	62	67	72	%
FEEDBACK SECTION						
Internal Pull−up Resistor	4	Rup	–	18	–	kΩ
Internal Soft−Start (Guaranteed by Design)	–	Tss	–	1.0	–	ms
SKIP−CYCLE GENERATION						
Default Skip Mode Level on FB Pin	4	Vskip	–	0.5	–	V
TEMPERATURE MANAGEMENT						
Temperature Shutdown	–	TSD	140	150	160	°C
Hysteresis in Shutdown	–	–	–	50	–	°C

2. See characterization curves for temperature evolution.
3. Adjust di/dt to reach Ipeak in 3.2 μsec.
4. See characterization curves for temperature evolution.

Product parametric performance is indicated in the Electrical Characteristics for the listed test conditions, unless otherwise noted. Product performance may not be indicated by the Electrical Characteristics if operated under different conditions.

DISCONTINUED
THIS DEVICE IS NOT RECOMMENDED FOR NEW DESIGN
PLEASE CONTACT YOUR onsemi
REPRESENTATIVE FOR INFORMATION

TYPICAL CHARACTERISTICS

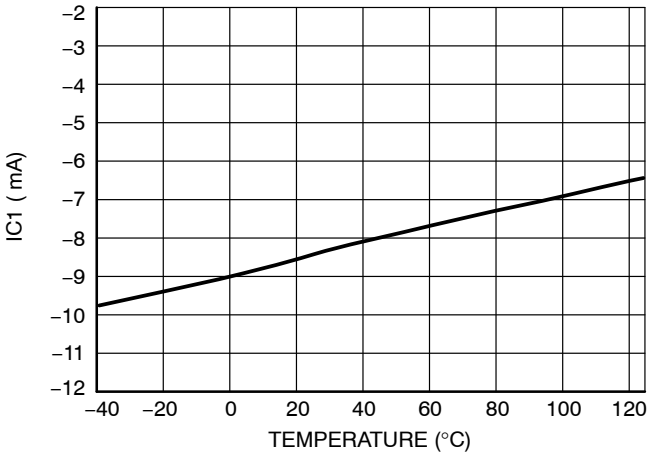

Figure 3. IC1 @ V_{CC} = 8.0 V, FB = 1.5 V vs. Temperature

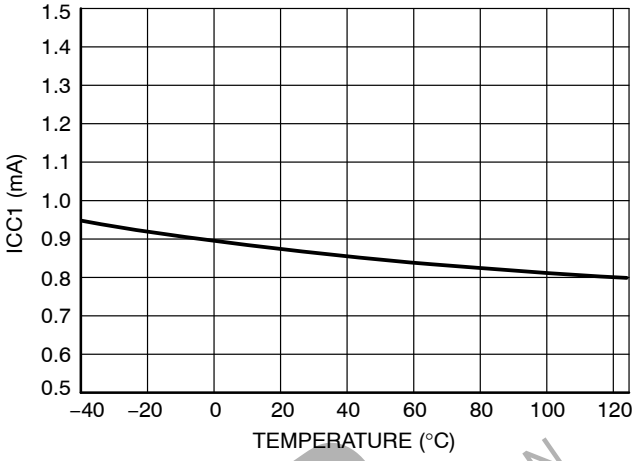

Figure 4. ICC1 @ V_{CC} = 8.0 V, FB = 1.5 V vs. Temperature

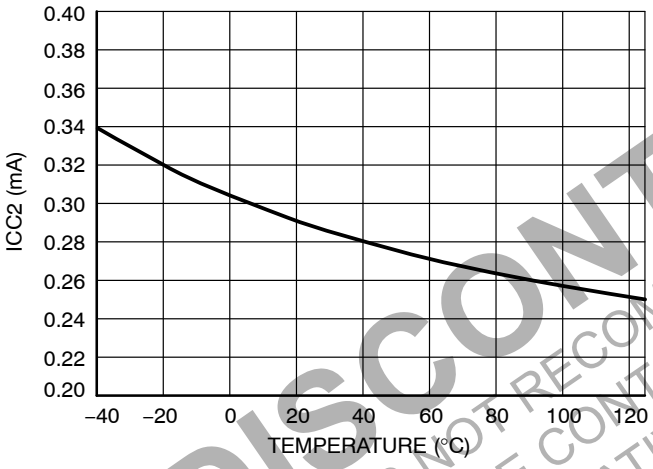

Figure 5. ICC2 @ V_{CC} = 6.0 V, FB = Open vs. Temperature

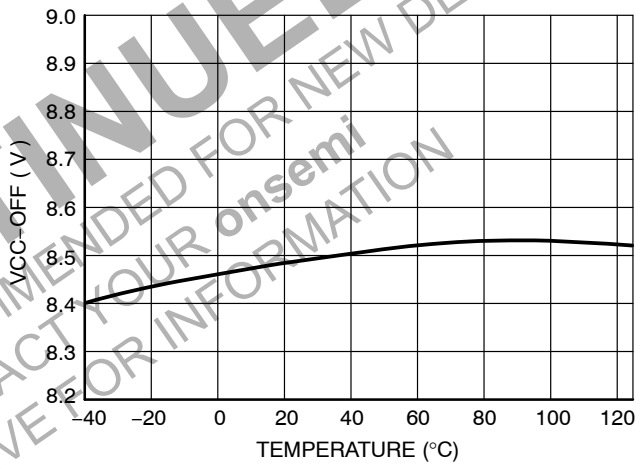

Figure 6. V_{CC} OFF, FB = 1.5 V vs. Temperature

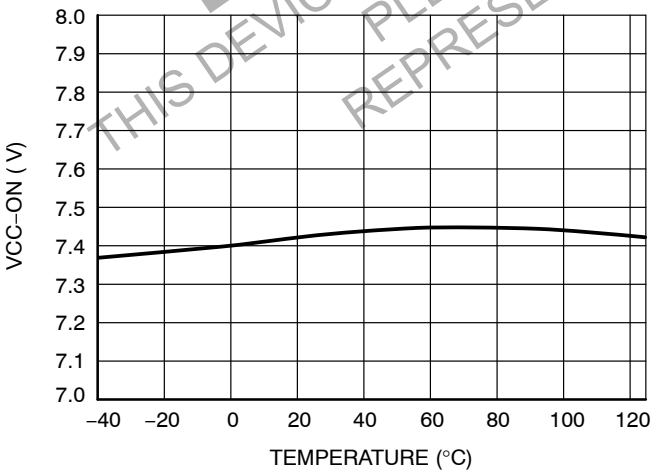

Figure 7. V_{CC} ON, FB = 3.5 V vs. Temperature

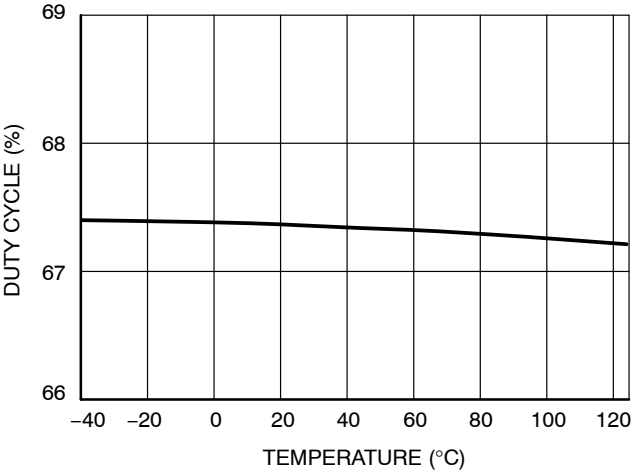

Figure 8. Duty Cycle vs. Temperature

DISCONTINUED
THIS DEVICE IS NOT RECOMMENDED FOR NEW DESIGN
PLEASE CONTACT YOUR onsemi
REPRESENTATIVE FOR INFORMATION

TYPICAL CHARACTERISTICS

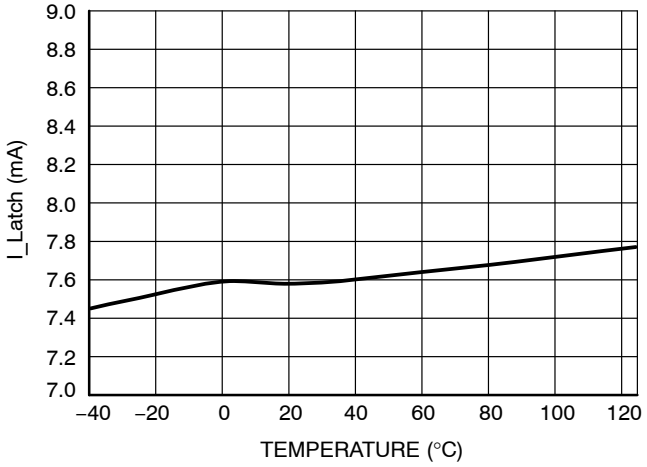

Figure 9. ILatch, FB = 1.5 V vs. Temperature

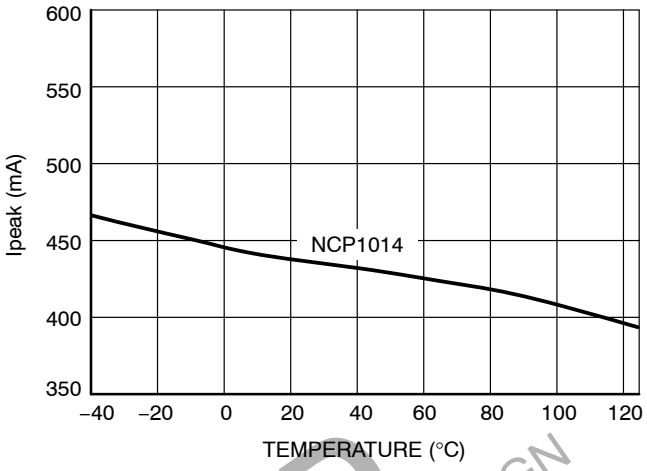

Figure 10. Ipeak−RR, V_{CC} = 8.0 V, FB = 3.5 V vs. Temperature

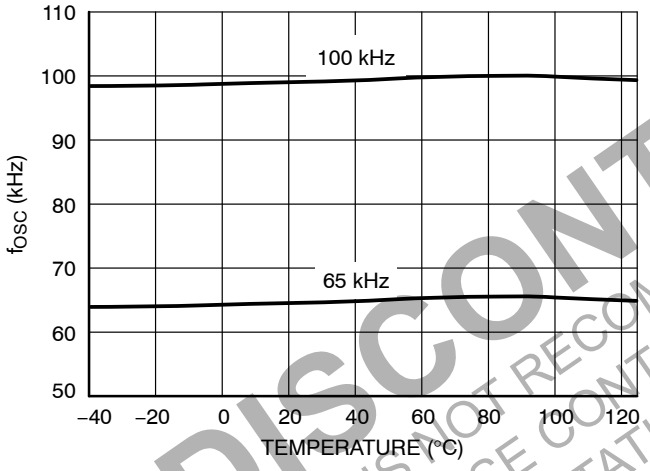

Figure 11. Frequency vs. Temperature

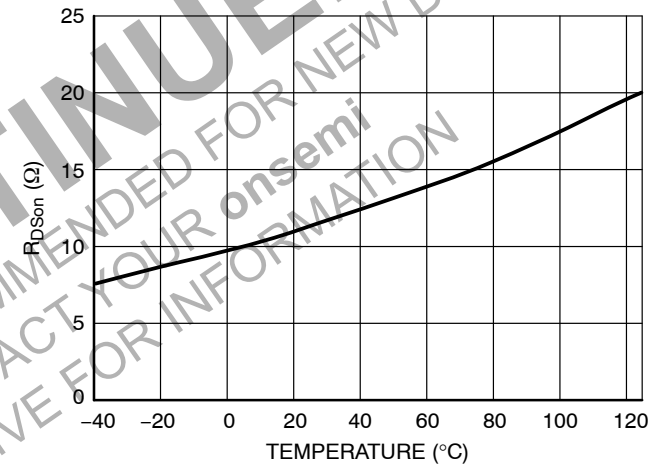

Figure 12. ON Resistance vs. Temperature, NCP1012/1013

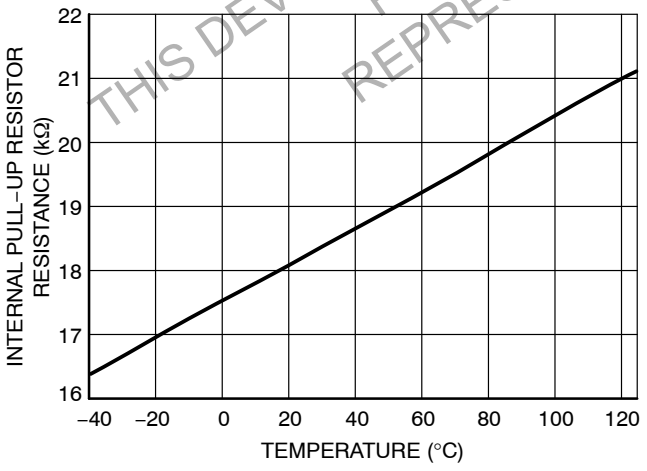

Figure 13. R_{up} vs. Temperature

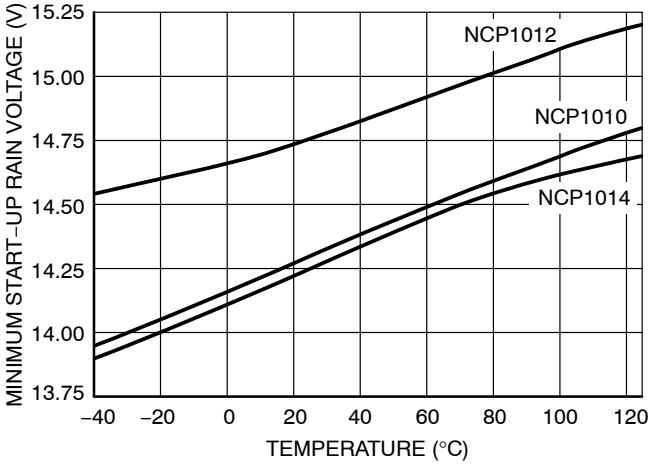

Figure 14. Minimum Start−up Drain Voltage vs. Temperature

DISCONTINUED
THIS DEVICE IS NOT RECOMMENDED FOR NEW DESIGN
PLEASE CONTACT YOUR onsemi
REPRESENTATIVE FOR INFORMATION

APPLICATION INFORMATION

Introduction

The NCP101X offers a complete current−mode control solution (actually an enhanced NCP1200 controller section) together with a high−voltage power MOSFET in a monolithic structure. The component integrates everything needed to build a rugged and low−cost Switch−Mode Power Supply (SMPS) featuring low standby power. The Quick Selection Table on Page 2, details the differences between references, mainly peak current setpoints and operating frequency.

No need for an auxiliary winding: onsemi Very High Voltage Integrated Circuit technology lets you supply the IC directly from the high−voltage DC rail. We call it Dynamic Self−Supply (DSS). This solution simplifies the transformer design and ensures a better control of the SMPS in difficult output conditions, e.g. constant current operations. However, for improved standby performance, an auxiliary winding can be connected to the V_{CC} pin to disable the DSS operation.

Short−circuit protection: By permanently monitoring the feedback line activity, the IC is able to detect the presence of a short−circuit, immediately reducing the output power for a total system protection. Once the short has disappeared, the controller resumes and goes back to normal operation.

Fail−safe optocoupler and OVP: When an auxiliary winding is connected to the V_{CC} pin, the device stops its internal Dynamic Self−Supply and takes its operating power from the auxiliary winding. A 8.7 V active clamp is connected between V_{CC} and ground. In case the current injected in this clamp exceeds a level of 7.4 mA (typical), the controller immediately latches off and stays in this position until V_{CC} cycles down to 3.0 V (e.g. unplugging the converter from the wall). By adjusting a limiting resistor in series with the V_{CC} terminal, it becomes possible to implement an overvoltage protection function, latching off the circuit in case of broken optocoupler or feedback loop problems.

Low standby−power: If SMPS naturally exhibits a good efficiency at nominal load, it begins to be less efficient when the output power demand diminishes. By skipping unneeded switching cycles, the NCP101X drastically reduces the power wasted during light load conditions. An auxiliary winding can further help decreasing the standby power to extremely low levels by invalidating the DSS operation. Typical measurements show results below 80 mW @ 230 Vac for a typical 7.0 W universal power supply.

No acoustic noise while operating: Instead of skipping cycles at high peak currents, the NCP101X waits until the peak current demand falls below a fixed 1/4 of the maximum limit. As a result, cycle skipping can take place without having a singing transformer … You can thus select cheap magnetic components free of noise problems.

SPICE model: A dedicated model to run transient cycle−by−cycle simulations is available but also an averaged version to help close the loop. Ready−to−use templates can be downloaded in OrCAD's PSpice, and INTUSOFT's IsSpice4 from ON Semiconductor web site, NCP101X related section.

Dynamic Self−Supply

When the power supply is first powered from the mains outlet, the internal current source (typically 8.0 mA) is biased and charges up the V_{CC} capacitor from the drain pin. Once the voltage on this V_{CC} capacitor reaches the VCC_{OFF} level (typically 8.5 V), the current source turns off and pulses are delivered by the output stage: the circuit is awake and activates the power MOSFET. Figure 15 details the internal circuitry.

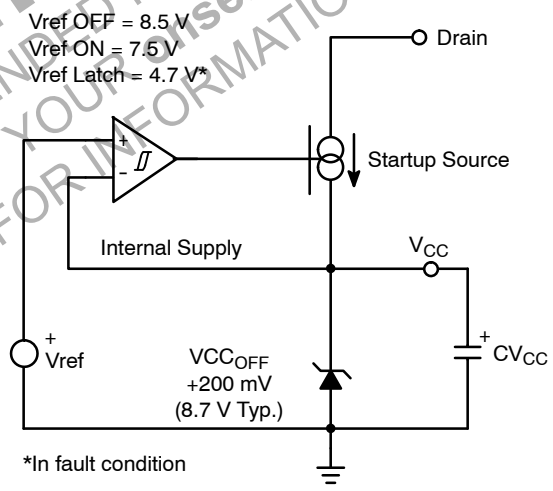

Figure 15. The Current Source Regulates V_{CC} by Introducing a Ripple

DISCONTINUED
THIS DEVICE IS NOT RECOMMENDED FOR NEW DESIGN
PLEASE CONTACT YOUR onsemi
REPRESENTATIVE FOR INFORMATION

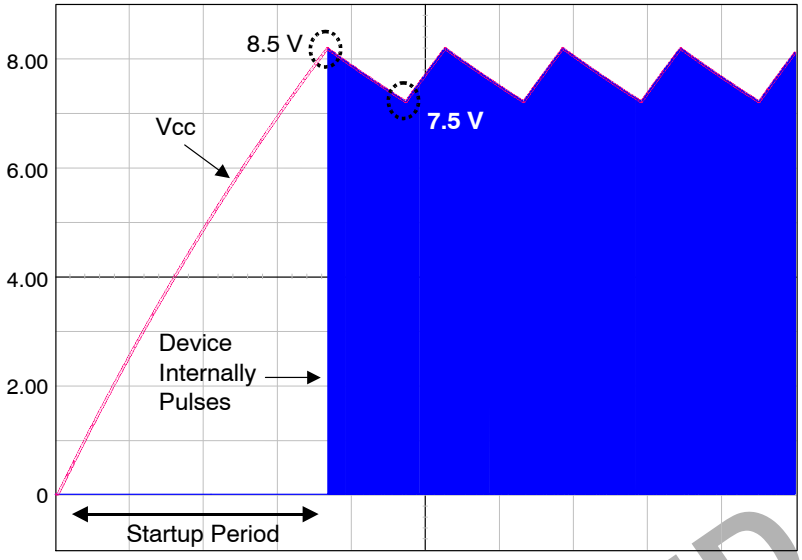

Figure 16. The Charge/Discharge Cycle Over a 10 μF V_{CC} Capacitor

DISCONTINUED
THIS DEVICE IS NOT RECOMMENDED FOR NEW DESIGN
PLEASE CONTACT YOUR onsemi
REPRESENTATIVE FOR INFORMATION

The protection burst duty−cycle can easily be computed through the various timing events as portrayed by Figure 18.

Being loaded by the circuit consumption, the voltage on the V_{CC} capacitor goes down. When the DSS controller detects that V_{CC} has reached 7.5 V (VCC_{ON}), it activates the internal current source to bring V_{CC} toward 8.5 V and stops again: a cycle takes place whose low frequency depends on the V_{CC} capacitor and the IC consumption. A 1.0 V ripple takes place on the V_{CC} pin whose average value equals (VCC_{OFF} + VCC_{ON})/2. Figure 16 portrays a typical operation of the DSS.

As one can see, the V_{CC} capacitor shall be dimensioned to offer an adequate startup time, i.e. ensure regulation is reached before V_{CC} crosses 7.5 V (otherwise the part enters the fault condition mode). If we know that ΔV = 1.0 V and ICC1 (max) is 1.1 mA (for instance we selected an 11 Ω device switching at 65 kHz), then the V_{CC} capacitor can be calculated using: $C \geq \frac{ICC1 \cdot tstartup}{\Delta V}$ (eq. 1). Let's suppose that the SMPS needs 10 ms to startup, then we will calculate C to offer a 15 ms period. As a result, C should be greater than 20 μF thus the selection of a 33 μF/16 V capacitor is appropriate.

Short Circuit Protection

The internal protection circuitry involves a patented arrangement that permanently monitors the assertion of an internal error flag. This error flag is, in fact, a signal that instructs the controller that the internal maximum peak current limit is reached. This naturally occurs during the startup period (Vout is not stabilized to the target value) or when the optocoupler LED is no longer biased, e.g. in a short−circuit condition or when the feedback network is broken. When the DSS normally operates, the logic checks for the presence of the error flag every time V_{CC} crosses VCC_{ON}. If the error flag is low (peak limit not active) then the IC works normally. If the error signal is active, then the NCP101X immediately stops the output pulses, reduces its internal current consumption and does not allow the startup source to activate: V_{CC} drops toward ground until it reaches the so−called latch−off level, where the current source activates again to attempt a new restart. When the error is gone, the IC automatically resumes its operation. If the default is still there, the IC pulses during 8.5 V down to 7.5 V and enters a new latch−off phase. The resulting burst operation guarantees a low average power dissipation and lets the SMPS sustain a permanent short−circuit. Figure 17 shows the corresponding diagram.

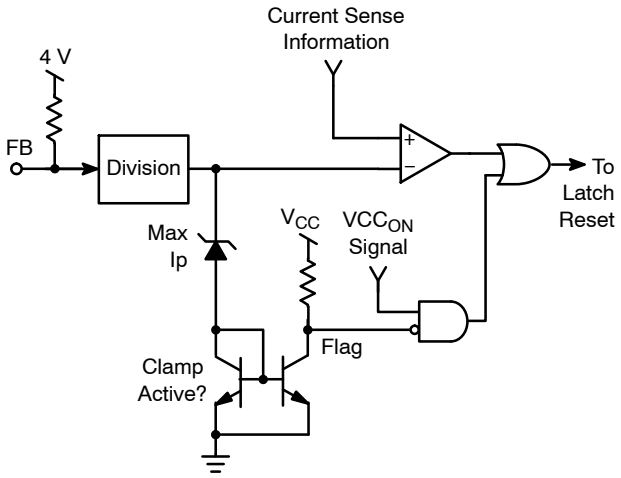

Figure 17. Simplified NCP101X Short−Circuit Detection Circuitry

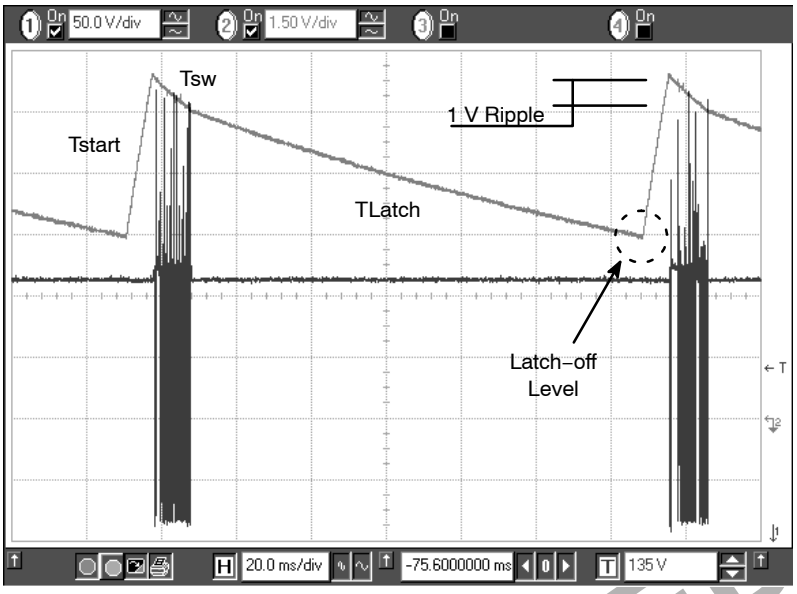

Figure 18. NCP101X Facing a Fault Condition (Vin = 150 Vdc)

DISCONTINUED
THIS DEVICE IS NOT RECOMMENDED FOR NEW DESIGN
PLEASE CONTACT YOUR onsemi
REPRESENTATIVE FOR INFORMATION

The rising slope from the latch−off level up to 8.5 V is expressed by: $Tstart = \frac{\Delta V1 \cdot C}{IC1}$. The time during which the IC actually pulses is given by $tsw = \frac{\Delta V2 \cdot C}{ICC1}$. Finally, the latch−off time can be derived using the same formula topology: $TLatch = \frac{\Delta V3 \cdot C}{ICC2}$. From these three definitions, the burst duty−cycle can be computed: $dc = \frac{Tsw}{Tstart + Tsw + TLatch}$ (eq. 2). $dc = \frac{\Delta V2}{ICC1 \cdot \left(\frac{\Delta V2}{ICC1} + \frac{\Delta V1}{IC1} + \frac{\Delta V3}{ICC2}\right)}$ (eq. 3). Feeding the equation with values extracted from the parameter section gives a typical duty−cycle of 13%, precluding any lethal thermal runaway while in a fault condition.

DSS Internal Dissipation

The Dynamic Self−Supplied pulls energy out from the drain pin. In Flyback−based converters, this drain level can easily go above 600 V peak and thus increase the stress on the DSS startup source. However, the drain voltage evolves with time and its period is small compared to that of the DSS. As a result, the averaged dissipation, excluding capacitive losses, can be derived by: $P_{DSS} = ICC1 \cdot < Vds(t) >$ (eq. 4). Figure 19 portrays a typical drain−ground waveshape where leakage effects have been removed.

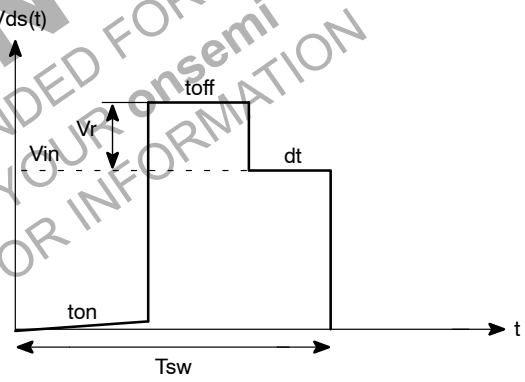

Figure 19. A typical drain−ground waveshape where leakage effects are not accounted for.

By looking at Figure 19, the average result can easily be derived by additive square area calculation:

$$< Vds(t) > = Vin \cdot (1 - d) + Vr \cdot \frac{toff}{Tsw} \quad \text{(eq. 5)}$$

By developing Equation 5, we obtain:

$$< Vds(t) > = Vin - Vin \cdot \frac{ton}{Tsw} + Vr \cdot \frac{toff}{Tsw} \quad \text{(eq. 6)}$$

toff can be expressed by: $toff = Ip \cdot \frac{Lp}{Vr}$ (eq. 7) where ton can be evaluated by: $ton = Ip \cdot \frac{Lp}{Vin}$ (eq. 8).

Plugging Equations 7 and 8 into Equation 6 leads to $< Vds(t) > = Vin$ and thus, $P_{DSS} = Vin \times ICC1$ (eq. 9) .

The worse case occurs at high line, when Vin equals 370 Vdc. With ICC1 = 1.1 mA (65 kHz version), we can expect a DSS dissipation around 407 mW. If you select a higher switching frequency version, the ICC1 increases and it is likely that the DSS consumption exceeds that number. In that case, we recommend to add an auxiliary winding in order to offer more dissipation room to the power MOSFET.

Please read application note AND8125/D, “Evaluating the Power Capability of the NCP101X Members” to help in selecting the right part/configuration for your application.

Lowering the Standby Power with an Auxiliary Winding

The DSS operation can bother the designer when its dissipation is too high and extremely low standby power is a must. In both cases, one can connect an auxiliary winding to disable the self−supply. The current source then ensures the startup sequence only and stays in the off state as long as V_{CC} does not drop below VCC_{ON} or 7.5 V. Figure 20 shows that the insertion of a resistor (Rlimit) between the auxiliary DC level and the V_{CC} pin is mandatory to not damage the internal 8.7 V active Zener diode during an overshoot for instance (absolute maximum current is 15 mA) and to implement the fail−safe optocoupler protection as offered by the active clamp. Please note that there cannot be bad interaction between the clamping voltage of the internal Zener and VCC_{OFF} since this clamping voltage is actually built on top of VCC_{OFF} with a fixed amount of offset (200 mV typical).

Self−supplying controllers in extremely low standby applications often puzzles the designer. Actually, if a SMPS operated at nominal load can deliver an auxiliary voltage of an arbitrary 16 V (Vnom), this voltage can drop to below 10 V (Vstby) when entering standby. This is because the recurrence of the switching pulses expands so much that the low frequency refueling rate of the V_{CC} capacitor is not enough to keep a constant auxiliary voltage. Figure 21 portrays a typical scope shot of a SMPS entering deep standby (output unloaded). So care must be taken when calculating Rlimit 1) to not trigger the V_{CC} over current latch [by injecting 6.3 mA (min. value) into the active clamp] in normal operation but 2) not to drop too much voltage over Rlimit when entering standby. Otherwise the DSS could reactivate and the standby performance would degrade. We are thus able to bound Rlimit between two equations:

$$\frac{Vnom - Vclamp}{Itrip} \leq Rlimit \leq \frac{Vstby - VCC_{ON}}{ICC1} \quad \text{(eq. 10)}$$

Where:

Vnom is the auxiliary voltage at nominal load.

Vstdby is the auxiliary voltage when standby is entered.

Itrip is the current corresponding to the nominal operation. It must be selected to avoid false tripping in overshoot conditions.

ICC1 is the controller consumption. This number slightly decreases compared to ICC1 from the spec since the part in standby almost does not switch.

VCC_{ON} is the level above which Vaux must be maintained to keep the DSS in the OFF mode. It is good to shoot around 8.0 V in order to offer an adequate design margin, e.g. to not reactivate the startup source (which is not a problem in itself if low standby power does not matter).

Since Rlimit shall not bother the controller in standby, e.g. keep Vaux to around 8.0 V (as selected above), we purposely select a Vnom well above this value. As explained before, experience shows that a 40% decrease can be seen on auxiliary windings from nominal operation down to standby mode. Let’s select a nominal auxiliary winding of 20 V to offer sufficient margin regarding 8.0 V when in standby (Rlimit also drops voltage in standby…). Plugging the values in Equation 10 gives the limits within which Rlimit shall be selected:

$$\frac{20 - 8.7}{6.3\ m} \leq Rlimit \leq \frac{12 - 8}{1.1\ m}, \text{ that is to say:}$$
$$1.8\ k < Rlimit < 3.6\ k \quad \text{(eq. 11)}$$

If we design a power supply delivering 12 V, then the ratio between auxiliary and power must be: 12/20 = 0.6. The OVP latch will activate when the clamp current exceeds 6.3 mA. This will occur when Vaux increases to: 8.7 V + 1.8 k x (6.4m + 1.1m) = 22.2 V for the first boundary or 8.7 V + 3.6 k x (6.4m +1.1m) = 35.7 V for second boundary. On the power output, it will respectively give 22.2 x 0.6 = 13.3 V and 35.7 x 0.6 = 21.4 V. As one can see, tweaking the Rlimit value will allow the selection of a given overvoltage output level. Theoretically predicting the auxiliary drop from nominal to standby is an almost impossible exercise since many parameters are involved, including the converter time constants. Fine tuning of Rlimit thus requires a few iterations and experiments on a breadboard to check Vaux variations but also output voltage excursion in fault. Once properly adjusted, the fail−safe protection will preclude any lethal voltage runaways in case a problem would occur in the feedback loop.

When an OVP occurs, all switching pulses are permanently disabled, the output voltage thus drops to zero. The V_{CC} cycles up and down between 8.5–4.7 V and stays in this state until the user unplugs the power supply and forces V_{CC} to drop below 3.0 V (VCC_{reset}). Below this value, the internal OVP latch is reset and when the high voltage is reapplied, a new startup sequence can take place in an attempt to restart the converter.

DISCONTINUED
THIS DEVICE IS NOT RECOMMENDED FOR NEW DESIGN
PLEASE CONTACT YOUR onsemi
REPRESENTATIVE FOR INFORMATION

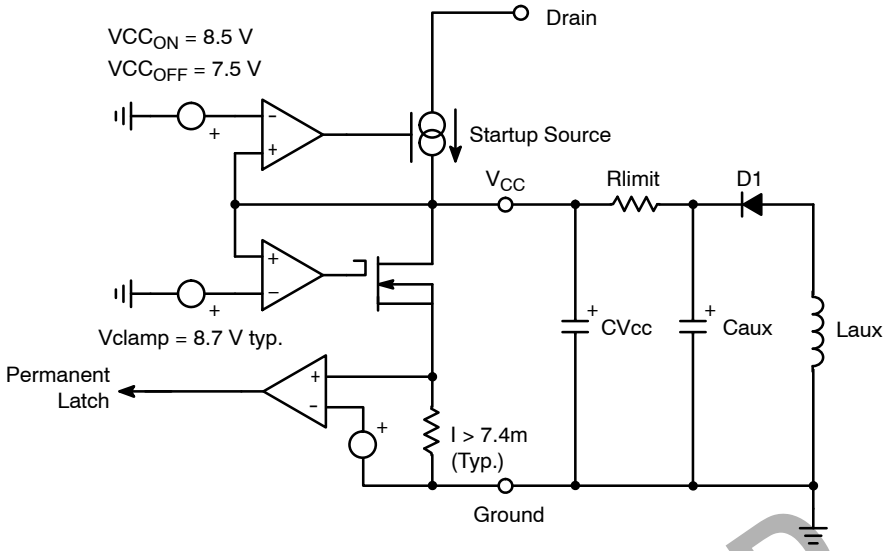

Figure 20. A more detailed view of the NCP101X offers better insight on how to properly wire an auxiliary winding.

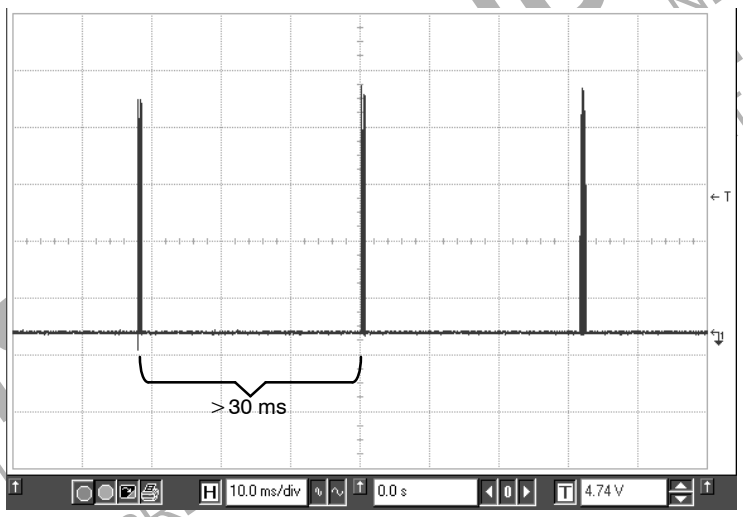

Figure 21. The burst frequency becomes so low that it is difficult to keep an adequate level on the auxiliary V$_{CC}$ . . .

DISCONTINUED
NEW DESIGN
THIS DEVICE
REPLACEMENT

Lowering the Standby Power with Skip−Cycle

Skip−cycle offers an efficient way to reduce the standby power by skipping unwanted cycles at light loads. However, the recurrent frequency in skip often enters the audible range and a high peak current obviously generates acoustic noise in the transformer. The noise takes its origins in the resonance of the transformer mechanical structure which is excited by the skipping pulses. A possible solution, successfully implemented in the NCP1200 series, also authorizes skip−cycle but only when the power demand has dropped below a given level. At this time, the peak current is reduced and no noise can be heard. Figure 22 pictures the peak current evolution of the NCP101X entering standby.

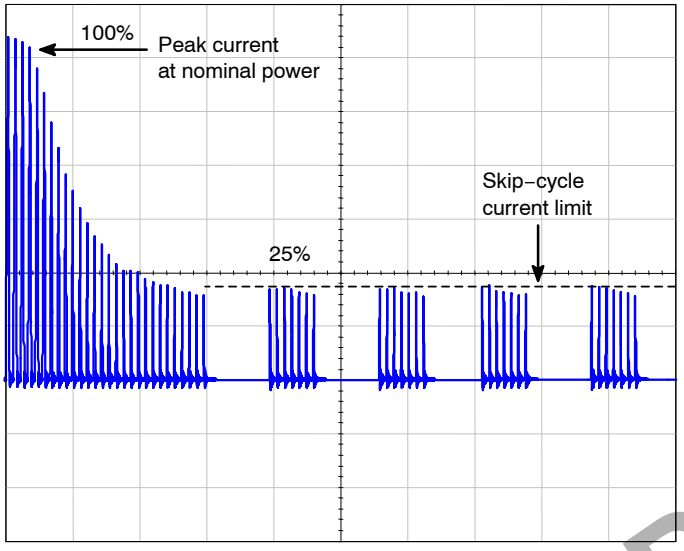

Figure 22. Low Peak Current Skip−Cycle Guarantees Noise−Free Operation

Full power operation involves the nominal switching frequency and thus avoids any noise when running.

Experiments carried on a 5.0 W universal mains board unveiled a standby power of 300 mW @ 230 Vac with the DSS activated and dropped to less than 100 mW when an auxiliary winding is connected.

Frequency Jittering for Improved EMI Signature

By sweeping the switching frequency around its nominal value, it spreads the energy content on adjacent frequencies rather than keeping it centered in one single ray. This offers the benefit to artificially reduce the measurement noise on a standard EMI receiver and pass the tests more easily. The EMI sweep is implemented by routing the V_{CC} ripple (induced by the DSS activity) to the internal oscillator. As a result, the switching frequency moves up and down to the DSS rhythm. Typical deviation is ±3.3% of the nominal frequency. With a 1.0 V peak−to−peak ripple, the frequency will equal 65 kHz in the middle of the ripple and will increase as V_{CC} rises or decrease as V_{CC} ramps down. Figure 23 portrays the behavior we have adopted.

DISCONTINUED
THIS DEVICE IS NOT RECOMMENDED FOR NEW DESIGN
PLEASE CONTACT YOUR onsemi
REPRESENTATIVE FOR INFORMATION

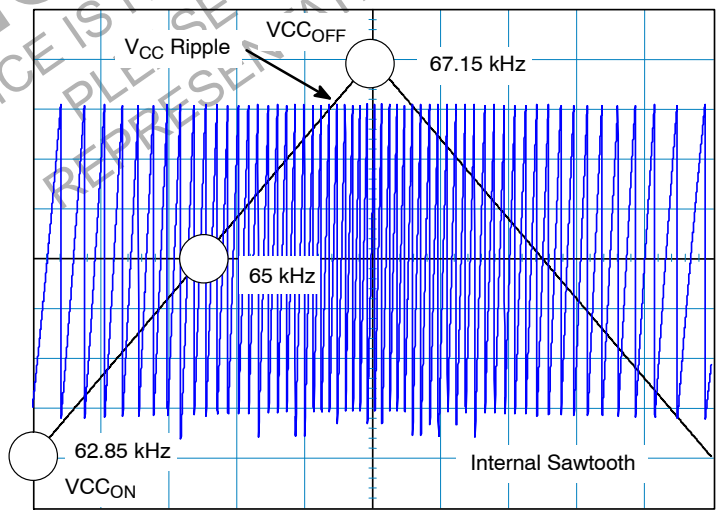

Figure 23. The V_{CC} ripple is used to introduce a frequency jittering on the internal oscillator sawtooth. Here, a 65 kHz version was selected.

Soft−Start

The NCP101X features an internal 1.0 ms soft−start activated during the power on sequence (PON). As soon as V_{CC} reaches VCC_{OFF}, the peak current is gradually increased from nearly zero up to the maximum internal clamping level (e.g. 350 mA). This situation lasts 1.0 ms and further to that time period, the peak current limit is blocked to the maximum until the supply enters regulation. The soft−start is also activated during the over current burst (OCP) sequence. Every restart attempt is followed by a soft−start activation. Generally speaking, the soft−start will be activated when V_{CC} ramps up either from zero (fresh power−on sequence) or 4.7 V, the latch−off voltage occurring during OCP. Figure 24 portrays the soft−start behavior. The time scales are purposely shifted to offer a better zoom portion.

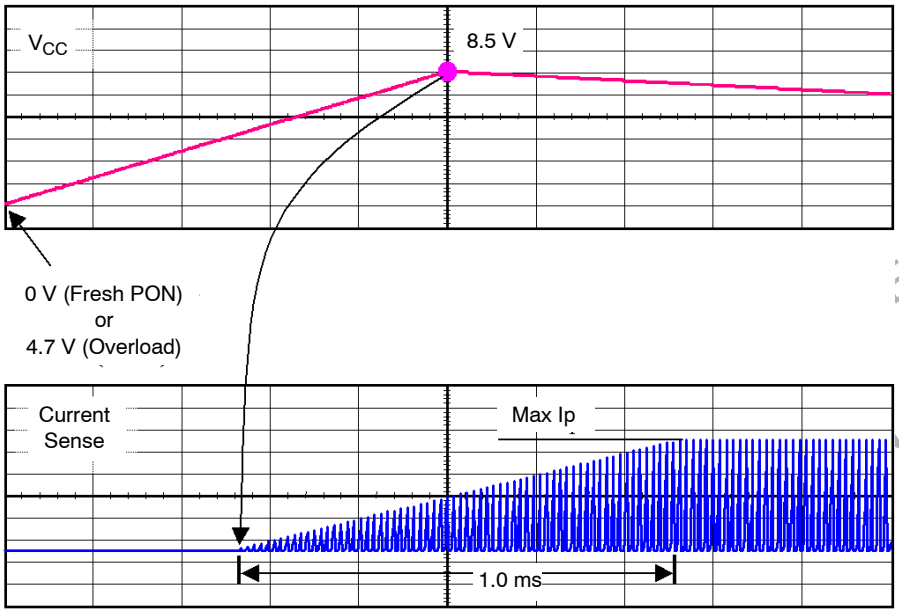

Figure 24. Soft−Start is activated during a startup sequence or an OCP condition.

Non−Latching Shutdown

In some cases, it might be desirable to shut off the part temporarily and authorize its restart once the default has disappeared. This option can easily be accomplished through a single NPN bipolar transistor wired between FB and ground. By pulling FB below the internal skip level (Vskip), the output pulses are disabled. As soon as FB is relaxed, the IC resumes its operation. Figure 25 depicts the application example.

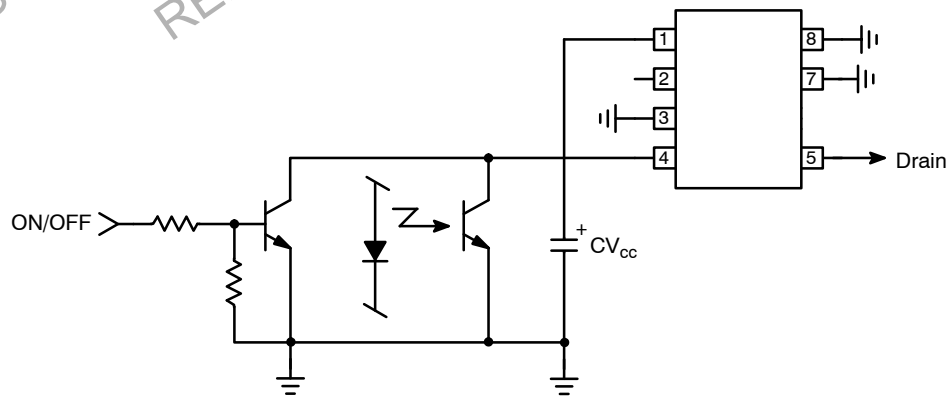

Figure 25. A non−latching shutdown where pulses are stopped as long as the NPN is biased.

Full Latching Shutdown

Other applications require a full latching shutdown, e.g. when an abnormal situation is detected (overtemperature or overvoltage). This feature can easily be implemented through two external transistors wired as a discrete SCR. When the OVP level exceeds the Zener breakdown voltage, the NPN biases the PNP and fires the equivalent SCR, permanently bringing down the FB pin. The switching pulses are disabled until the user unplugs the power supply.

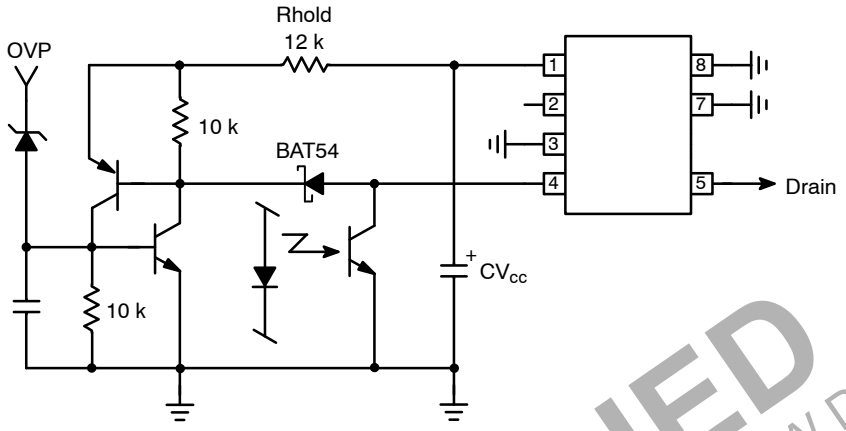

Figure 26. Two Bipolars Ensure a Total Latch−Off of the SMPS in Presence of an OVP

Rhold ensures that the SCR stays on when fired. The bias current flowing through Rhold should be small enough to let the V_{CC} ramp up (8.5 V) and down (7.5 V) when the SCR is fired. The NPN base can also receive a signal from a temperature sensor. Typical bipolars can be MMBT2222 and MMBT2907 for the discrete latch. The MMBT3946 features two bipolars NPN+PNP in the same package and could also be used.

Power Dissipation and Heatsinking

The NCP101X welcomes two dissipating terms, the DSS current−source (when active) and the MOSFET. Thus, $P_{tot} = P_{DSS} + P_{MOSFET}$. When the PDIP−7 package is surrounded by copper, it becomes possible to drop its thermal resistance junction−to−ambient, $R_{\theta JA}$ down to 75°C/W and thus dissipate more power. The maximum power the device can thus evacuate is: $P_{max} = \frac{T_{Jmax} - T_{ambmax}}{R_{\theta JA}}$ (eq. 12) which gives around 1.0 W for an ambient of 50°C. The losses inherent to the MOSFET R_{DSon} can be evaluated using the following formula: $P_{mos} = \frac{1}{3} \cdot I_p^2 \cdot d \cdot R_{DSon}$ (eq. 13), where Ip is the worse case peak current (at the lowest line input), d is the converter operating duty−cycle and R_{DSon}, the MOSFET resistance for T_J = 100°C. This formula is only valid for Discontinuous Conduction Mode (DCM) operation where the turn−on losses are null (the primary current is zero when you restart the MOSFET). Figure 27 gives a possible layout to help drop the thermal resistance. When measured on a 35 μm (1 oz) copper thickness PCB, we obtained a thermal resistance of 75°C/W.

DISCONTINUED
THIS DEVICE IS NOT RECOMMENDED FOR NEW DESIGN
PLEASE CONTACT YOUR onsemi
REPRESENTATIVE FOR INFORMATION

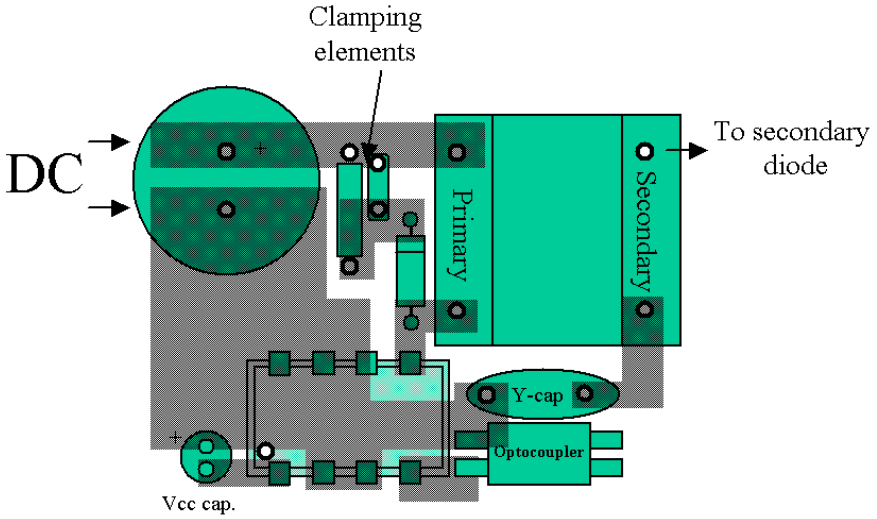

Figure 27. A Possible PCB Arrangement to Reduce the Thermal Resistance Junction−to−Ambient

Design Procedure

The design of an SMPS around a monolithic device does not differ from that of a standard circuit using a controller and a MOSFET. However, one needs to be aware of certain characteristics specific of monolithic devices:

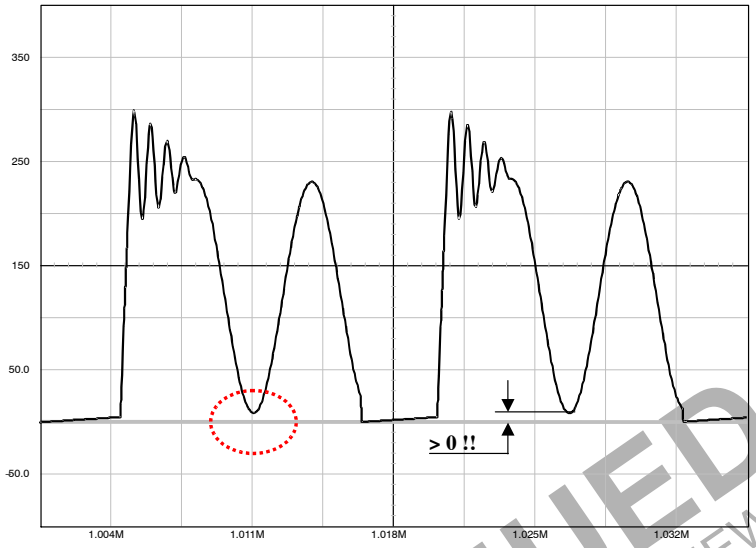

Figure 28. The Drain−Source Wave Shall Always be Positive . . .

1. In any case, the lateral MOSFET body−diode shall never be forward biased, either during startup (because of a large leakage inductance) or in normal operation as shown by Figure 28.

As a result, the Flyback voltage which is reflected on the drain at the switch opening cannot be larger than the input voltage. When selecting components, you thus must adopt a turn ratio which adheres to the following equation: $N \cdot (Vout + Vf) < Vin_{min}$ (eq. 14) . For instance, if operating from a 120 V DC rail, with a delivery of 12 V, we can select a reflected voltage of 100 Vdc maximum: 120–100 > 0. Therefore, the turn ratio Np:Ns must be smaller than 100/(12 + 1) = 7.7 or Np:Ns < 7.7. We will see later on how it affects the calculation.

2. A current−mode architecture is, by definition, sensitive to subharmonic oscillations. Subharmonic oscillations only occur when the SMPS is operating in Continuous Conduction Mode (CCM) together with a duty−cycle greater than 50%. As a result, we recommend to operate the device in DCM only, whatever duty−cycle it implies (max = 65%). However, CCM operation with duty−cycles below 40% is possible.
3. Lateral MOSFETs have a poorly dopped body−diode which naturally limits their ability to sustain the avalanche. A traditional RCD clamping network shall thus be installed to protect the MOSFET. In some low power applications, a simple capacitor can also be used since

$$Vdrain\ max = Vin + N \cdot (Vout + Vf) + Ip \cdot \sqrt{\frac{Lf}{Ctot}}$$

(eq. 15) , where Lf is the leakage inductance, Ctot is the total capacitance at the drain node (which is increased by the capacitor wired between drain and source), N the Np:Ns turn ratio, Vout the output voltage, Vf the secondary diode forward drop and finally, Ip the maximum peak current. Worse case occurs when the SMPS is very close to regulation, e.g. the Vout target is almost reached and Ip is still pushed to the maximum.

Taking into account all previous remarks, it becomes possible to calculate the maximum power that can be transferred at low line.

When the switch closes, Vin is applied across the primary inductance Lp until the current reaches the level imposed by the feedback loop. The duration of this event is called the ON time and can be defined by:

$$ton = \frac{Lp \cdot Ip}{Vin} \quad \text{(eq. 16)}$$

At the switch opening, the primary energy is transferred to the secondary and the flyback voltage appears across Lp, resetting the transformer core with a slope of $\frac{N \cdot (Vout + Vf)}{Lp}$. toff, the OFF time is thus:

$$toff = \frac{Lp \cdot Ip}{N \cdot (Vout + Vf)} \quad \text{(eq. 17)}$$

If one wants to keep DCM only, but still need to pass the maximum power, we will not allow a dead−time after the core is reset, but rather immediately restart. The switching time can be expressed by:

$$Tsw = toff + ton = Lp \cdot Ip \cdot \left(\frac{1}{Vin} + \frac{1}{N \cdot (Vout + Vf)}\right) \quad \text{(eq. 18)}$$

DISCONTINUED
THIS DEVICE IS NOT RECOMMENDED FOR NEW DESIGN
PLEASE CONTACT YOUR onsemi
REPRESENTATIVE FOR INFORMATION

The Flyback transfer formula dictates that:

$$\frac{Pout}{\eta} = \frac{1}{2} \cdot Lp \cdot Ip^2 \cdot Fsw \quad \text{(eq. 19)}$$ which, by extracting Ip and plugging into Equation 19, leads to:

$$Tsw = Lp \sqrt{\frac{2 \cdot Pout}{\eta \cdot Fsw \cdot Lp}} \cdot \left(\frac{1}{Vin} + \frac{1}{N \cdot (Vout + Vf)} \right) \quad \text{(eq. 20)}$$

Extracting Lp from Equation 20 gives:

$$Lp_{critical} = \frac{(Vin \cdot Vr)^2 \cdot \eta}{2 \cdot Fsw \cdot [Pout \cdot (Vr^2 + 2 \cdot Vr \cdot Vin + Vin^2)]} \quad \text{(eq. 21)}$$, with Vr = N . (Vout + Vf) and η the efficiency.

If Lp critical gives the inductance value above which DCM operation is lost, there is another expression we can write to connect Lp, the primary peak current bounded by the NCP101X and the maximum duty−cycle that needs to stay below 50%:

$$Lpmax = \frac{DCmax \cdot Vinmin \cdot Tsw}{Ipmax} \quad \text{(eq. 22)}$$ where Vinmin corresponds to the lowest rectified bulk voltage, hence the longest ton duration or largest duty−cycle. Ip max is the available peak current from the considered part, e.g. 350 mA typical for the NCP1013 (however, the minimum value of this parameter shall be considered for reliable evaluation). Combining Equations 21 and 22 gives the maximum theoretical power you can pass respecting the peak current capability of the NCP101X, the maximum duty−cycle and the discontinuous mode operation:

$$Pmax := \frac{Tsw^2 \cdot Vinmin^2 \cdot Vr^2 \cdot \eta \cdot Fsw}{(2 \cdot Lpmax \cdot Vr^2 + 4 \cdot Lpmax \cdot Vr \cdot Vinmin + 2 \cdot Lpmax \cdot Vinmin^2)} \quad \text{(eq. 23)}$$

From Equation 22 we obtain the operating duty−cycle $d = \frac{Ip \cdot Lp}{Vin \cdot Tsw}$ (eq. 24) which lets us calculate the RMS current circulating in the MOSFET:

$IdRMS = Ip \cdot \sqrt{\frac{d}{3}}$ (eq. 25) . From this equation, we obtain the average dissipation in the MOSFET: $Pavg = \frac{1}{3} \cdot Ip^2 \cdot d \cdot R_{DSon}$ (eq. 26) to which switching losses shall be added.

If we stick to Equation 23, compute Lp and follow the above calculations, we will discover that a power supply built with the NCP101X and operating from a 100 Vac line minimum will not be able to deliver more than 7.0 W continuous, regardless of the selected switching frequency (however the transformer core size will go down as Fswitching is increased). This number increases significantly when operated from a single European mains (18 W). Application note AND8125/D, “Evaluating the Power Capability of the NCP101X Members” details how to assess the available power budget from all the NCP101X series.

Example 1. A 12 V 7.0 W SMPS operating on a large mains with NCP101X:

Vin = 100 Vac to 250 Vac or 140 Vdc to 350 Vdc once rectified, assuming a low bulk ripple

Efficiency = 80%

Vout = 12 V, Iout = 580 mA

Fswitching = 65 kHz

Ip max = 350 mA – 10% = 315 mA

Applying the above equations leads to:

Selected maximum reflected voltage = 120 V

with Vout = 12 V, secondary drop = 0.5 V → Np:Ns = 1:0.1

Lp critical = 3.2 mH

Ip = 292 mA

Duty−cycle worse case = 50%

Idrain RMS = 119 mA

P_{MOSFET} = 354 mW at R_{DSon} = 24 Ω (T_J > 100°C)

P_{DSS} = 1.1 mA x 350 V = 385 mW, if DSS is used

Secondary diode voltage stress = (350 x 0.1) + 12 = 47 V (e.g. a MBRS360T3, 3.0 A/60 V would fit)

Example 2. A 12 V 16 W SMPS operating on narrow European mains with NCP101X:

Vin = 230 Vac ± 15%, 276 Vdc for Vin min to 370 Vdc once rectified

Efficiency = 80%

Vout = 12 V, Iout = 1.25 A

Fswitching = 65 kHz

Ip max = 350 mA – 10% = 315 mA

Applying the equations leads to:

Selected maximum reflected voltage = 250 V

with Vout = 12 V, secondary drop = 0.5 V → Np:Ns = 1:0.05

Lp = 6.6 mH

Ip = 0.305 mA

Duty−cycle worse case = 0.47

Idrain RMS = 121 mA

P_{MOSFET} = 368 mW at R_{DSon} = 24 Ω (T_J > 100°C)

P_{DSS} = 1.1 mA x 370 V = 407 mW, if DSS is used below an ambient of 50°C.

Secondary diode voltage stress = (370 x 0.05) + 12 = 30.5 V (e.g. a MBRS340T3, 3.0 A/40 V)

Please note that these calculations assume a flat DC rail whereas a 10 ms ripple naturally affects the final voltage available on the transformer end. Once the Bulk capacitor has been selected, one should check that the resulting ripple (min Vbulk?) is still compatible with the above calculations. As an example, to benefit from the largest operating range, a 7.0 W board was built with a 47 μF bulk capacitor which ensured discontinuous operation even in the ripple minimum waves.

DISCONTINUED
THIS DEVICE IS NOT RECOMMENDED FOR NEW DESIGN
PLEASE CONTACT YOUR onsemi
REPRESENTATIVE FOR INFORMATION

MOSFET Protection

As in any Flyback design, it is important to limit the drain excursion to a safe value, e.g. below the MOSFET BV_{DSS} which is 700 V. Figure 29 presents possible implementations:

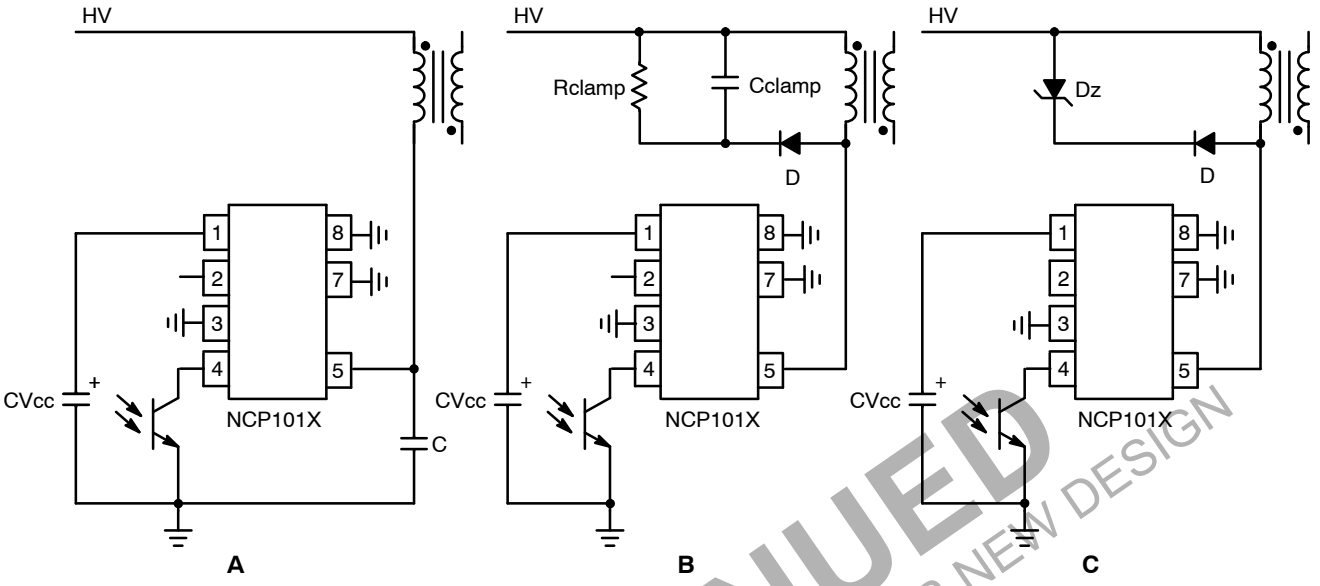

Figure 29. Different Options to Clamp the Leakage Spike

Figure 29A: The simple capacitor limits the voltage according to Equation 15. This option is only valid for low power applications, e.g. below 5.0 W, otherwise chances exist to destroy the MOSFET. After evaluating the leakage inductance, you can compute C with Equation 15. Typical values are between 100 pF and up to 470 pF. Large capacitors increase capacitive losses.

Figure 29B: This diagram illustrates the most standard circuitry called the RCD network. Rclamp and Cclamp are calculated using the following formulas:

$$Rclamp = \frac{2 \cdot Vclamp \cdot (Vclamp - (Vout + Vf\,sec) \cdot N)}{Lleak \cdot Ip^2 \cdot Fsw} \quad \text{(eq. 27)}$$

$$Cclamp = \frac{Vclamp}{Vripple \cdot Fsw \cdot Rclamp} \quad \text{(eq. 28)}$$

Vclamp is usually selected 50−80 V above the reflected value N x (Vout + Vf). The diode needs to be a fast one and a MUR160 represents a good choice. One major drawback of the RCD network lies in its dependency upon the peak current. Worse case occurs when Ip and Vin are maximum and Vout is close to reach the steady−state value.

Figure 29C: This option is probably the most expensive of all three but it offers the best protection degree. If you need a very precise clamping level, you must implement a Zener diode or a TVS. There are little technology differences behind a standard Zener diode and a TVS. However, the die area is far bigger for a transient suppressor than that of Zener. A 5.0 W Zener diode like the 1N5388B will accept 180 W peak power if it lasts less than 8.3 ms. If the peak current in the worse case (e.g. when the PWM circuit maximum current limit works) multiplied by the nominal Zener voltage exceeds these 180 W, then the diode will be destroyed when the supply experiences overloads. A transient suppressor like the P6KE200 still dissipates 5.0 W of continuous power but is able to accept surges up to 600 W @ 1.0 ms. Select the Zener or TVS clamping level between 40 to 80 V above the reflected output voltage when the supply is heavily loaded.

DISCONTINUED
THIS DEVICE IS NOT RECOMMENDED FOR NEW DESIGN
PLEASE CONTACT YOUR onsemi
REPRESENTATIVE FOR INFORMATION

Typical Application Examples

A 6.5 W NCP1012−Based Flyback Converter

Figure 30 shows a converter built with a NCP1012 delivering 6.5 W from a universal input. The board uses the Dynamic Self−Supply and a simplified Zener−type feedback. This configuration was selected for cost reasons and a more precise circuitry can be used, e.g. based on a TL431:

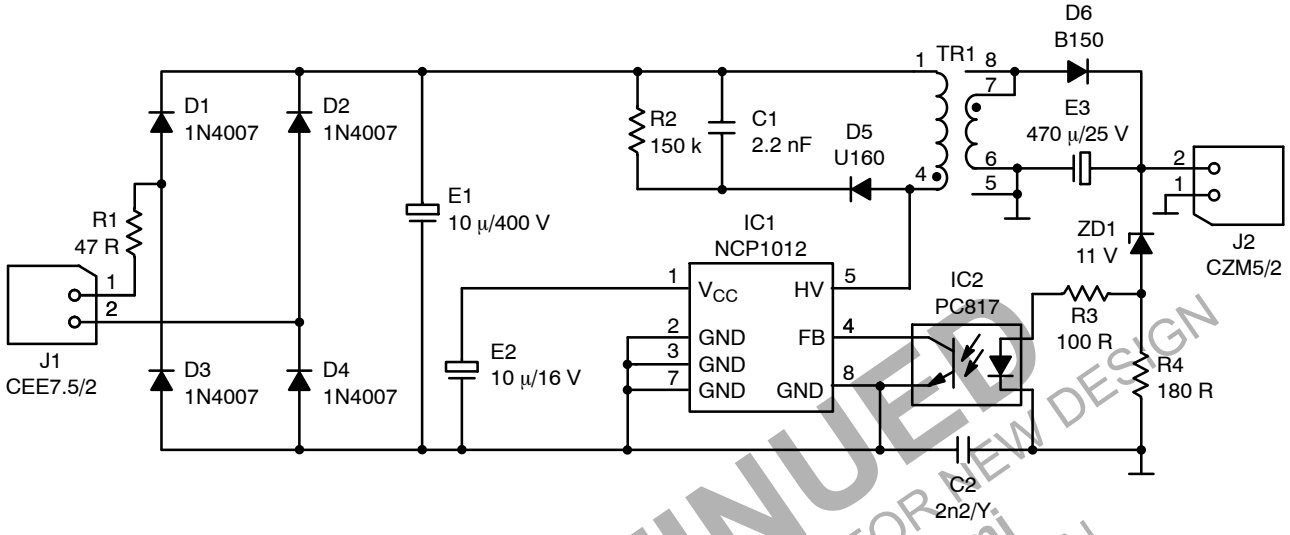

Figure 30. An NCP1012−Based Flyback Converter Delivering 6.5 W

The converter built according to Figure 31 layouts, gave the following results:

- Efficiency at Vin = 100 Vac and Pout = 6.5 W = 75.7%
- Efficiency at Vin = 230 Vac and Pout = 6.5 W = 76.5%

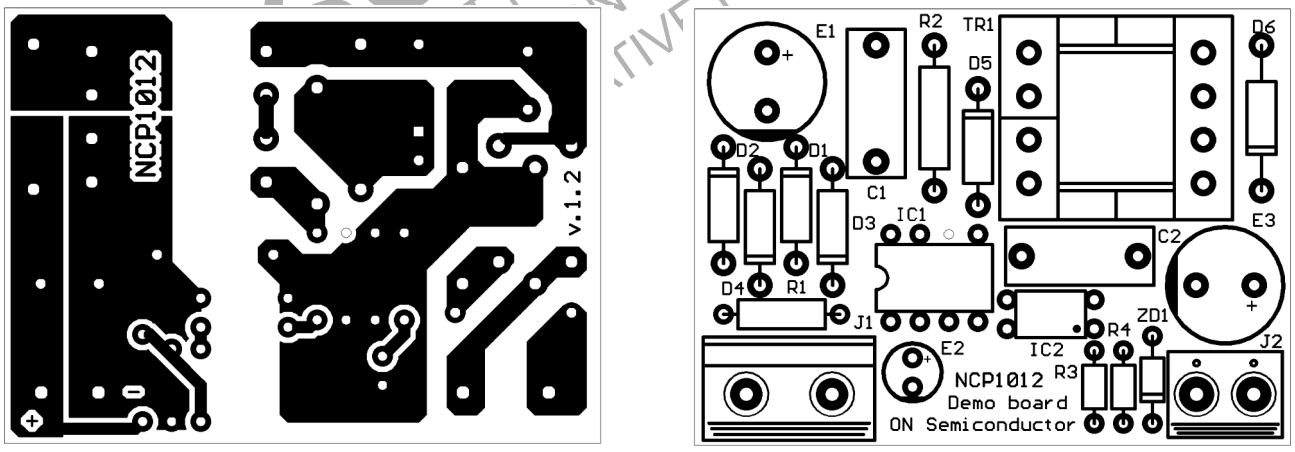

Figure 31. The NCP1012−Based PCB Layout . . . and its Associated Component Placement

CONTINUED
RECOMMENDED FOR NEW DESIGN
CONTACT YOUR onsemi
FOR INFORMATION

A 7.0 W NCP1013−based Flyback Converter Featuring Low Standby Power

Figure 32 depicts another typical application showing a NCP1013−65 kHz operating in a 7.0 W converter up to 70°C of ambient temperature. We can increase the output power since an auxiliary winding is used, the DSS is disabled, and thus offering more room for the MOSFET. In this application, the feedback is made via a TLV431 whose low bias current (100 μA min) helps to lower the no−load standby power.

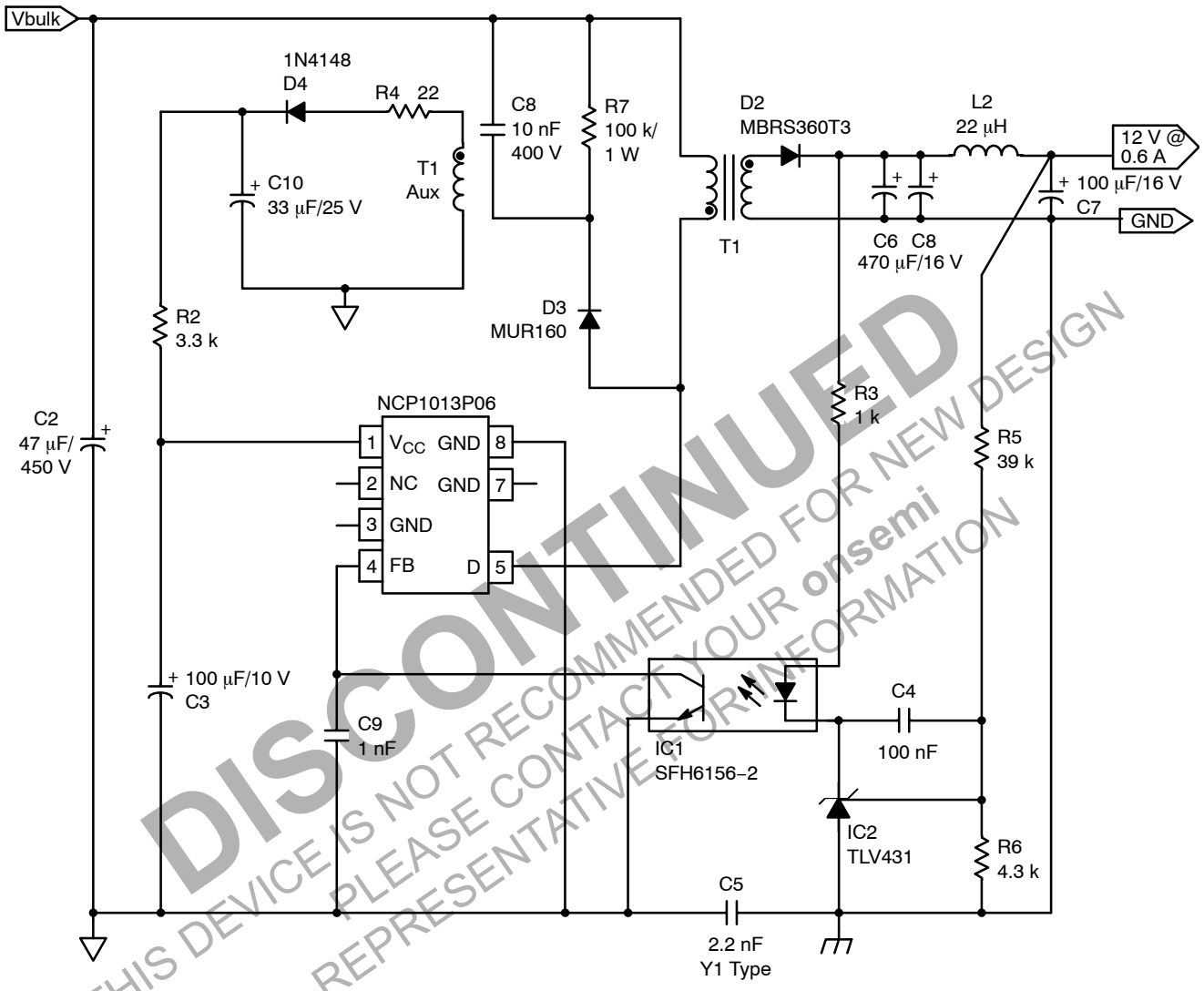

DISCONTINUED
THIS DEVICE IS NOT RECOMMENDED FOR NEW DESIGN
PLEASE CONTACT YOUR onsemi
REPRESENTATIVE FOR INFORMATION

Figure 32. A Typical Converter Delivering 7.0 W from a Universal Mains

Measurements have been taken from a demonstration board implementing the diagram in Figure 32 and the following results were achieved, with either the auxiliary winding in place or through the Dynamic Self−Supply:

Vin = 230 Vac, auxiliary winding, Pout = 0, Pin = 60 mW

Vin = 100 Vac, auxiliary winding, Pout = 0, Pin = 42 mW

Vin = 230 Vac, Dynamic Self−Supply, Pout = 0, Pin = 300 mW

Vin = 100 Vac, Dynamic Self−Supply, Pout = 0, Pin = 130 mW

Pout = 7.0 W, η = 81% @ 230 Vac, with auxiliary winding

Pout = 7.0 W, η = 81.3 @ 100 Vac, with auxiliary winding

For a quick evaluation of Figure 32 application example, the following transformers are available from Coilcraft:

A9619−C, Lp = 3.0 mH, Np:Ns = 1:0.1, 7.0 W application on universal mains, including auxiliary winding, NCP1013−65kHz.

A0032−A, Lp = 6.0 mH, Np:Ns = 1:0.055, 10 W application on European mains, DSS operation only, NCP1013−65 kHz.

Coilcraft
1102 Silver Lake Road
CARY IL 60013
Email: info@coilcraft.com
Tel.: 847−639−6400
Fax.: 847−639−1469

ORDERING INFORMATION

Device Order Number	Frequency (kHz)	Package Type	Shipping†	R_{DSon} (Ω)	Ipk (mA)
NCP1010AP065G	65	PDIP−7 (Pb−Free)	50 Units / Rail	23	100
NCP1010AP100G	100			23	100
NCP1010AP130G	130			23	100
NCP1010ST65T3G	65	SOT−223 (Pb−Free)	4000 / Tape & Reel	23	100
NCP1010ST100T3G	100			23	100
NCP1010ST130T3G	130			23	100
NCP1011AP065G	65	PDIP−7 (Pb−Free)	50 Units / Rail	23	250
NCP1011AP100G	100		50 Units / Rail	23	250
NCP1011AP130G	130			23	250
NCP1011ST65T3G	65	SOT−223 (Pb−Free)	4000 / Tape & Reel	23	250
NCP1011ST100T3G	100			23	250
NCP1011ST130T3G	130			23	250
NCP1012AP065G	65	PDIP−7 (Pb−Free)	50 Units / Rail	11	250
NCP1012AP100G	100		50 Units / Rail	11	250
NCP1012AP133G	130		50 Units / Rail	11	250
NCP1012ST65T3G	65	SOT−223 (Pb−Free)	4000 / Tape & Reel	11	250
NCP1012ST100T3G	100			11	250
NCP1012ST130T3G	130		4000 / Tape & Reel	11	250
NCP1013AP065G	65	PDIP−7 (Pb−Free)	50 Units / Rail	11	350
NCP1013AP100G	100			11	350
NCP1013AP133G	130			11	350
NCP1013ST65T3G	65	SOT−223 (Pb−Free)	4000 / Tape & Reel	11	350
NCP1013ST100T3G	100			11	350
NCP1013ST130T3G	130			11	350
NCP1014AP065G	65	PDIP−7 (Pb−Free)	50 Units / Rail	11	450
NCP1014AP100G	100		50 Units / Rail	11	450
NCP1014ST65T3G	65	SOT−223 (Pb−Free)	4000 / Tape & Reel	11	450
NCP1014ST100T3G	100			11	450

†For information on tape and reel specifications, including part orientation and tape sizes, please refer to our Tape and Reel Packaging Specifications Brochure, BRD8011/D.

DISCONTINUED
THIS DEVICE IS NOT RECOMMENDED FOR NEW DESIGN
PLEASE CONTACT YOUR onsemi
REPRESENTATIVE FOR INFORMATION



PDIP−7 (PDIP−8 LESS PIN 6)
CASE 626A
ISSUE C

DATE 22 APR 2015

SCALE 1:1

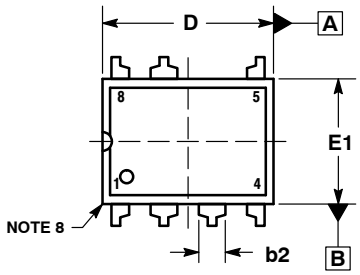

TOP VIEW

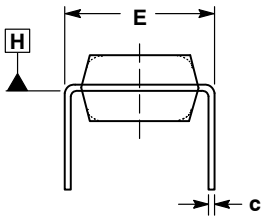

END VIEW
WITH LEADS CONSTRAINED
NOTE 5

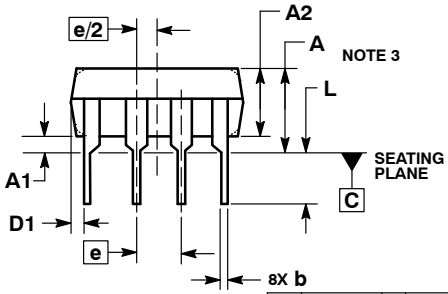

SIDE VIEW

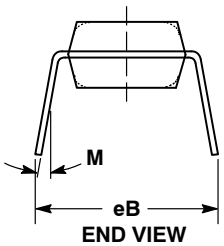

END VIEW
NOTE 6

NOTES:
1. DIMENSIONING AND TOLERANCING PER ASME Y14.5M, 1994.
2. CONTROLLING DIMENSION: INCHES.
3. DIMENSIONS A, A1 AND L ARE MEASURED WITH THE PACKAGE SEATED IN JEDEC SEATING PLANE GAUGE GS−3.
4. DIMENSIONS D, D1 AND E1 DO NOT INCLUDE MOLD FLASH OR PROTRUSIONS. MOLD FLASH OR PROTRUSIONS ARE NOT TO EXCEED 0.10 INCH.
5. DIMENSION E IS MEASURED AT A POINT 0.015 BELOW DATUM PLANE H WITH THE LEADS CONSTRAINED PERPENDICULAR TO DATUM C.
6. DIMENSION eB IS MEASURED AT THE LEAD TIPS WITH THE LEADS UNCONSTRAINED.
7. DATUM PLANE H IS COINCIDENT WITH THE BOTTOM OF THE LEADS, WHERE THE LEADS EXIT THE BODY.
8. PACKAGE CONTOUR IS OPTIONAL (ROUNDED OR SQUARE CORNERS).

	INCHES		MILLIMETERS	
DIM	MIN	MAX	MIN	MAX
A	----	0.210	---	5.33
A1	0.015	----	0.38	---
A2	0.115	0.195	2.92	4.95
b	0.014	0.022	0.35	0.56
b2	0.060 TYP		1.52 TYP	
C	0.008	0.014	0.20	0.36
D	0.355	0.400	9.02	10.16
D1	0.005	----	0.13	---
E	0.300	0.325	7.62	8.26
E1	0.240	0.280	6.10	7.11
e	0.100 BSC		2.54 BSC	
eB	----	0.430	---	10.92
L	0.115	0.150	2.92	3.81
M	----	10°	---	10°

GENERIC MARKING DIAGRAM*

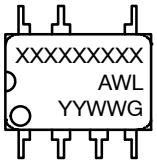

XXXX = Specific Device Code
A = Assembly Location
WL = Wafer Lot
YY = Year
WW = Work Week
G = Pb−Free Package

*This information is generic. Please refer to device data sheet for actual part marking. Pb−Free indicator, “G” or microdot “ ▪”, may or may not be present.

DOCUMENT NUMBER:	**98AON11774D**	Electronic versions are uncontrolled except when accessed directly from the Document Repository. Printed versions are uncontrolled except when stamped “CONTROLLED COPY” in red.	
DESCRIPTION:	**PDIP−7 (PDIP−8 LESS PIN 6)**		**PAGE 1 OF 1**

ON Semiconductor and ON are trademarks of Semiconductor Components Industries, LLC dba ON Semiconductor or its subsidiaries in the United States and/or other countries. ON Semiconductor reserves the right to make changes without further notice to any products herein. ON Semiconductor makes no warranty, representation or guarantee regarding the suitability of its products for any particular purpose, nor does ON Semiconductor assume any liability arising out of the application or use of any product or circuit, and specifically disclaims any and all liability, including without limitation special, consequential or incidental damages. ON Semiconductor does not convey any license under its patent rights nor the rights of others.

© Semiconductor Components Industries, LLC, 2019

PDIP–7, GULL WING
CASE 626AA
ISSUE A

DATE 17 DEC 2019



SCALE 1:1

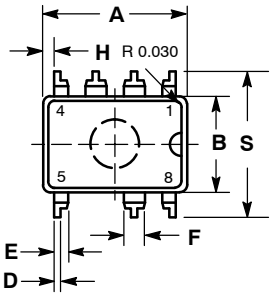

TOP VIEW

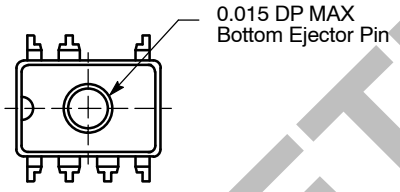

BOTTOM VIEW

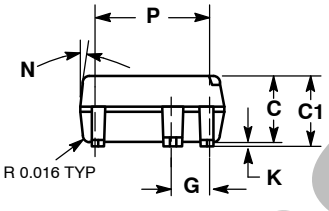

SIDE VIEW

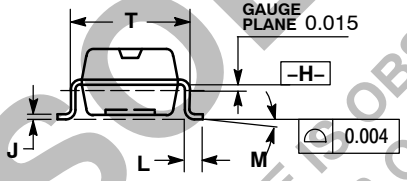

FRONT VIEW

NOTES:
1. DIMENSIONS AND TOLERANCING PER ASME Y14.5M, 1994.
2. DIMENSIONS IN INCHES.

	INCHES	
DIM	MIN	MAX
A	0.365	0.385
B	0.240	0.260
C	0.120	0.150
C1	0.124	0.162
D	0.018 TYP	
E	0.039 TYP	
F	0.045	0.065
G	0.100 BSC	
H	0.023	0.033
J	0.010 TYP	
K	0.004	0.012
L	0.036	0.044
M	0 °	8 °
N	12 ° TYP	
P	0.300 BSC	
S	0.372	0.388

GENERIC MARKING DIAGRAM*

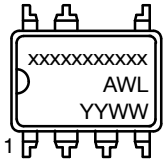

xxxxxxx = Specific Device Code
A = Assembly Location
WL = Wafer Lot
YY = Year
WW = Work Week

*This information is generic. Please refer to device data sheet for actual part marking. Pb–Free indicator, “G” or microdot “ ▪”, may or may not be present.

OBSOLETE
THIS DEVICE IS OBSOLETE
PLEASE CONTACT YOUR ON SEMICONDUCTOR
REPRESENTATIVE FOR INFORMATION

ISSUE	REVISION	DATE
O	RELEASED FOR PRODUCTION. REQ. BY L. TESAR.	24 MAY 2004
A	OBSOLETED.	17 DEC 2019

OBSOLETE
THIS DEVICE IS OBSOLETE
PLEASE CONTACT YOUR ON SEMICONDUCTOR
REPRESENTATIVE FOR INFORMATION

ON Semiconductor and ON are registered trademarks of Semiconductor Components Industries, LLC (SCILLC). SCILLC reserves the right to make changes without further notice to any products herein. SCILLC makes no warranty, representation or guarantee regarding the suitability of its products for any particular purpose, nor does SCILLC assume any liability arising out of the application or use of any product or circuit, and specifically disclaims any and all liability, including without limitation special, consequential or incidental damages. "Typical" parameters which may be provided in SCILLC data sheets and/or specifications can and do vary in different applications and actual performance may vary over time. All operating parameters, including "Typicals" must be validated for each customer application by customer's technical experts. SCILLC does not convey any license under its patent rights nor the rights of others. SCILLC products are not designed, intended, or authorized for use as components in systems intended for surgical implant into the body, or other applications intended to support or sustain life, or for any other application in which the failure of the SCILLC product could create a situation where personal injury or death may occur. Should Buyer purchase or use SCILLC products for any such unintended or unauthorized application, Buyer shall indemnify and hold SCILLC and its officers, employees, subsidiaries, affiliates, and distributors harmless against all claims, costs, damages, and expenses, and reasonable attorney fees arising out of, directly or indirectly, any claim of personal injury or death associated with such unintended or unauthorized use, even if such claim alleges that SCILLC was negligent regarding the design or manufacture of the part. SCILLC is an Equal Opportunity/Affirmative Action Employer. This literature is subject to all applicable copyright laws and is not for resale in any manner.

onsemi, , and other names, marks, and brands are registered and/or common law trademarks of Semiconductor Components Industries, LLC dba "**onsemi**" or its affiliates and/or subsidiaries in the United States and/or other countries. **onsemi** owns the rights to a number of patents, trademarks, copyrights, trade secrets, and other intellectual property. A listing of **onsemi**'s product/patent coverage may be accessed at www.onsemi.com/site/pdf/Patent−Marking.pdf. **onsemi** reserves the right to make changes at any time to any products or information herein, without notice. The information herein is provided "as−is" and **onsemi** makes no warranty, representation or guarantee regarding the accuracy of the information, product features, availability, functionality, or suitability of its products for any particular purpose, nor does **onsemi** assume any liability arising out of the application or use of any product or circuit, and specifically disclaims any and all liability, including without limitation special, consequential or incidental damages. Buyer is responsible for its products and applications using **onsemi** products, including compliance with all laws, regulations and safety requirements or standards, regardless of any support or applications information provided by **onsemi**. "Typical" parameters which may be provided in **onsemi** data sheets and/or specifications can and do vary in different applications and actual performance may vary over time. All operating parameters, including "Typicals" must be validated for each customer application by customer's technical experts. **onsemi** does not convey any license under any of its intellectual property rights nor the rights of others. **onsemi** products are not designed, intended, or authorized for use as a critical component in life support systems or any FDA Class 3 medical devices or medical devices with a same or similar classification in a foreign jurisdiction or any devices intended for implantation in the human body. Should Buyer purchase or use **onsemi** products for any such unintended or unauthorized application, Buyer shall indemnify and hold **onsemi** and its officers, employees, subsidiaries, affiliates, and distributors harmless against all claims, costs, damages, and expenses, and reasonable attorney fees arising out of, directly or indirectly, any claim of personal injury or death associated with such unintended or unauthorized use, even if such claim alleges that **onsemi** was negligent regarding the design or manufacture of the part. **onsemi** is an Equal Opportunity/Affirmative Action Employer. This literature is subject to all applicable copyright laws and is not for resale in any manner.

ADDITIONAL INFORMATION

TECHNICAL PUBLICATIONS:
Technical Library: www.onsemi.com/design/resources/technical−documentation
onsemi Website: www.onsemi.com

ONLINE SUPPORT: www.onsemi.com/support
For additional information, please contact your local Sales Representative at www.onsemi.com/support/sales