NCP382

Fixed Current-Limiting Power-Distribution Switches

The NCP382 is a single input dual outputs high side power−distribution switch designed for applications where heavy capacitive loads and short−circuits are likely to be encountered. The device includes an integrated 80 mΩ, P−channel MOSFET. The device limits the output current to a desired level by switching into a constant−current mode when the output load exceeds the current−limit threshold or a short is present. The current−limit threshold is internally fixed. The power−switches rise and fall times are controlled to minimize current ringing during switching.

The $\overline{\text{FLAG}}$ logic output asserts low during overcurrent or overtemperature conditions. The switch is controlled by a logic enable input active high or low.

Features

- 2.5 V – 5.5 V Operating Range
- 80 mΩ High−Side MOSFET
- Current Limit: Fixed 500 mA, 1 A, 1.5 A and 2 A
- Undervoltage Lock−Out (UVLO)
- Soft−Start Prevents Inrush Current
- Thermal Protection
- Soft Turn−Off
- Enable Active High or Low (EN or $\overline{\text{EN}}$)
- Compliance to IEC61000−4−2 (Level 4)
  - 8.0 kV (Contact)
  - 15 kV (Air)
- UL Listed for SOIC package (NCP382xDxxxx) − File No. E343275
- IEC60950 − Edition 2 − for SOIC package (NCP382xDxxxx) − Amendments 1 & 2 Certified (CB Scheme)
- These are Pb−Free Devices

Typical Applications

- Laptops
- USB Ports/Hubs
- TVs

ON Semiconductor®

www.onsemi.com

MARKING DIAGRAMS



DFN8 3x3
CASE 506BW

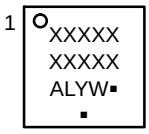



SOIC−8 NB
CASE 751

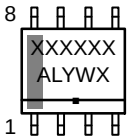

XXXXX	= Specific Device Code
A	= Assembly Location
L	= Wafer Lot
Y	= Year
W	= Work Week
▪	= Pb−Free Package

(Note: Microdot may be in either location)

ORDERING INFORMATION

See detailed ordering and shipping information in the package dimensions section on page 10 of this data sheet.

© Semiconductor Components Industries, LLC, 2016

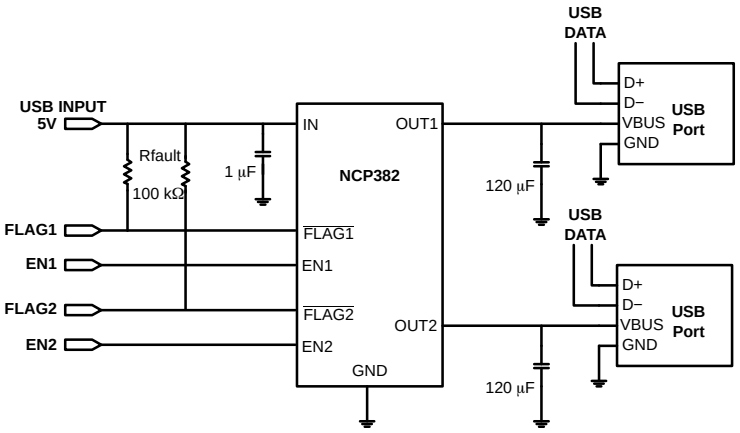

Figure 1. Typical Application Circuit

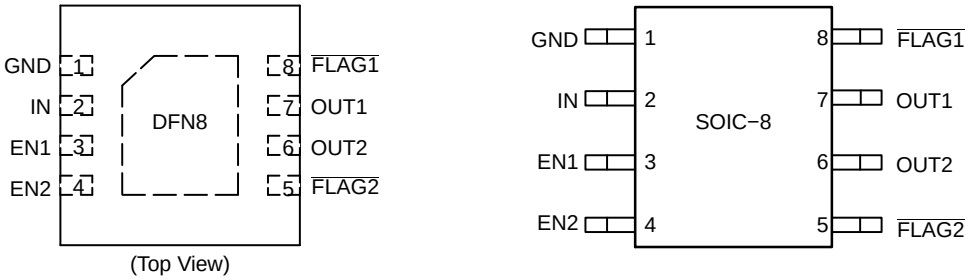

Figure 2. Pin Connections

PIN FUNCTION DESCRIPTION

Pin Name	Type	Description
EN1	I	Enable 1 input, logic low/high (i.e. $\overline{EN}$ or EN) turns on power switch.
EN2	I	Enable 2 input, logic low/high (i.e. $\overline{EN}$ or EN) turns on power switch.
GND	P	Ground connection.
IN	P	Power−switch input voltage; connect a 1 μF or greater ceramic capacitor from IN to GND as close as possible to the IC.
$\overline{FLAG1}$	O	Active−low open−drain output 1, asserted during overcurrent or overtemperature conditions. Connect a 10 kΩ or greater resistor pull−up, otherwise leave unconnected.
$\overline{FLAG2}$	O	Active−low open−drain output 2, asserted during overcurrent or overtemperature conditions. Connect a 10 kΩ or greater resistor pull−up, otherwise leave unconnected.
OUT1	O	Power−switch output1; connect a 1 μF ceramic capacitor from OUT1 to GND, as close as possible to the IC. This minimum value is recommended for USB requirement in terms of load transient response and strong short circuits.
OUT2	O	Power−switch output2; connect a 1 μF ceramic capacitor from OUT2 to GND, as close as possible to the IC. This minimum value is recommended for USB requirement in terms of load transient response and strong short circuits.

MAXIMUM RATINGS

Rating	Symbol	Value	Unit
From IN to OUT1, From IN to OUT2 Supply Voltage (Note 1)	V_{IN} , V_{OUT1},V_{OUT2}	−7.0 to +7.0	V
IN, OUT1,OUT2, EN1, EN2, $\overline{FLAG1}$, $\overline{FLAG2}$ (Note 1)	V_{IN}, V_{OUT1}, V_{OUT2}, V_{EN1}, V_{EN2}, V_{FLAG1}, V_{FLAG2}	−0.3 to +7.0	V
$\overline{FLAG1}$, $\overline{FLAG2}$ sink current	I_{SINK}	1.0	mA
ESD Withstand Voltage (IEC 61000−4−2) (output only, when bypassed with 1.0 μF capacitor minimum)	ESD IEC	15 Air, 8 contact	kV
Human Body Model (HBM) ESD Rating are (Note 2)	ESD HBM	2000	V
Machine Model (MM) ESD Rating are (Note 2)	ESD MM	200	V
Latch−up protection (Note 3) − Pins IN, OUT1, OUT2, $\overline{FLAG1}$, $\overline{FLAG2}$ − EN1, EN2	LU	100	mA
Maximum Junction Temperature (Note 4)	T_J	−40 to + TSD	°C
Storage Temperature Range	T_{STG}	−40 to + 150	°C
Moisture Sensitivity (Note 5)	MSL	Level 1	

Stresses exceeding those listed in the Maximum Ratings table may damage the device. If any of these limits are exceeded, device functionality should not be assumed, damage may occur and reliability may be affected.

1. According to JEDEC standard JESD22−A108.
2. This device series contains ESD protection and passes the following tests:
   Human Body Model (HBM) +/−2.0 kV per JEDEC standard: JESD22−A114 for all pins.
   Machine Model (MM) +/−200 V per JEDEC standard: JESD22−A115 for all pins.
3. Latch up Current Maximum Rating: ±100 mA per JEDEC standard: JESD78 class II.
4. A thermal shutdown protection avoids irreversible damage on the device due to power dissipation.
5. Moisture Sensitivity Level (MSL): 1 per IPC/JEDEC standard: J−STD−020.

OPERATING CONDITIONS

Symbol	Parameter	Conditions		Min	Typ	Max	Unit
V_{IN}	Operational Power Supply			2.5		5.5	V
V_{ENX}	Enable Voltage			0		5.5	
T_A	Ambient Temperature Range			−40	25	+85	°C
I_{SINK}	$\overline{FLAG}$ sink current					1	mA
C_{IN}	Decoupling input capacitor			1			μF
C_{OUTX}	Decoupling output capacitor	USB port per Hub		120			μF
$R_{\theta JA}$	Thermal Resistance Junction−to−Air	DFN−8 package (Notes 6 and 7)			140		°C/W
		SOIC−8 package (Notes 6 and 7)			210		°C/W
T_J	Junction Temperature Range			−40	25	+125	°C
I_{OUTX}	Recommended Maximum DC current	DFN−8 package				2	A
		SOIC−8 package				1.5	A
P_D	Power Dissipation Rating (Note 8)	$T_A \leq 25°C$	DFN−8 package	850			mW
			SOIC−8 package	570			mW
		$T_A = 85°C$	DFN−8 package	428			mW
			SOIC−8 package	285			mW

6. A thermal shutdown protection avoids irreversible damage on the device due to power dissipation.
7. The $R_{\theta JA}$ is dependent of the PCB heat dissipation. Announced thermal resistance is the unless PCB dissipation and can be improve with final PCB layout.
8. The maximum power dissipation (P_D) is given by the following formula:

$$P_D = \frac{T_{JMAX} - T_A}{R_{\theta JA}}$$

ELECTRICAL CHARACTERISTICS Min & Max Limits apply for T_A between −40°C to +85°C and T_J up to + 125°C for V_{IN} between 2.5 V to 5.5 V (Unless otherwise noted). Typical values are referenced to T_A = + 25°C and V_{IN} = 5 V.

Symbol	Parameter	Conditions		Min	Typ	Max	Unit
POWER SWITCH							
$R_{DS(on)}$	Static drain−source on−state resistance (SOIC−8 Package)	T_J = 25°C, V_{IN} = 3.6 V to 5 V			80	110	mΩ
		V_{IN} = 5 V	–40°C < T_J < 125°C			140	
$R_{DS(on)}$	Static drain−source on−state resistance (DFN8 Package)	T_J = 25°C, V_{IN} = 3.6 V to 5 V			80	95	mΩ
		V_{IN} = 5 V	–40°C < T_J < 125°C			100	
T_R	Output rise time	V_{IN} = 5 V	C_{LOAD} = 1 μF, R_{LOAD} = 100 Ω (Note 9)	0.3	1.0	1.5	ms
		V_{IN} = 2.5 V		0.2	0.65	1.0	
T_F	Output fall time	V_{IN} = 5 V		0.1		0.5	
		V_{IN} = 2.5 V		0.1		0.5	
ENABLE INPUT ENx OR $\overline{EN}$x							
V_{IH}	High−level input voltage			1.2			V
V_{IL}	Low−level input voltage					0.4	V
I_{ENx}	Input current	V_{ENx} = 0 V, $V_{\overline{ENx}}$ = 5 V		−0.5		0.5	μA
T_{ON}	Turn on time	C_{LOAD} = 1 μF, R_{LOAD} = 100 Ω (Note 9)		1.0		3.0	ms
T_{OFF}	Turn off time			1.0		3.0	ms
CURRENT LIMIT							
I_{OCP}	Current−limit threshold (Maximum DC output current I_{OUTX} delivered to load)	V_{IN} = 5 V, Fixed 0.5 A		0.5	0.6	0.7	A
		V_{IN} = 5 V, Fixed 1.0 A		1.0	1.2	1.4	
		V_{IN} = 5 V, Fixed 1.5 A		1.5	1.75	2.0	
		V_{IN} = 5 V, Fixed 2 A		2	2.25	2.5	
T_{DET}	Response time to short circuit	V_{IN} = 5 V			2.0		μs
T_{REG}	Regulation time			2.0	3.0	4.0	ms
T_{OCP}	Over current protection time			14	20	26	ms
UNDERVOLTAGE LOCKOUT							
V_{UVLO}	IN pin low−level input voltage	V_{IN} rising		2.0	2.35	2.5	V
V_{HYST}	IN pin hysteresis	T_J = 25°C		25	40	60	mV
T_{RUVLO}	Re−arming Time	V_{IN} rising		5.0	10	15	ms
SUPPLY CURRENT							
I_{INOFF}	Low−level output supply current	V_{IN} = 5 V, No load on OUTX, Device OFF V_{ENX} = 0 V or $V_{\overline{ENX}}$ = 5 V			2.0	3.0	μA
I_{INON}	High−level output supply current	0.5 A	T_J = 25°C T_J = 85°C			95 100	μA
		1 and 1.5 A	T_J = 25°C T_J = 85°C			115 125	
		2 A	T_J = 25°C T_J = 85°C			130 140	
I_{REV}	Reverse leakage current	V_{OUTX} = 5 V, V_{IN} = 0 V	T_J = 25°C		1.0	2.0	μA
$\overline{FLAG}$ PIN							
V_{OL}	$\overline{FLAG}$X output low voltage	$I_{\overline{FLAGX}}$ = 1 mA				400	mV
I_{LEAK}	Off−state leakage	$V_{\overline{FLAGX}}$ = 5 V			0.02	1	μA
T_{FLG}	$\overline{FLAG}$X deglitch	$\overline{FLAGX}$ de−assertion time due to overcurrent		4	6	9	ms
T_{FOCP}	$\overline{FLAG}$X deglitch	$\overline{FLAGX}$ assertion due to overcurrent		6	8	12	ms
THERMAL SHUTDOWN							
T_{SD}	Thermal shutdown threshold				140		°C
T_{SDOCP}	Thermal regulation threshold				125		°C
T_{RSD}	Thermal regulation rearming threshold				115		°C

9. Parameters are guaranteed for C_{LOAD} and R_{LOAD} connected to the OUTX pin with respect to the ground.
10. DFN package only.
11. Guaranteed by characterization.

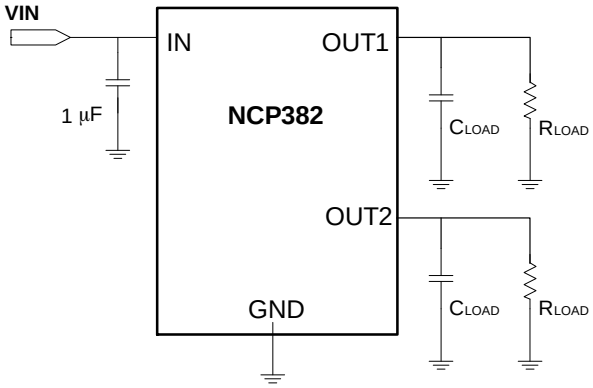

Figure 3. Test Configuration

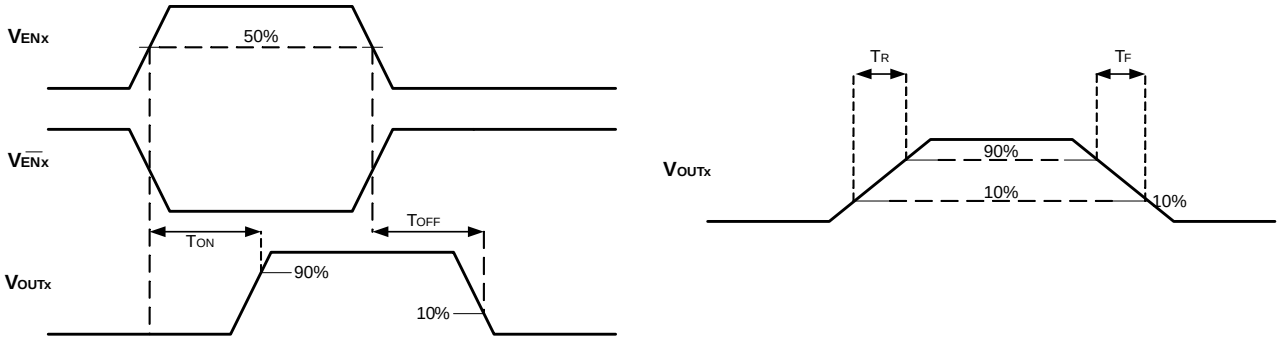

Figure 4. Voltage Waveform

BLOCK DIAGRAM

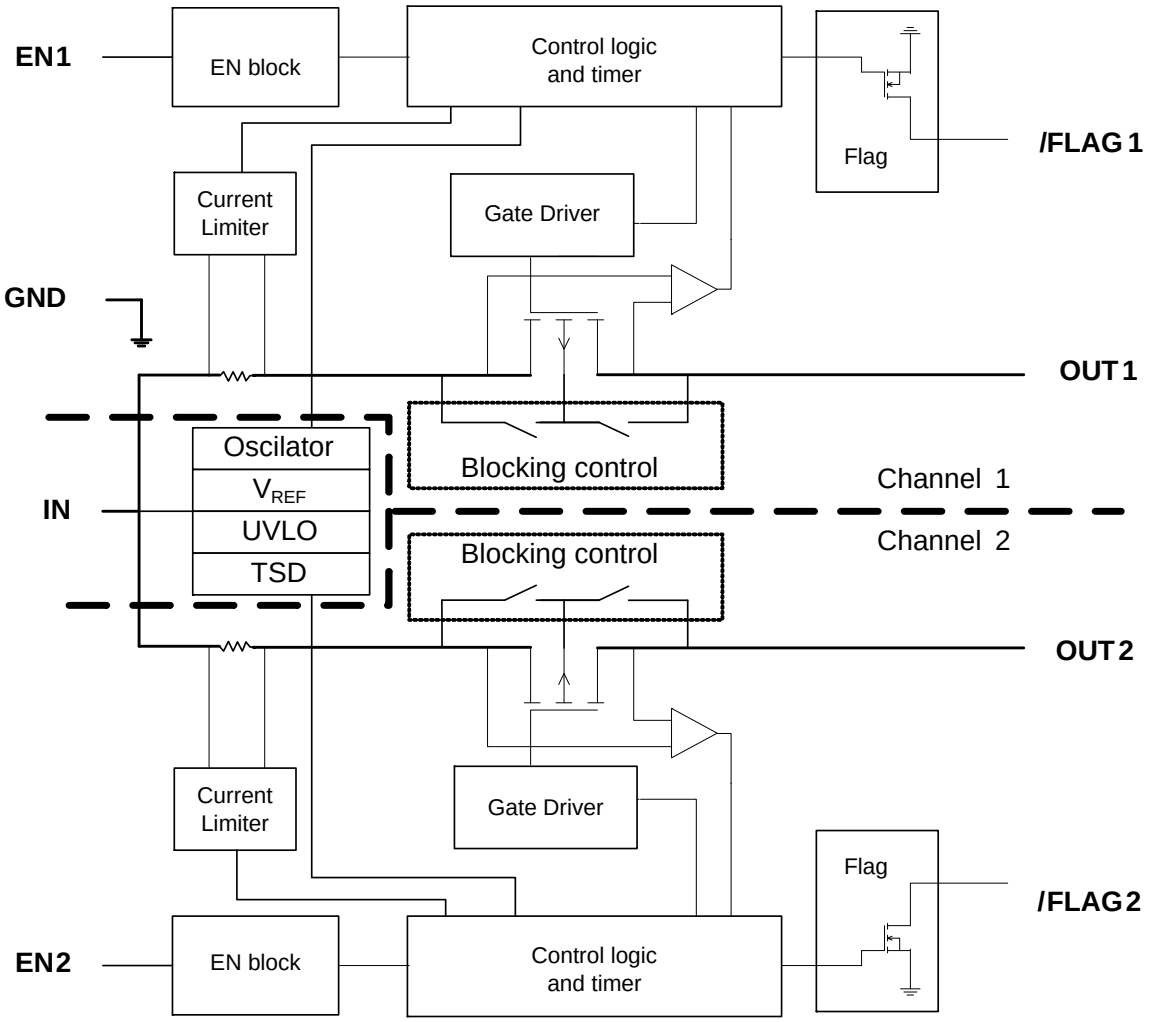

Figure 5. Block Diagram

FUNCTIONAL DESCRIPTION

Overview

The NCP382 is a dual high side power distribution switches designed to protect the input supply voltage in case of heavy capacitive loads, short circuit or over current. In addition, the high side MOSFETs are turned off during undervoltage or thermal shutdown condition. Thanks to the soft start circuitry, NCP382 is able to limit large current and voltage surges.

Overcurrent Protection

NCP382 switches into a constant current regulation mode when the output current is above the I_{OCP} threshold. Depending on the load, the output voltage is decreased accordingly.

- In case of hot plug with heavy capacitive load, the output voltage is brought down to the capacitor voltage. The NCP382 will limit the current to the I_{OCP} threshold value until the charge of the capacitor is completed.

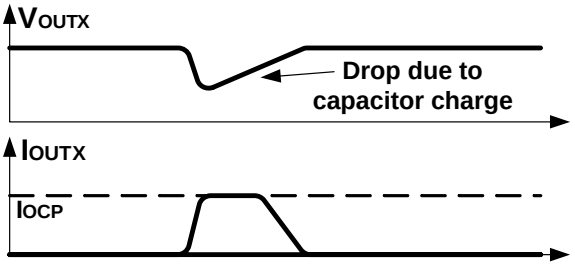

Figure 6. Heavy Capacitive Load

- In case of overload, the current is limited to the I_{OCP} value and the voltage value is reduced according to the load by the following relation:

$$V_{OUTX} = R_{LOAD2} \times I_{OCP} \quad \text{(eq. 1)}$$

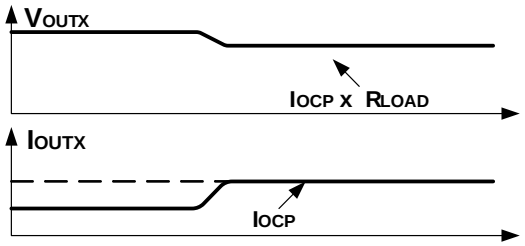

Figure 7. Overload

- In case of short circuit or huge load, the current is limited to the I_{OCP} value within T_{DET} time until the short condition is removed. If the output remains shorted or tied to a very low voltage, the junction temperature of the chip exceeds T_{SDOCP} value and the device enters in thermal shutdown (MOSFET is turned−off).

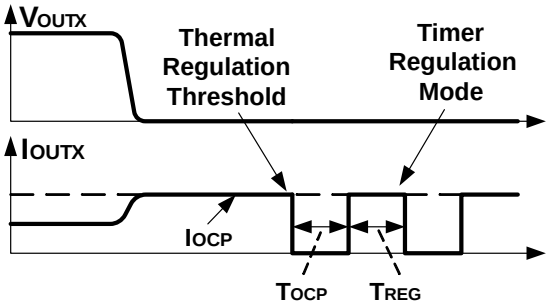

Figure 8. Short−Circuit

Then, the device enters in timer regulation mode, described in 2 phases:

- Off−phase: Power MOSFET is off during T_{OCP} to allow the die temperature to drop.
- On−phase: regulation current mode during $T_{REG.}$ The current is regulated to the I_{OCP} level.

The timer regulation mode allows the device to handle high thermal dissipation (in case of short circuit for example) within temperature operating condition.

NCP382 stays in on−phase/off−phase loop until the over current condition is removed or enable pin is toggled.

Remark: other regulation modes can be available for different applications. Please contact our On Semiconductor representative for availability.

$\overline{\text{FLAG}}$ Indicator

The $\overline{\text{FLAG}}$ pin is an open−drain MOSFET asserted low during overcurrent or overtemperature conditions. When an overcurrent fault is detected on the power path, $\overline{\text{FLAG}}$ pin is asserted low at the end of the associate deglitch time (TFOCP). Thanks to this feature, the $\overline{\text{FLAG}}$ pin is not tied low during the charge of a heavy capacitive load or a voltage transient on output. The $\overline{\text{FLAG}}$ pin remains low until the fault is removed. Then, the $\overline{\text{FLAG}}$ pin goes high at the end of T_{FGL}

Undervoltage Lock−out

Thanks to a built−in under voltage lockout (UVLO) circuitry, the output remains disconnected from input until V_{IN} voltage is above V_{UVLO}. This circuit has a V_{HYST} hysteresis witch provides noise immunity to transient condition.

Thermal Sense

Thermal shutdown turns off the power MOSFET if the die temperature exceeds T_{SD}. A built-in hysteresis prevents the part from turning on until the die temperature cools at TRSD.

Enable Input

Enable pin must be driven by a logic signal (CMOS or TTL compatible) or connected to the GND or VIN. A logic low on $\overline{ENX}$ or high on ENX turns−on the device. A logic high on $\overline{ENX}$ or low on ENX turns off device and reduces the current consumption down to I_{INOFF}.

Blocking Control

The blocking control circuitry switches the bulk of the power MOS. When the part is off, the body diode limits the leakage current I_{REV} from OUTX to IN. In this mode, anode of the body diode is connected to IN pin and cathode is connected to OUTX pin. In operating condition, anode of the body diode is connected to OUTX pin and cathode is connected to IN pin preventing the discharge of the power supply.

APPLICATION INFORMATION

Power Dissipation

The junction temperature of the device depends on different contributing factors such as board layout, ambient temperature, device environment, etc... Yet, the main contributor in term of junction temperature is the power dissipation of the power MOSFET. Assuming this, the power dissipation and the junction temperature in normal mode can be calculated with the following equations:

$$P_D = R_{DS(on)} \times \left(\left(I_{OUT1}\right)^2 + \left(I_{OUT2}\right)^2 \right) \quad \text{(eq. 2)}$$

P_D = Power dissipation (W)
$R_{DS(on)}$ = Power MOSFET on resistance (Ω)
I_{OUTx} = Output current in channel X (A)

$$T_J = P_D \times R_{\theta JA} + T_A \quad \text{(eq. 3)}$$

T_J = Junction temperature (°C)
$R_{\theta JA}$ = Package thermal resistance (°C/W)
T_A = Ambient temperature (°C)

Power dissipation in regulation mode can be calculated by taking into account the drop $V_{IN} - V_{OUTX}$ link to the load by the following relation:

$$P_D = \left(\left(V_{IN} - R_{LOAD1} \times I_{OCP}\right) + \left(V_{IN} - R_{LOAD2} \times I_{OCP}\right) \right) \times I_{OCP} \quad \text{(eq. 4)}$$

P_D = Power dissipation (W)
V_{IN} = Input Voltage (V)
R_{LOADX} = Load Resistance on channel X (Ω)
I_{OCP} = Output regulated current (A)

PCB Recommendations

The NCP382 integrates two PMOS FET rated up to 2 A, and the PCB design rules must be respected to properly evacuate the heat out of the silicon. The DFN8 PAD1 must be connected to ground plane to increase the heat transfer if necessary. Of course, in any case, this pad must not connect to any other potential. By increasing PCB area, the $R_{\theta JA}$ of the package can be decreased, allowing higher current.

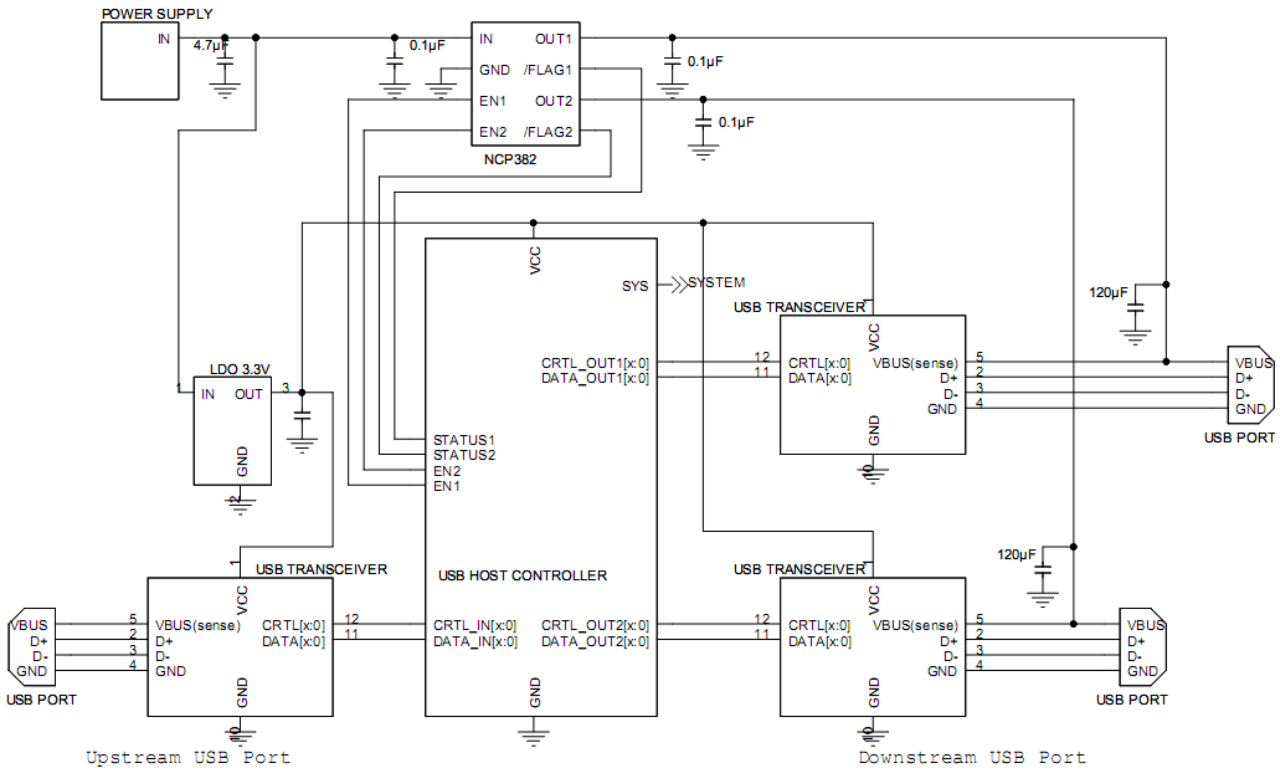

Figure 9. USB Host Typical Application

ORDERING INFORMATION

Device	Marking	Active Enable Level	Over Current Limit	Evaluation Board	UL 2367	IEC60950 Ed2 (CB Scheme)	IEC60950 Ed2 Ad1, Ad2	Package	Shipping†
NCP382LMN05-AATXG	382 L05	ENx Low	0.5 A	NCP382LMN05AGEVB	N	N	N	DFN8 (Pb−Free)	3000 / Tape / Reel
NCP382LMN10-AATXG	382 L10		1.0 A	NCP382LMN10AGEVB	N	N	N		
NCP382LMN15-AATXG	382 L15		1.5 A	NCP382LMN15AGEVB	N	N	N		
NCP382LMN20-AATXG	382 L20		2.0 A	NCP382LMN20AGEVB	N	N	N		
NCP382HMN05-AATXG	382 H05	ENx High	0.5 A	NCP382HMN05AGEVB	N	N	N		
NCP382HMN10-AATXG	382 H10		1.0 A	NCP382HMN10AGEVB	N	N	N		
NCP382HMN15-AATXG	382 H15		1.5 A	NCP382HMN15AGEVB	N	N	N		
NCP382HMN20-AATXG	382 H20		2.0 A	NCP382HMN20AGEVB	N	N	N		
NCP382LD05AA-R2G	382L05	ENx Low	0.5 A	NCP382LD05AAGEVB	Y	Y	Y	SOIC−8 (Pb−Free)	2500 / Tape / Reel
NCP382LD10AA-R2G	382L10		1.0 A	NCP382LD10AAGEVB	Y	Y	Y		
NCP382LD15AA-R2G	382L15		1.5 A	NCP382LD15AAGEVB	Y	Y	Y		
NCP382HD05A-AR2G	382H05	ENx High	0.5 A	NCP382HD05AAGEVB	Y	Y	Y		
NCP382HD10A-AR2G	382H10		1.0 A	NCP382HD10AAGEVB	Y	Y	Y		
NCP382HD15A-AR2G	382H15		1.5 A	NCP382HD15AAGEVB	Y	Y	Y		

†For information on tape and reel specifications, including part orientation and tape sizes, please refer to our Tape and Reel Packaging Specifications Brochure, BRD8011/D.

PACKAGE DIMENSIONS

DFN8, 3x3, 0.65P
CASE 506BW
ISSUE O

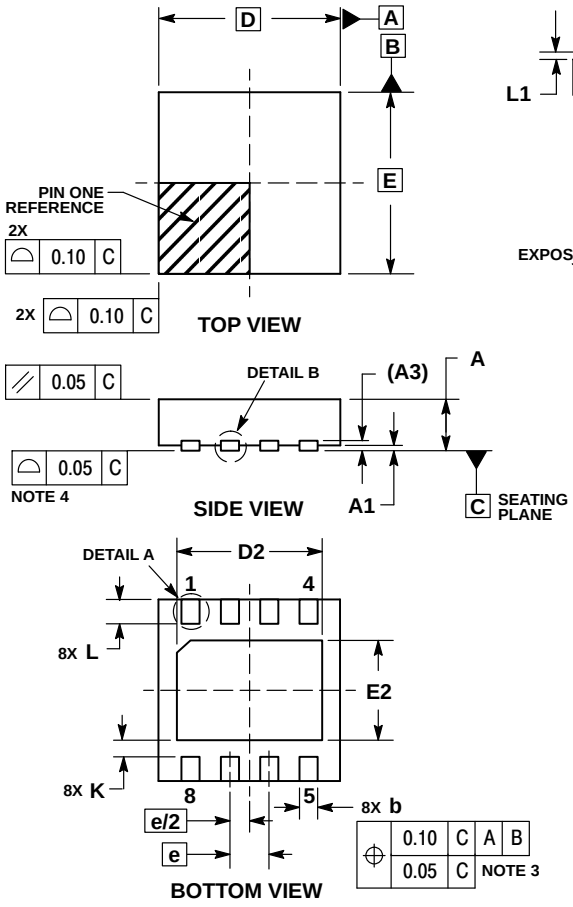

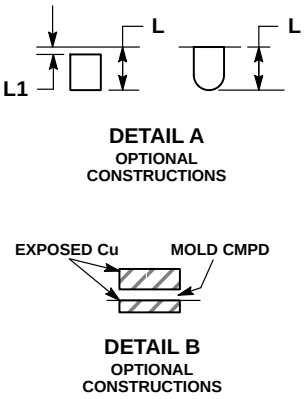

NOTES:
1. DIMENSIONING AND TOLERANCING PER ASME Y14.5M, 1994.
2. CONTROLLING DIMENSION: MILLIMETERS.
3. DIMENSION b APPLIES TO PLATED TERMINAL AND IS MEASURED BETWEEN 0.15 AND 0.30mm FROM THE TERMINAL TIP.
4. COPLANARITY APPLIES TO THE EXPOSED PAD AS WELL AS THE TERMINALS.

	MILLIMETERS	
DIM	MIN	MAX
A	0.80	1.00
A1	0.00	0.05
A3	0.20 REF	
b	0.25	0.35
D	3.00 BSC	
D2	2.30	2.50
E	3.00 BSC	
E2	1.55	1.75
e	0.65 BSC	
K	0.20	−−−
L	0.35	0.45
L1	0.00	0.15

RECOMMENDED SOLDERING FOOTPRINT*

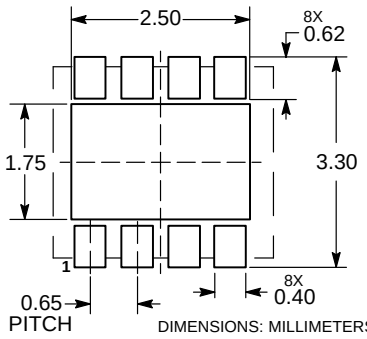

*For additional information on our Pb−Free strategy and soldering details, please download the ON Semiconductor Soldering and Mounting Techniques Reference Manual, SOLDERRM/D.

PACKAGE DIMENSIONS

SOIC−8 NB
CASE 751−07
ISSUE AK

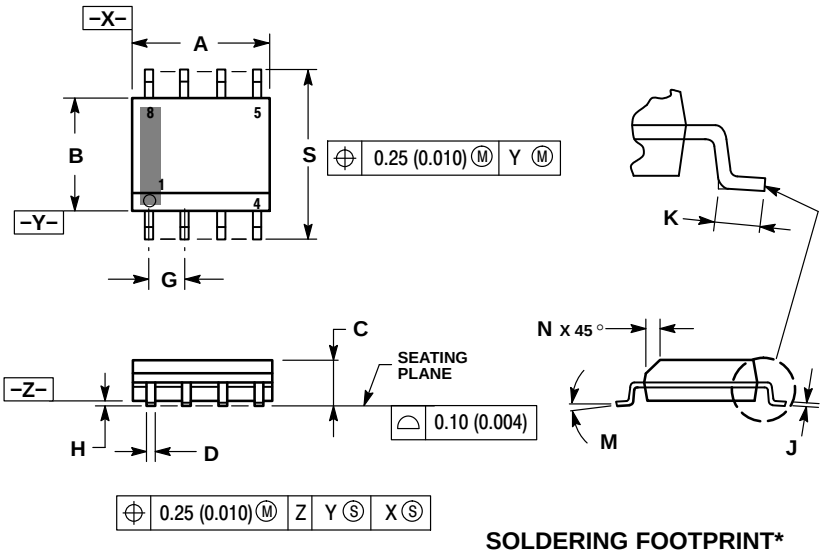

NOTES:
1. DIMENSIONING AND TOLERANCING PER ANSI Y14.5M, 1982.
2. CONTROLLING DIMENSION: MILLIMETER.
3. DIMENSION A AND B DO NOT INCLUDE MOLD PROTRUSION.
4. MAXIMUM MOLD PROTRUSION 0.15 (0.006) PER SIDE.
5. DIMENSION D DOES NOT INCLUDE DAMBAR PROTRUSION. ALLOWABLE DAMBAR PROTRUSION SHALL BE 0.127 (0.005) TOTAL IN EXCESS OF THE D DIMENSION AT MAXIMUM MATERIAL CONDITION.
6. 751−01 THRU 751−06 ARE OBSOLETE. NEW STANDARD IS 751−07.

	MILLIMETERS		INCHES	
DIM	MIN	MAX	MIN	MAX
A	4.80	5.00	0.189	0.197
B	3.80	4.00	0.150	0.157
C	1.35	1.75	0.053	0.069
D	0.33	0.51	0.013	0.020
G	1.27 BSC		0.050 BSC	
H	0.10	0.25	0.004	0.010
J	0.19	0.25	0.007	0.010
K	0.40	1.27	0.016	0.050
M	0 °	8 °	0 °	8 °
N	0.25	0.50	0.010	0.020
S	5.80	6.20	0.228	0.244

SOLDERING FOOTPRINT*

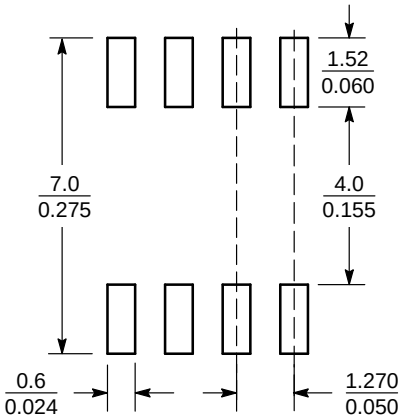

SCALE 6:1 (mm / inches)

*For additional information on our Pb−Free strategy and soldering details, please download the ON Semiconductor Soldering and Mounting Techniques Reference Manual, SOLDERRM/D.

ON Semiconductor and ON are trademarks of Semiconductor Components Industries, LLC dba ON Semiconductor or its subsidiaries in the United States and/or other countries. ON Semiconductor owns the rights to a number of patents, trademarks, copyrights, trade secrets, and other intellectual property. A listing of ON Semiconductor's product/patent coverage may be accessed at www.onsemi.com/site/pdf/Patent−Marking.pdf. ON Semiconductor reserves the right to make changes without further notice to any products herein. ON Semiconductor makes no warranty, representation or guarantee regarding the suitability of its products for any particular purpose, nor does ON Semiconductor assume any liability arising out of the application or use of any product or circuit, and specifically disclaims any and all liability, including without limitation special, consequential or incidental damages. Buyer is responsible for its products and applications using ON Semiconductor products, including compliance with all laws, regulations and safety requirements or standards, regardless of any support or applications information provided by ON Semiconductor. "Typical" parameters which may be provided in ON Semiconductor data sheets and/or specifications can and do vary in different applications and actual performance may vary over time. All operating parameters, including "Typicals" must be validated for each customer application by customer's technical experts. ON Semiconductor does not convey any license under its patent rights nor the rights of others. ON Semiconductor products are not designed, intended, or authorized for use as a critical component in life support systems or any FDA Class 3 medical devices or medical devices with a same or similar classification in a foreign jurisdiction or any devices intended for implantation in the human body. Should Buyer purchase or use ON Semiconductor products for any such unintended or unauthorized application, Buyer shall indemnify and hold ON Semiconductor and its officers, employees, subsidiaries, affiliates, and distributors harmless against all claims, costs, damages, and expenses, and reasonable attorney fees arising out of, directly or indirectly, any claim of personal injury or death associated with such unintended or unauthorized use, even if such claim alleges that ON Semiconductor was negligent regarding the design or manufacture of the part. ON Semiconductor is an Equal Opportunity/Affirmative Action Employer. This literature is subject to all applicable copyright laws and is not for resale in any manner.

PUBLICATION ORDERING INFORMATION

LITERATURE FULFILLMENT:
Literature Distribution Center for ON Semiconductor
19521 E. 32nd Pkwy, Aurora, Colorado 80011 USA
Phone: 303−675−2175 or 800−344−3860 Toll Free USA/Canada
Fax: 303−675−2176 or 800−344−3867 Toll Free USA/Canada
Email: orderlit@onsemi.com

N. American Technical Support: 800−282−9855 Toll Free USA/Canada
Europe, Middle East and Africa Technical Support:
Phone: 421 33 790 2910
Japan Customer Focus Center
Phone: 81−3−5817−1050

ON Semiconductor Website: **www.onsemi.com**

Order Literature: http://www.onsemi.com/orderlit

For additional information, please contact your local Sales Representative