NCP4300A

Dual Operational Amplifier and Voltage Reference

The NCP4300A is a monolithic integrated circuit specifically designed to control the output current and voltage levels of switch mode battery chargers and power supplies. This device contains a precision 2.6 V shunt reference and two operational amplifiers. Op−Amp 1 is designed to perform voltage control and has its non−inverting input internally connected to the reference. Op−Amp 2 is designed for current control and has both inputs uncommitted. The NCP4300A offers the power converter designer a control solution that features increased precision with a corresponding reduction in system complexity and cost. This device is available in an 8−lead surface mount package.

Features

- This is a Pb−Free Device

Operational Amplifier

- Low Input Offset Voltage: 0.5 mV
- Input Common Mode Voltage Range Includes Ground
- Low Supply Current: 210 μA/Op−Amp (@V_{CC} = 5.0 V)
- Medium Unity Gain Bandwidth: 0.7 MHz
- Large Output Voltage Swing: 0 V to V_{CC} − 1.5 V
- Wide Power Supply Voltage Range: 3.0 V to 35 V

Voltage Reference

- Fixed Output Voltage Reference: 2.60 V
- High Precision Over Temperature: 1.0%
- Wide Sink Current Range: 80 μA to 80 mA

Typical Applications

- Battery Charger
- Switch Mode Power Supply

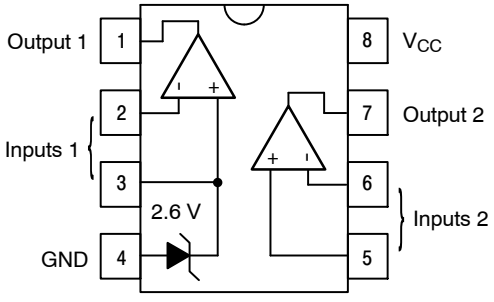

Figure 1. Functional Block Diagram

ON Semiconductor®

http://onsemi.com

MARKING DIAGRAM



SOIC−8
D SUFFIX
CASE 751

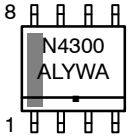

A = Assembly Location
L = Wafer Lot
Y = Year
W = Work Week
A = Option Code
▪ = Pb−Free Package

PIN CONNECTIONS

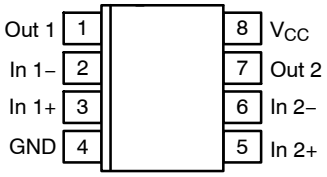

(Top View)

ORDERING INFORMATION

Device	Package	Shipping†
NCP4300ADG	SOIC−8 (Pb−Free)	98 Units / Rail
NCP4300ADR2G	SOIC−8 (Pb−Free)	2500/Tape & Reel

†For information on tape and reel specifications, including part orientation and tape sizes, please refer to our Tape and Reel Packaging Specification Brochure, BRD8011/D.

© Semiconductor Components Industries, LLC, 2009

ABSOLUTE MAXIMUM RATINGS

Rating	Symbol	Value	Unit
Supply Voltage (V_{CC} to GND)	V_{CC}	36	V
ESD Protection Voltage at any Pin (Human Body Model)	V_{ESD}	2.0 K (min)	V
Op−Amp 1 and 2 Input Voltage Range (Pins 2, 5, 6)	V_{IR}	−0.6 to V_{CC} +0.6	V
Op−Amp 2 Input Differential Voltage Range (Pins 5, 6)	V_{IDR}	V_{CC} to GND	V
Voltage Reference Cathode Current (Pin 3)	I_K	100	mA
Maximum Junction Temperature	T_J	150	°C
Operating Ambient Temperature Range	T_A	0 to 105	°C
Storage Temperature Range	T_{stg}	−55 to 150	°C

Stresses exceeding Maximum Ratings may damage the device. Maximum Ratings are stress ratings only. Functional operation above the Recommended Operating Conditions is not implied. Extended exposure to stresses above the Recommended Operating Conditions may affect device reliability.

THERMAL CHARACTERISTICS

Rating	Symbol	Value	Unit
Thermal Resistance, Junction−to−Ambient	$R_{\theta JA}$	155	°C/W
Thermal Resistance, Junction−to−Case	$R_{\theta JC}$	45	°C/W

TYPICAL ELECTRICAL CHARACTERISTICS

Characteristic	Symbol	Min	Typ	Max	Unit
Total Supply Current, excluding Current in the Voltage Reference V_{CC} = 5.0 V, no load; 0°C ≤ T_A ≤ 105°C	I_{CC}	−	0.42	0.8	mA

Op−Amp 1 (Op−amp with non−inverting input connected to the internal Vref)
(V_{CC} = 5.0 V, V_{out} = 1.4 V, T_A = 25°C, unless otherwise noted)

Input Offset Voltage T_A = 25°C T_A = 0°C to 105°C	V_{IO}	 − −	 0.5 −	 2.0 3.0	mV
Input Offset Voltage Temperature Coefficient T_A = 0°C to 105°C	$\Delta V_{IO}/\Delta T$	−	7.0	−	μV/°C
Input Bias Current (Inverting input only) T_A = 25°C T_A = 0°C to 105°C	I_{IB}	 − −	 −50 −	 −150 −150	nA
Large Signal Voltage Gain (V_{CC} = 15 V, R_L = 2.0 kΩ, V_{out} = 1.4 V to 11.4 V) T_A = 25°C T_A = 0°C to 105°C	A_{VOL}	 50 25	 100 −	 − −	V/mV
Power Supply Rejection (V_{CC} = 5.0 V to 30 V)	PSRR	40	90	−	dB
Output Source Current (V_{CC} = 15 V, V_{out} = 2.0 V, V_{ID} = +1.0 V)	I_{O+}	10	16	−	mA
Output Sink Current (V_{CC} = 15 V, V_{out} = 2.0 V, V_{ID} = −1.0 V)	$I_{O−}$	10	25	−	mA
Output Voltage Swing, High (V_{CC} = 30 V, R_L = 10 kΩ, V_{ID} = +1.0 V) T_A = 25°C T_A = 0°C to 105°C	V_{OH}	 27 27	 28 −	 − −	V
Output Voltage Swing, Low (R_L = 10 kΩ, V_{ID} = −1.0 V) T_A = 25°C T_A = 0°C to 105°C	V_{OL}	 − −	 17 −	 100 100	mV
Slew Rate (V_{in} = 0.5 to 2.0 V, V_{CC} = 15 V, R_L = 2.0 kΩ, A_v = 1.0, C_L = 100 pF)	SR	0.3	0.5	−	V/μs
Unity Gain Bandwidth (V_{CC} = 30 V, R_L = 2.0 kΩ, C_L = 100 pF, V_{in} = 0.5 Vpp @ f = 70 kHz)	BW	0.3	0.7	−	MHz
Total Harmonic Distortion (f = 1.0 kHz, A_V = 10, R_L = 2.0 kΩ, V_{CC} = 30 V, V_{out} = 2.0 V_{PP})	THD	−	0.02	−	%

TYPICAL ELECTRICAL CHARACTERISTICS (continued)

Characteristic	Symbol	Min	Typ	Max	Unit
Op−Amp 2 (Independent op−amp) (V_{CC} = 5.0 V, V_{out} = 1.4 V, T_A = 25°C, unless otherwise noted)					
Input Offset Voltage T_A = 25°C T_A = 0°C to 105°C	V_{IO}	 – –	 0.5 –	 2.0 3.0	mV
Input Offset Voltage Temperature Coefficient T_A = 0°C to 105°C	$\Delta V_{IO}/\Delta T$	–	7.0	–	μV/°C
Input Offset Current T_A = 25°C T_A = 0°C to 105°C	I_{IO}	 – –	 2.0 –	 30 30	nA
Input Bias Current T_A = 25°C T_A = 0°C to 105°C	I_{IB}	 – –	 −50 –	 −150 −150	nA
Input Common Mode Voltage Range (V_{CC} = 0 V to 35 V)	V_{ICR}	–	0 to V_{CC} −1.5	–	V
Large Signal Voltage Gain (V_{CC} = 15 V, R_L = 2.0 kΩ, V_{out} = 1.4 V to 11.4 V) T_A = 25°C T_A = 0°C to 105°C	A_{VOL}	 50 25	 100 –	 – –	V/mV
Power Supply Rejection (V_{CC} = 5.0 V to 30 V)	PSRR	40	90	–	dB
Common Mode Rejection (V_{CM} = 0 V to 3.5 V) T_A = 25°C T_A = 0°C to 105°C	CMRR	 40 30	 60 –	 – –	dB
Output Source Current (V_{CC} = 15 V, V_{out} = 2.0 V, V_{ID} = +1.0 V)	I_{O+}	10	16	–	mA
Output Sink Current (V_{CC} = 15 V, V_{out} = 2.0 V, V_{ID} = −1.0 V)	I_{O-}	10	25	–	mA
Output Voltage Swing, High (V_{CC} = 30 V, R_L = 10 kΩ, V_{ID} = +1.0 V) T_A = 25°C T_A = 0°C to 105°C	V_{OH}	 27 27	 28 –	 – –	V
Output Voltage Swing, Low (R_L = 10 kΩ, V_{ID} = −1.0 V) T_A = 25°C T_A = 0°C to 105°C	V_{OL}	 – –	 17 –	 100 100	mV
Slew Rate (V_{in} = 0.5 to 3.0 V, V_{CC} = 15 V, R_L = 2.0 kΩ, A_v = 1.0, C_L = 100 pF)	SR	0.3	0.5	–	V/μs
Unity Gain Bandwidth (V_{CC} = 30 V, R_L = 2.0 kΩ, C_L = 100 pF, V_{in} = 0.5 Vpp @ f = 70 kHz)	BW	0.3	0.7	–	MHz
Total Harmonic Distortion (f = 1.0 KHz, A_V = 10, R_L = 2.0 kΩ, V_{CC} = 30 V, V_{out} = 2.0 V_{PP})	THD	–	0.02	–	%
Voltage Reference					
Reference Voltage (I_K = 10 mA) T_A = 25°C T_A = 0°C to 105°C	V_{ref}	 – 2.574	 2.60 2.60	 – 2.626	V
Reference Input Voltage Deviation Over Full Temperature Range (I_K = 10 mA, T_A = 0°C to 105°C)	ΔV_{ref}	–	5.0	22	mV
Minimum Cathode Current for Regulation	$I_{K(min)}$	–	55	80	μA
Dynamic Impedance T_A = 25°C, I_K = 1.0 to 80 mA, f < 1.0 KHz T_A = 0°C to 125°C, I_K = 1.0 mA to 60 mA, f < 1.0 KHz	$\lvert Z_{KA} \rvert$	 – –	 0.3 –	 0.5 0.6	Ω

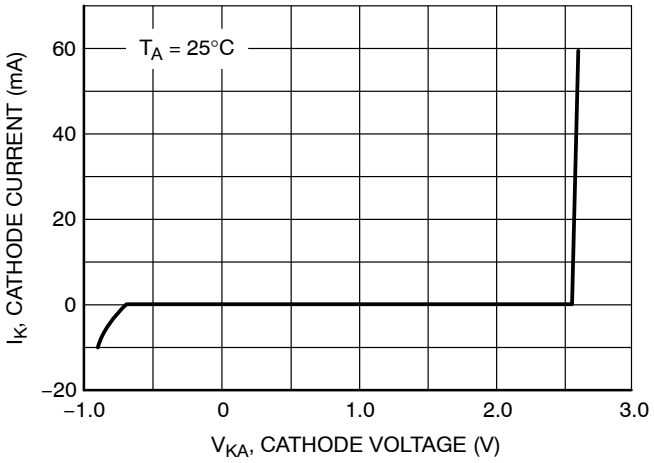

Figure 2. Reference Cathode Current vs. Cathode Voltage

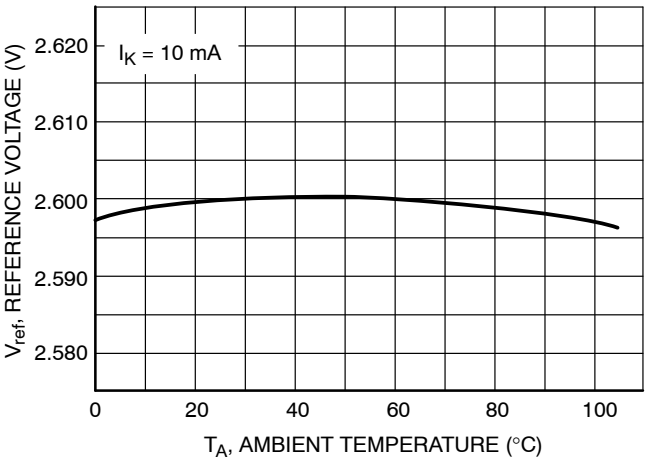

Figure 3. Reference Voltage vs. Ambient Temperature

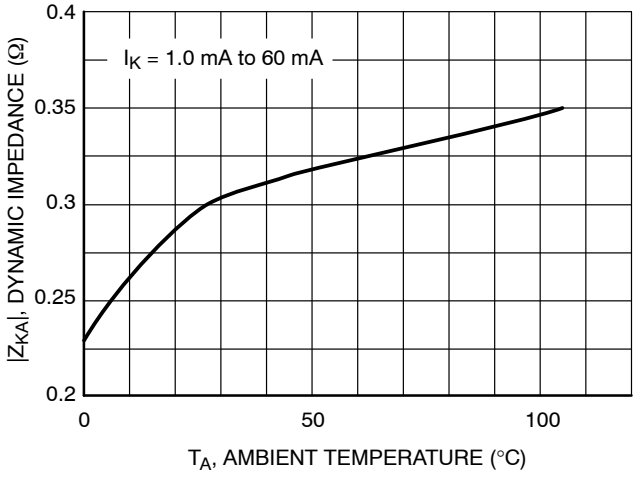

Figure 4. Reference Dynamic Impedance vs. Ambient Temperature

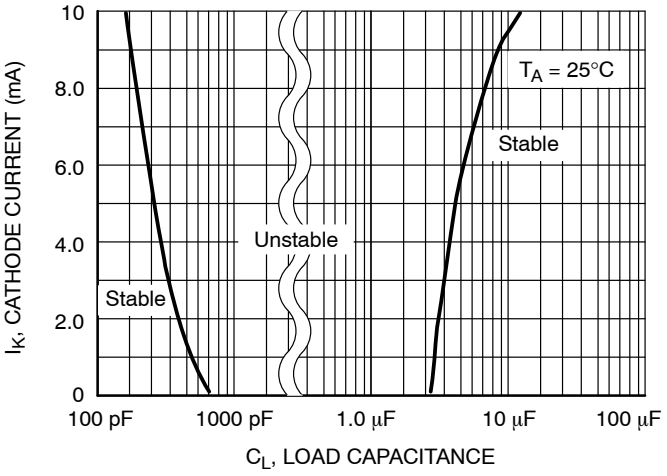

Figure 5. Reference Stability vs. Load Capacitance

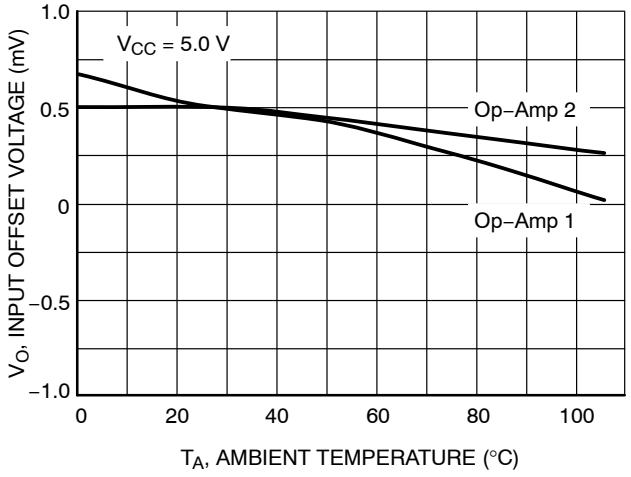

Figure 6. Input Offset Voltage vs. Ambient Temperature

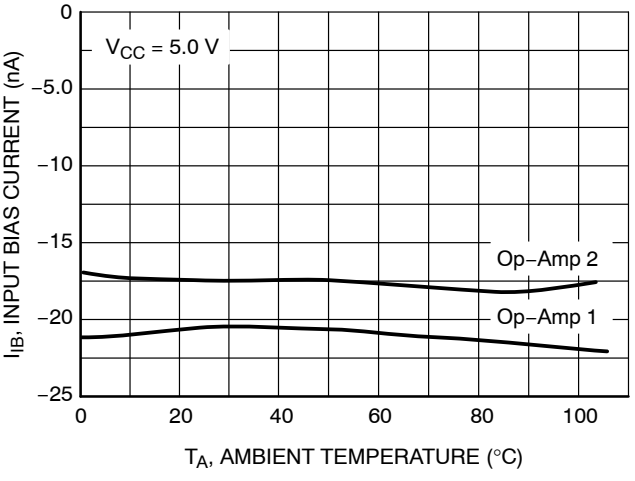

Figure 7. Input Bias Current vs. Ambient Temperature

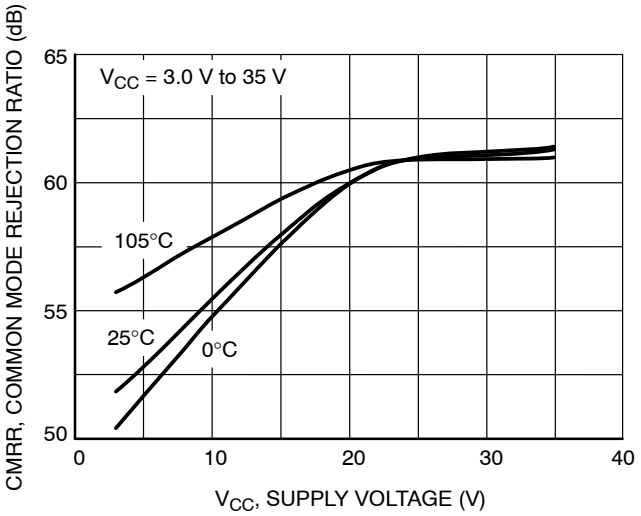

Figure 8. Common Mode Rejection Ratio vs. Supply Voltage

DETAILED OPERATING DESCRIPTION

INTRODUCTION

Power supplies and battery chargers require precise control of output voltage and current in order to prevent catastrophic damage to the system connected. Many present day power sources contain a wide assortment of building blocks and glue devices to perform the required sensing for proper regulation. Typical feedback loop circuits may consist of a voltage and current amplifier, summing circuitry and a reference. The NCP4300A contains all of these basic functions in a manner that is easily adaptable to many of the various power source−load configurations.

OPERATING DESCRIPTION

The NCP4300A is an analog regulation control circuit that is designed to simultaneously close the voltage and current feedback loops in power supply and battery charger applications. This device can control the feedback loop in either constant−voltage (CV) or constant−current (CC) mode with smooth crossover. A concise description of the integrated circuit blocks is given in below. The functional block diagram of the IC is shown in Figure 1.

Internal Reference

An internal precision band gap reference is used to set the 2.6 V voltage threshold and current threshold setting. The reference is initially trimmed to a ±0.5% tolerance at T_A = 25°C and is guaranteed to be within ±1.0% over an ambient temperature range of 0°C to 105°C.

Voltage Sensing Operational Amplifier (Op−Amp 1)

The internal Op−Amp 1 is designed to perform the voltage control function. The non−inverting input of the op−amp is connected to the precision voltage reference internally. The inverting input of the op−amp monitors the voltage information derived from the system output. As the control threshold is internally connected to the voltage reference, the voltage regulation threshold is fixed at 2.6 V. For any output voltage from 2.6 V up to the maximum limit can be configurated with an external resistor divider. The output terminal of Op−Amp 1 (pin 1) provides the error signal for output voltage control. The output pin also provides a means for external compensation.

Independent Operational Amplifier (Op−Amp 2)

The internal Op−Amp 2 is configurated as a general purpose op−amp with all terminals available for the user. With the low offset voltage provided, 0.5 mV, this op−amp can be used for current sensing in a constant current regulator.

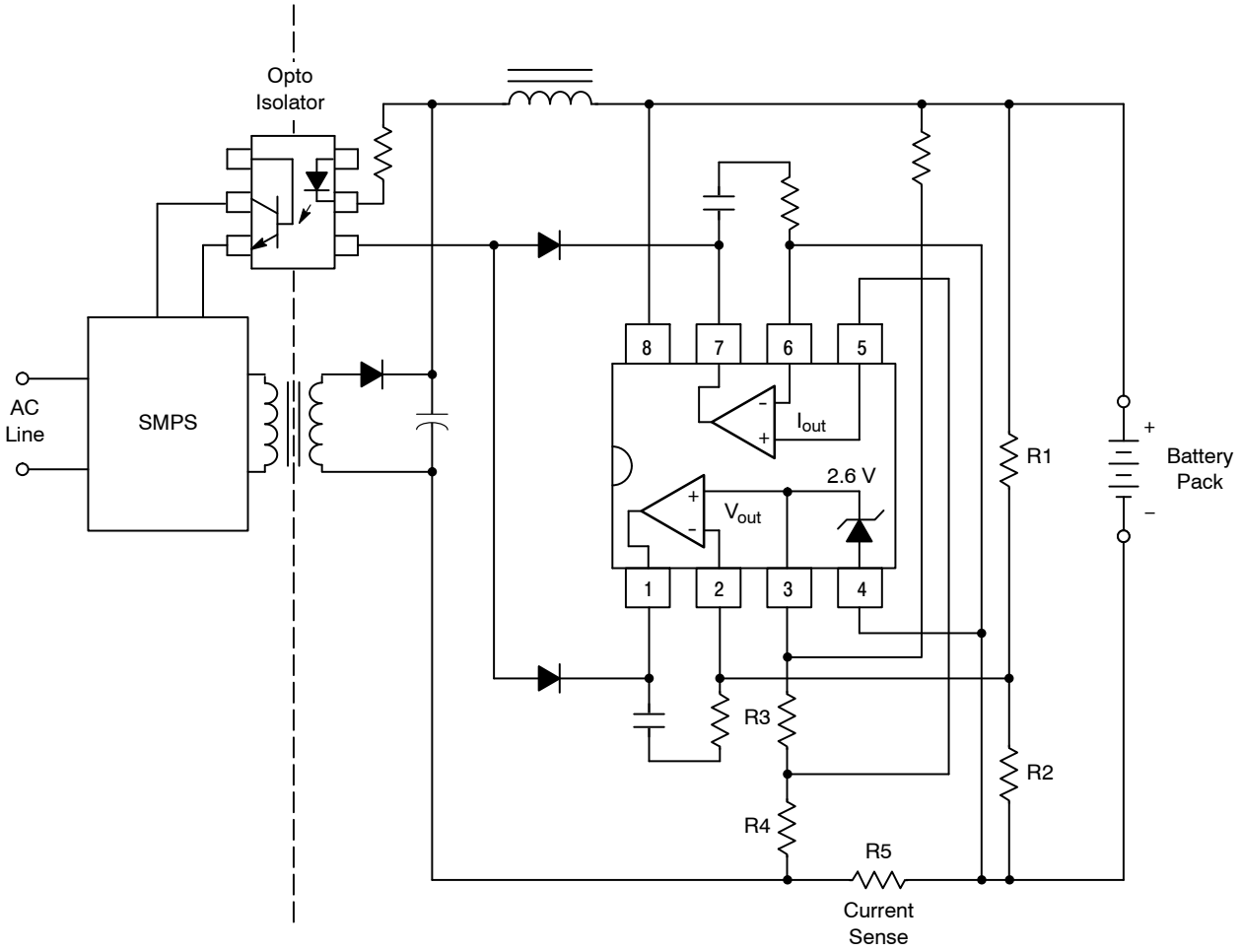

The above circuit demonstrates the use of the NCP4300A in a constant−current constant−voltage switch mode battery charger application. The charging current level is set by resistors R3, R4, and R5. The reference voltage is divided down by resistors R3 and R4 to create an offset voltage at pin 6. This results in a high state at the op amp output, pin 7. As the battery pack charge current increases, a proportional increasing voltage is developed across R5 that will eventually cancel out the pin 6 offset voltage. This will cause the op amp output to sink current from the opto isolator diode, and control the SMPS block in a constant−current mode. Resistors R1 and R2 divide the battery pack voltage down to the 2.6 V reference level. As the battery pack voltage exceeds the desired programmed level, the voltage at pin 2 will become slightly greater than pin 3. This will cause the op amp output to sink current from the opto isolator diode, and control the SMPS block in a constant−voltage mode. The formulas for programming the output current and voltage are given below.

$$I_{out} = \frac{V_{ref}}{\left(\frac{R3}{R4} + 1\right) R5} \qquad V_{out} = \left(\frac{R1}{R2} + 1\right) V_{ref}$$

With : R3 = 30 k
R4 = 1.2 k
R5 = 0.1
I_{out} = 1.0 A

With : R1 = 4.7 k
R2 = 3.6 k
V_{out} = 6.0 V

Figure 9. Constant−Current Constant−Voltage Switch Mode Battery Charger

MECHANICAL CASE OUTLINE
PACKAGE DIMENSIONS



SCALE 1:1

SOIC−8 NB
CASE 751−07
ISSUE AK

DATE 16 FEB 2011

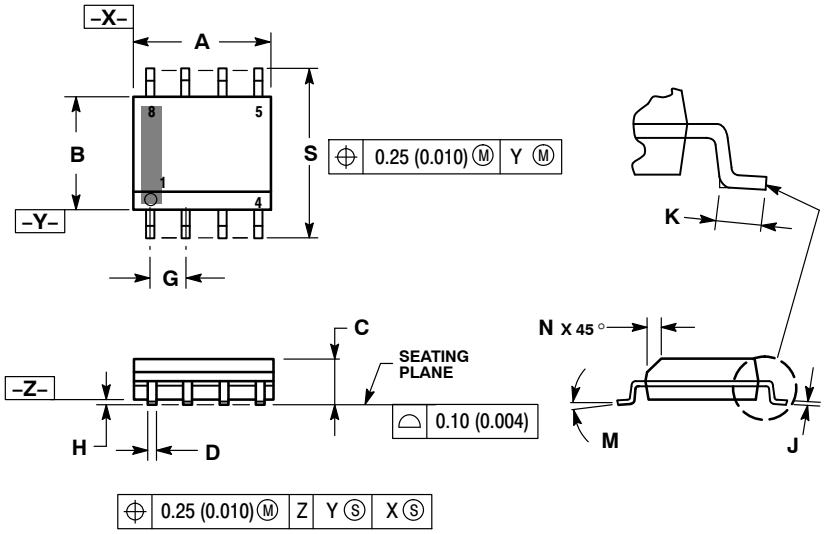

NOTES:
1. DIMENSIONING AND TOLERANCING PER ANSI Y14.5M, 1982.
2. CONTROLLING DIMENSION: MILLIMETER.
3. DIMENSION A AND B DO NOT INCLUDE MOLD PROTRUSION.
4. MAXIMUM MOLD PROTRUSION 0.15 (0.006) PER SIDE.
5. DIMENSION D DOES NOT INCLUDE DAMBAR PROTRUSION. ALLOWABLE DAMBAR PROTRUSION SHALL BE 0.127 (0.005) TOTAL IN EXCESS OF THE D DIMENSION AT MAXIMUM MATERIAL CONDITION.
6. 751−01 THRU 751−06 ARE OBSOLETE. NEW STANDARD IS 751−07.

	MILLIMETERS		INCHES	
DIM	MIN	MAX	MIN	MAX
A	4.80	5.00	0.189	0.197
B	3.80	4.00	0.150	0.157
C	1.35	1.75	0.053	0.069
D	0.33	0.51	0.013	0.020
G	1.27 BSC		0.050 BSC	
H	0.10	0.25	0.004	0.010
J	0.19	0.25	0.007	0.010
K	0.40	1.27	0.016	0.050
M	0 °	8 °	0 °	8 °
N	0.25	0.50	0.010	0.020
S	5.80	6.20	0.228	0.244

SOLDERING FOOTPRINT*

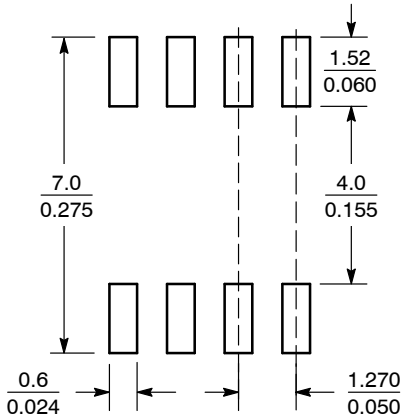

SCALE 6:1 (mm / inches)

*For additional information on our Pb−Free strategy and soldering details, please download the ON Semiconductor Soldering and Mounting Techniques Reference Manual, SOLDERRM/D.

GENERIC MARKING DIAGRAM*

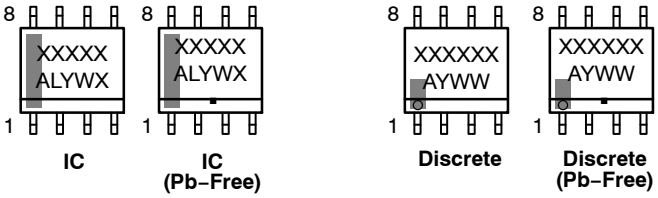

IC | IC (Pb−Free) | Discrete | Discrete (Pb−Free)

XXXXX = Specific Device Code
A = Assembly Location
L = Wafer Lot
Y = Year
W = Work Week
▪ = Pb−Free Package

XXXXXX = Specific Device Code
A = Assembly Location
Y = Year
WW = Work Week
▪ = Pb−Free Package

*This information is generic. Please refer to device data sheet for actual part marking. Pb−Free indicator, "G" or microdot "▪", may or may not be present. Some products may not follow the Generic Marking.

STYLES ON PAGE 2

DOCUMENT NUMBER:	**98ASB42564B**	Electronic versions are uncontrolled except when accessed directly from the Document Repository. Printed versions are uncontrolled except when stamped "CONTROLLED COPY" in red.
DESCRIPTION:	**SOIC−8 NB**	**PAGE 1 OF 2**

onsemi and onsemi are trademarks of Semiconductor Components Industries, LLC dba **onsemi** or its subsidiaries in the United States and/or other countries. **onsemi** reserves the right to make changes without further notice to any products herein. **onsemi** makes no warranty, representation or guarantee regarding the suitability of its products for any particular purpose, nor does **onsemi** assume any liability arising out of the application or use of any product or circuit, and specifically disclaims any and all liability, including without limitation special, consequential or incidental damages. **onsemi** does not convey any license under its patent rights nor the rights of others.

© Semiconductor Components Industries, LLC, 2019

SOIC−8 NB
CASE 751−07
ISSUE AK

DATE 16 FEB 2011

STYLE 1:
PIN 1. EMITTER
2. COLLECTOR
3. COLLECTOR
4. EMITTER
5. EMITTER
6. BASE
7. BASE
8. EMITTER

STYLE 2:
PIN 1. COLLECTOR, DIE, #1
2. COLLECTOR, #1
3. COLLECTOR, #2
4. COLLECTOR, #2
5. BASE, #2
6. EMITTER, #2
7. BASE, #1
8. EMITTER, #1

STYLE 3:
PIN 1. DRAIN, DIE #1
2. DRAIN, #1
3. DRAIN, #2
4. DRAIN, #2
5. GATE, #2
6. SOURCE, #2
7. GATE, #1
8. SOURCE, #1

STYLE 4:
PIN 1. ANODE
2. ANODE
3. ANODE
4. ANODE
5. ANODE
6. ANODE
7. ANODE
8. COMMON CATHODE

STYLE 5:
PIN 1. DRAIN
2. DRAIN
3. DRAIN
4. DRAIN
5. GATE
6. GATE
7. SOURCE
8. SOURCE

STYLE 6:
PIN 1. SOURCE
2. DRAIN
3. DRAIN
4. SOURCE
5. SOURCE
6. GATE
7. GATE
8. SOURCE

STYLE 7:
PIN 1. INPUT
2. EXTERNAL BYPASS
3. THIRD STAGE SOURCE
4. GROUND
5. DRAIN
6. GATE 3
7. SECOND STAGE Vd
8. FIRST STAGE Vd

STYLE 8:
PIN 1. COLLECTOR, DIE #1
2. BASE, #1
3. BASE, #2
4. COLLECTOR, #2
5. COLLECTOR, #2
6. EMITTER, #2
7. EMITTER, #1
8. COLLECTOR, #1

STYLE 9:
PIN 1. EMITTER, COMMON
2. COLLECTOR, DIE #1
3. COLLECTOR, DIE #2
4. EMITTER, COMMON
5. EMITTER, COMMON
6. BASE, DIE #2
7. BASE, DIE #1
8. EMITTER, COMMON

STYLE 10:
PIN 1. GROUND
2. BIAS 1
3. OUTPUT
4. GROUND
5. GROUND
6. BIAS 2
7. INPUT
8. GROUND

STYLE 11:
PIN 1. SOURCE 1
2. GATE 1
3. SOURCE 2
4. GATE 2
5. DRAIN 2
6. DRAIN 2
7. DRAIN 1
8. DRAIN 1

STYLE 12:
PIN 1. SOURCE
2. SOURCE
3. SOURCE
4. GATE
5. DRAIN
6. DRAIN
7. DRAIN
8. DRAIN

STYLE 13:
PIN 1. N.C.
2. SOURCE
3. SOURCE
4. GATE
5. DRAIN
6. DRAIN
7. DRAIN
8. DRAIN

STYLE 14:
PIN 1. N−SOURCE
2. N−GATE
3. P−SOURCE
4. P−GATE
5. P−DRAIN
6. P−DRAIN
7. N−DRAIN
8. N−DRAIN

STYLE 15:
PIN 1. ANODE 1
2. ANODE 1
3. ANODE 1
4. ANODE 1
5. CATHODE, COMMON
6. CATHODE, COMMON
7. CATHODE, COMMON
8. CATHODE, COMMON

STYLE 16:
PIN 1. EMITTER, DIE #1
2. BASE, DIE #1
3. EMITTER, DIE #2
4. BASE, DIE #2
5. COLLECTOR, DIE #2
6. COLLECTOR, DIE #2
7. COLLECTOR, DIE #1
8. COLLECTOR, DIE #1

STYLE 17:
PIN 1. VCC
2. V2OUT
3. V1OUT
4. TXE
5. RXE
6. VEE
7. GND
8. ACC

STYLE 18:
PIN 1. ANODE
2. ANODE
3. SOURCE
4. GATE
5. DRAIN
6. DRAIN
7. CATHODE
8. CATHODE

STYLE 19:
PIN 1. SOURCE 1
2. GATE 1
3. SOURCE 2
4. GATE 2
5. DRAIN 2
6. MIRROR 2
7. DRAIN 1
8. MIRROR 1

STYLE 20:
PIN 1. SOURCE (N)
2. GATE (N)
3. SOURCE (P)
4. GATE (P)
5. DRAIN
6. DRAIN
7. DRAIN
8. DRAIN

STYLE 21:
PIN 1. CATHODE 1
2. CATHODE 2
3. CATHODE 3
4. CATHODE 4
5. CATHODE 5
6. COMMON ANODE
7. COMMON ANODE
8. CATHODE 6

STYLE 22:
PIN 1. I/O LINE 1
2. COMMON CATHODE/VCC
3. COMMON CATHODE/VCC
4. I/O LINE 3
5. COMMON ANODE/GND
6. I/O LINE 4
7. I/O LINE 5
8. COMMON ANODE/GND

STYLE 23:
PIN 1. LINE 1 IN
2. COMMON ANODE/GND
3. COMMON ANODE/GND
4. LINE 2 IN
5. LINE 2 OUT
6. COMMON ANODE/GND
7. COMMON ANODE/GND
8. LINE 1 OUT

STYLE 24:
PIN 1. BASE
2. EMITTER
3. COLLECTOR/ANODE
4. COLLECTOR/ANODE
5. CATHODE
6. CATHODE
7. COLLECTOR/ANODE
8. COLLECTOR/ANODE

STYLE 25:
PIN 1. VIN
2. N/C
3. REXT
4. GND
5. IOUT
6. IOUT
7. IOUT
8. IOUT

STYLE 26:
PIN 1. GND
2. dv/dt
3. ENABLE
4. ILIMIT
5. SOURCE
6. SOURCE
7. SOURCE
8. VCC

STYLE 27:
PIN 1. ILIMIT
2. OVLO
3. UVLO
4. INPUT+
5. SOURCE
6. SOURCE
7. SOURCE
8. DRAIN

STYLE 28:
PIN 1. SW_TO_GND
2. DASIC_OFF
3. DASIC_SW_DET
4. GND
5. V_MON
6. VBULK
7. VBULK
8. VIN

STYLE 29:
PIN 1. BASE, DIE #1
2. EMITTER, #1
3. BASE, #2
4. EMITTER, #2
5. COLLECTOR, #2
6. COLLECTOR, #2
7. COLLECTOR, #1
8. COLLECTOR, #1

STYLE 30:
PIN 1. DRAIN 1
2. DRAIN 1
3. GATE 2
4. SOURCE 2
5. SOURCE 1/DRAIN 2
6. SOURCE 1/DRAIN 2
7. SOURCE 1/DRAIN 2
8. GATE 1

DOCUMENT NUMBER:	**98ASB42564B**	Electronic versions are uncontrolled except when accessed directly from the Document Repository. Printed versions are uncontrolled except when stamped "CONTROLLED COPY" in red.	
DESCRIPTION:	**SOIC−8 NB**		**PAGE 2 OF 2**

onsemi and ONSEMI. are trademarks of Semiconductor Components Industries, LLC dba **onsemi** or its subsidiaries in the United States and/or other countries. **onsemi** reserves the right to make changes without further notice to any products herein. **onsemi** makes no warranty, representation or guarantee regarding the suitability of its products for any particular purpose, nor does **onsemi** assume any liability arising out of the application or use of any product or circuit, and specifically disclaims any and all liability, including without limitation special, consequential or incidental damages. **onsemi** does not convey any license under its patent rights nor the rights of others.

© Semiconductor Components Industries, LLC, 2019

onsemi, , and other names, marks, and brands are registered and/or common law trademarks of Semiconductor Components Industries, LLC dba "**onsemi**" or its affiliates and/or subsidiaries in the United States and/or other countries. **onsemi** owns the rights to a number of patents, trademarks, copyrights, trade secrets, and other intellectual property. A listing of **onsemi**'s product/patent coverage may be accessed at www.onsemi.com/site/pdf/Patent−Marking.pdf. **onsemi** reserves the right to make changes at any time to any products or information herein, without notice. The information herein is provided "as−is" and **onsemi** makes no warranty, representation or guarantee regarding the accuracy of the information, product features, availability, functionality, or suitability of its products for any particular purpose, nor does **onsemi** assume any liability arising out of the application or use of any product or circuit, and specifically disclaims any and all liability, including without limitation special, consequential or incidental damages. Buyer is responsible for its products and applications using **onsemi** products, including compliance with all laws, regulations and safety requirements or standards, regardless of any support or applications information provided by **onsemi**. "Typical" parameters which may be provided in **onsemi** data sheets and/or specifications can and do vary in different applications and actual performance may vary over time. All operating parameters, including "Typicals" must be validated for each customer application by customer's technical experts. **onsemi** does not convey any license under any of its intellectual property rights nor the rights of others. **onsemi** products are not designed, intended, or authorized for use as a critical component in life support systems or any FDA Class 3 medical devices or medical devices with a same or similar classification in a foreign jurisdiction or any devices intended for implantation in the human body. Should Buyer purchase or use **onsemi** products for any such unintended or unauthorized application, Buyer shall indemnify and hold **onsemi** and its officers, employees, subsidiaries, affiliates, and distributors harmless against all claims, costs, damages, and expenses, and reasonable attorney fees arising out of, directly or indirectly, any claim of personal injury or death associated with such unintended or unauthorized use, even if such claim alleges that **onsemi** was negligent regarding the design or manufacture of the part. **onsemi** is an Equal Opportunity/Affirmative Action Employer. This literature is subject to all applicable copyright laws and is not for resale in any manner.

ADDITIONAL INFORMATION

TECHNICAL PUBLICATIONS:
Technical Library: www.onsemi.com/design/resources/technical−documentation
onsemi Website: www.onsemi.com

ONLINE SUPPORT: www.onsemi.com/support
For additional information, please contact your local Sales Representative at www.onsemi.com/support/sales