ecoSWITCH™
Advanced Load Management
Controlled Load Switch with Low R_{ON}

NCP45520, NCP45521

The NCP4552x series of load switches provide a component and area-reducing solution for efficient power domain switching with inrush current limit via soft start. In addition to integrated control functionality with ultra low on−resistance, these devices offer system safeguards and monitoring via fault protection and power good signaling. This cost effective solution is ideal for power management and hot-swap applications requiring low power consumption in a small footprint.

Features

- Advanced Controller with Charge Pump
- Integrated N-Channel MOSFET with Low R_{ON}
- Input Voltage Range 0.5 V to 13.5 V
- Soft-Start via Controlled Slew Rate
- Adjustable Slew Rate Control (NCP45521)
- Power Good Signal (NCP45520)
- Thermal Shutdown
- Undervoltage Lockout
- Short-Circuit Protection
- Extremely Low Standby Current
- Load Bleed (Quick Discharge)
- This is a Pb−Free Device

Typical Applications

- Portable Electronics and Systems
- Notebook and Tablet Computers
- Telecom, Networking, Medical, and Industrial Equipment
- Set−Top Boxes, Servers, and Gateways
- Hot Swap Devices and Peripheral Ports

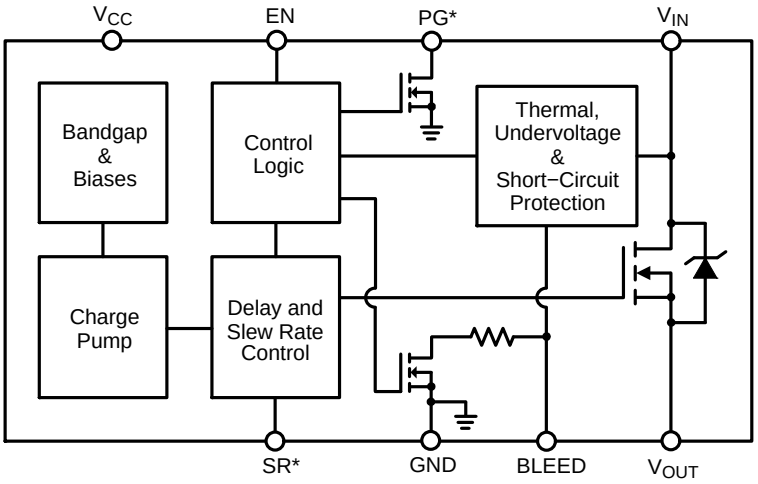

Figure 1. Block Diagram
(*Note: either PG or SR available for each part)

ON Semiconductor®

www.onsemi.com

R_{ON} TYP	V_{CC}	V_{IN}	I_{MAX_DC}*
9.5 mΩ	3.3 V	1.8 V	10.5 A
10.1 mΩ	3.3 V	5.0 V	
12.8 mΩ	3.3 V	12 V	

*I_{MAX_DC} is defined as the maximum steady state current the load switch can pass at room ambient temperature without entering thermal lockout.

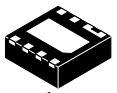

DFN8, 2x2
CASE 506CC

MARKING DIAGRAM

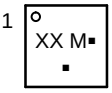

XX = PH for NCP45520−H
= PL for NCP45520−L
= SH for NCP45521−H
= SL for NCP45521−L
M = Date Code
▪ = Pb−Free Package
(Note: Microdot may be in either location)

PIN CONFIGURATION

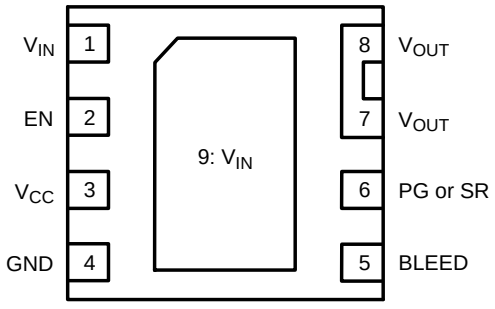

(Top View)

ORDERING INFORMATION

See detailed ordering and shipping information on page 14 of this data sheet.

© Semiconductor Components Industries, LLC, 2014

Table 1. PIN DESCRIPTION

Pin	Name	Function
1, 9	V_{IN}	Drain of MOSFET (0.5 V – 13.5 V), Pin 1 must be connected to Pin 9
2	EN	NCP45520−H & NCP45521−H − Active−high digital input used to turn on the MOSFET, pin has an internal pull down resistor to GND
		NCP45520−L & NCP45521−L − Active−low digital input used to turn on the MOSFET, pin has an internal pull up resistor to V_{CC}
3	V_{CC}	Supply voltage to controller (3.0 V − 5.5 V)
4	GND	Controller ground
5	BLEED	Load bleed connection, must be tied to V_{OUT} either directly or through a resistor ≤ 1 kΩ
6	PG	NCP45520 − Active−high, open−drain output that indicates when the gate of the MOSFET is fully charged, external pull up resistor ≥ 1 kΩ to an external voltage source required; tie to GND if not used
	SR	NCP45521 − Slew rate adjustment; float if not used
7, 8	V_{OUT}	Source of MOSFET connected to load

Table 2. ABSOLUTE MAXIMUM RATINGS

Rating	Symbol	Value	Unit
Supply Voltage Range	V_{CC}	−0.3 to 6	V
Input Voltage Range	V_{IN}	−0.3 to 18	V
Output Voltage Range	V_{OUT}	−0.3 to 18	V
EN Digital Input Range	V_{EN}	−0.3 to (V_{CC} + 0.3)	V
PG Output Voltage Range (Note 1)	V_{PG}	−0.3 to 6	V
Thermal Resistance, Junction−to−Ambient, Steady State (Note 2)	$R_{\theta JA}$	40.0	°C/W
Thermal Resistance, Junction−to−Ambient, Steady State (Note 3)	$R_{\theta JA}$	72.7	°C/W
Thermal Resistance, Junction−to−Case (V_{IN} Paddle)	$R_{\theta JC}$	5.3	°C/W
Continuous MOSFET Current @ T_A = 25°C (Notes 2 and 4)	I_{MAX}	10.5	A
Continuous MOSFET Current @ T_A = 25°C (Notes 3 and 4)	I_{MAX}	7.8	A
Transient MOSFET Current (for up to 500 μs)	I_{MAX_TRANS}	24	A
Total Power Dissipation @ T_A = 25°C (Note 2) Derate above T_A = 25°C	P_D	2.50 24.9	W mW/°C
Total Power Dissipation @ T_A = 25°C (Note 3) Derate above T_A = 25°C	P_D	1.37 13.8	W mW/°C
Storage Temperature Range	T_{STG}	−40 to 150	°C
Lead Temperature, Soldering (10 sec.)	T_{SLD}	260	°C
ESD Capability, Human Body Model (Notes 5 and 6)	ESD_{HBM}	3.0	kV
ESD Capability, Machine Model (Note 5)	ESD_{MM}	200	V
ESD Capability, Charged Device Model (Note 5)	ESD_{CDM}	1.0	kV
Latch−up Current Immunity (Notes 5 and 6)	LU	100	mA

Stresses exceeding those listed in the Maximum Ratings table may damage the device. If any of these limits are exceeded, device functionality should not be assumed, damage may occur and reliability may be affected.

1. NCP45520 only. PG is an open−drain output that requires an external pull up resistor ≥ 1 kΩ to an external voltage source.
2. Surface−mounted on FR4 board using 1 sq−in pad, 1 oz Cu.
3. Surface−mounted on FR4 board using the minimum recommended pad size, 1 oz Cu.
4. Ensure that the expected operating MOSFET current will not cause the Short−Circuit Protection to turn the MOSFET off undesirably.
5. Tested by the following methods @ T_A = 25°C:
   ESD Human Body Model tested per JESD22−A114
   ESD Machine Model tested per JESD22−A115
   ESD Charged Device Model tested per JESD22−C101
   Latch−up Current tested per JESD78
6. Rating is for all pins except for V_{IN} and V_{OUT} which are tied to the internal MOSFET's Drain and Source. Typical MOSFET ESD performance for V_{IN} and V_{OUT} should be expected and these devices should be treated as ESD sensitive.

Table 3. OPERATING RANGES

Rating	Symbol	Min	Max	Unit
Supply Voltage	V_{CC}	3	5.5	V
Input Voltage	V_{IN}	0.5	13.5	V
Ground	GND		0	V
Ambient Temperature	T_A	−40	85	°C
Junction Temperature	T_J	−40	125	°C
OFF to ON Transition Energy Dissipation Limit (See application section)	E_{TRANS}	0	100	mJ

Table 4. ELECTRICAL CHARACTERISTICS (T_J = 25°C unless otherwise specified)

Parameter	**Conditions** (Note 7)	Symbol	Min	Typ	Max	Unit
MOSFET						
On−Resistance	V_{CC} = 3.3 V; V_{IN} = 1.8 V	R_{ON}		9.5	12.7	mΩ
	V_{CC} = 3.3 V; V_{IN} = 5 V			10.1	13.9	
	V_{CC} = 3.3 V; V_{IN} = 12 V			12.8	22.5	
Leakage Current (Note 8)	V_{EN} = 0 V; V_{IN} = 13.5 V	I_{LEAK}		0.1	1	μA
CONTROLLER						
Supply Standby Current (Note 9)	V_{EN} = 0 V; V_{CC} = 3 V	I_{STBY}		0.65	2	μA
	V_{EN} = 0 V; V_{CC} = 5.5 V			3.2	4.5	
Supply Dynamic Current (Note 10)	V_{EN} = V_{CC} = 3 V; V_{IN} = 12 V	I_{DYN}		280	400	μA
	V_{EN} = V_{CC} = 5.5 V; V_{IN} = 1.8 V			530	750	
Bleed Resistance	V_{EN} = 0 V; V_{CC} = 3 V	R_{BLEED}	86	115	144	Ω
	V_{EN} = 0 V; V_{CC} = 5.5 V		72	97	121	
Bleed Pin Leakage Current	V_{EN} = V_{CC} = 3 V, V_{IN} = 1.8 V	I_{BLEED}		6	10	μA
	V_{EN} = V_{CC} = 3 V, V_{IN} = 12 V			60	70	
EN Input High Voltage	V_{CC} = 3 V − 5.5 V	V_{IH}	2			V
EN Input Low Voltage	V_{CC} = 3 V − 5.5 V	V_{IL}			0.8	V
EN Input Leakage Current	NCP45520−H; NCP45521−H; V_{EN} = 0 V	I_{IL}		90	500	nA
	NCP45520−L; NCP45521−L; V_{EN} = 5.5 V	I_{IH}		90	500	
EN Pull Down Resistance	NCP45520−H; NCP45521−H	R_{PD}	76	100	124	kΩ
EN Pull Up Resistance	NCP45520−L; NCP45521−L	R_{PU}	76	100	124	kΩ
PG Output Low Voltage (Note 11)	NCP45520; V_{CC} = 3 V; I_{SINK} = 5 mA	V_{OL}			0.2	V
PG Output Leakage Current (Note 12)	NCP45520; V_{CC} = 3 V; V_{TERM} = 3.3 V	I_{OH}		5	100	nA
Slew Rate Control Constant (Note 13)	NCP45521; V_{CC} = 3 V	K_{SR}	24	31	38	μA
FAULT PROTECTIONS						
Thermal Shutdown Threshold (Note 14)	V_{CC} = 3 V − 5.5 V	T_{SDT}		145		°C
Thermal Shutdown Hysteresis (Note 14)	V_{CC} = 3 V − 5.5 V	T_{HYS}		20		°C
V_{IN} Undervoltage Lockout Threshold	V_{CC} = 3 V	V_{UVLO}	0.25	0.35	0.45	V
V_{IN} Undervoltage Lockout Hysteresis	V_{CC} = 3 V	V_{HYS}	20	50	70	mV
Short−Circuit Protection Threshold	V_{CC} = 3 V; V_{IN} = 0.5 V	V_{SC}	200	265	350	mV
	V_{CC} = 3 V; V_{IN} = 13.5 V		100	285	500	

Product parametric performance is indicated in the Electrical Characteristics for the listed test conditions, unless otherwise noted. Product performance may not be indicated by the Electrical Characteristics if operated under different conditions.

7. V_{EN} shown only for NCP45520−H, NCP45521−H (EN Active−High) unless otherwise specified.
8. Average current from V_{IN} to V_{OUT} with MOSFET turned off.
9. Average current from V_{CC} to GND with MOSFET turned off.
10. Average current from V_{CC} to GND after charge up time of MOSFET.
11. PG is an open-drain output that is pulled low when the MOSFET is disabled.
12. PG is an open-drain output that is not driven when the gate of the MOSFET is fully charged, requires an external pull up resistor ≥ 1 kΩ to an external voltage source, V_{TERM}.
13. See Applications Information section for details on how to adjust the slew rate.
14. Operation above T_J = 125°C is not guaranteed.

Table 5. SWITCHING CHARACTERISTICS (T_J = 25°C unless otherwise specified) (Notes 15 and 16)

Parameter	Conditions	Symbol	Min	Typ	Max	Unit
Output Slew Rate (Note 17)	V_{CC} = 3.3 V; V_{IN} = 1.8 V	SR		11.9		kV/s
	V_{CC} = 5.0 V; V_{IN} = 1.8 V			12.1		
	V_{CC} = 3.3 V; V_{IN} = 12 V			13.5		
	V_{CC} = 5.0 V; V_{IN} = 12 V			13.9		
Output Turn−on Delay (Note 17)	V_{CC} = 3.3 V; V_{IN} = 1.8 V	T_{ON}		220		μs
	V_{CC} = 5.0 V; V_{IN} = 1.8 V			185		
	V_{CC} = 3.3 V; V_{IN} = 12 V			270		
	V_{CC} = 5.0 V; V_{IN} = 12 V			260		
Output Turn−off Delay (Note 17)	V_{CC} = 3.3 V; V_{IN} = 1.8 V	T_{OFF}		1.2		μs
	V_{CC} = 5.0 V; V_{IN} = 1.8 V			0.9		
	V_{CC} = 3.3 V; V_{IN} = 12 V			0.4		
	V_{CC} = 5.0 V; V_{IN} = 12 V			0.2		
Power Good Turn−on Time (Note 18)	V_{CC} = 3.3 V; V_{IN} = 1.8 V	$T_{PG,ON}$		0.91		ms
	V_{CC} = 5.0 V; V_{IN} = 1.8 V			0.93		
	V_{CC} = 3.3 V; V_{IN} = 12 V			1.33		
	V_{CC} = 5.0 V; V_{IN} = 12 V			1.21		
Power Good Turn−off Time (Note 18)	V_{CC} = 3.3 V; V_{IN} = 1.8 V	$T_{PG,OFF}$		21		ns
	V_{CC} = 5.0 V; V_{IN} = 1.8 V			15		
	V_{CC} = 3.3 V; V_{IN} = 12 V			21		
	V_{CC} = 5.0 V; V_{IN} = 12 V			15		

15. See below figure for Test Circuit and Timing Diagram.
16. Tested with the following conditions: $V_{TERM} = V_{CC}$; R_{PG} = 100 kΩ; R_L = 10 Ω; C_L = 0.1 μF.
17. Applies to NCP45520 and NCP45521.
18. Applies only to NCP45520.

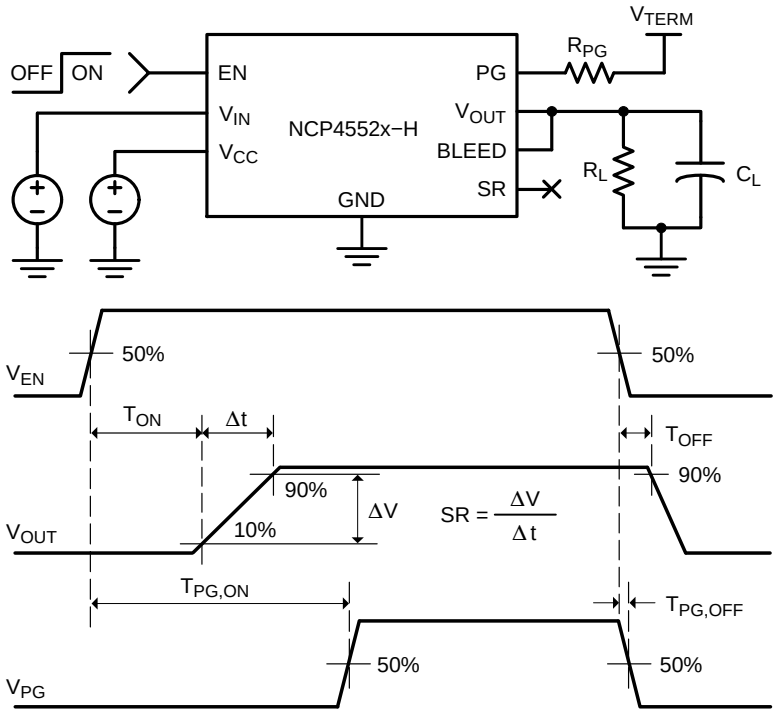

Figure 2. Switching Characteristics Test Circuit and Timing Diagram

TYPICAL CHARACTERISTICS

(T_J = 25°C unless otherwise specified)

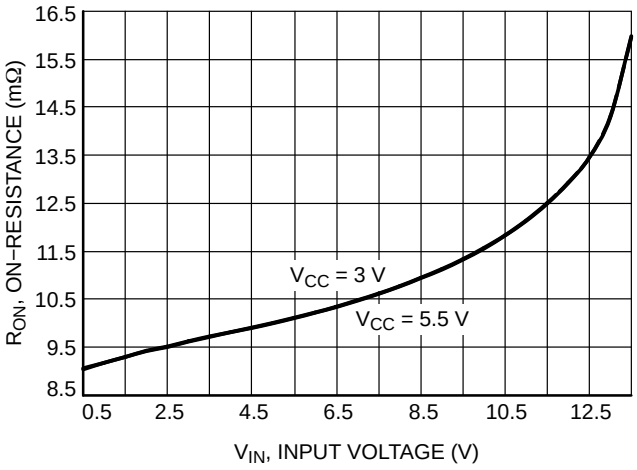

Figure 3. On−Resistance vs. Input Voltage

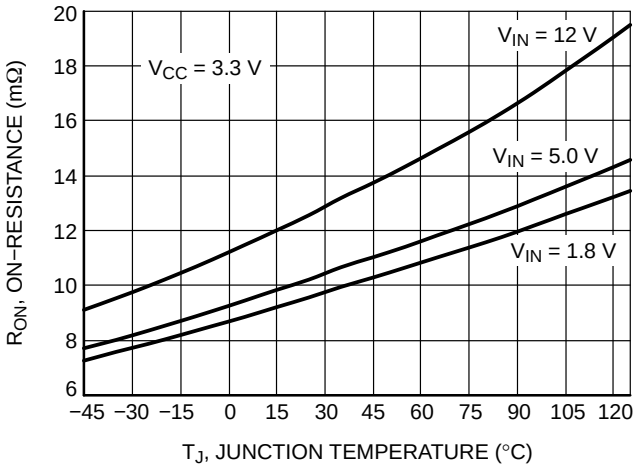

Figure 4. On−Resistance vs. Temperature

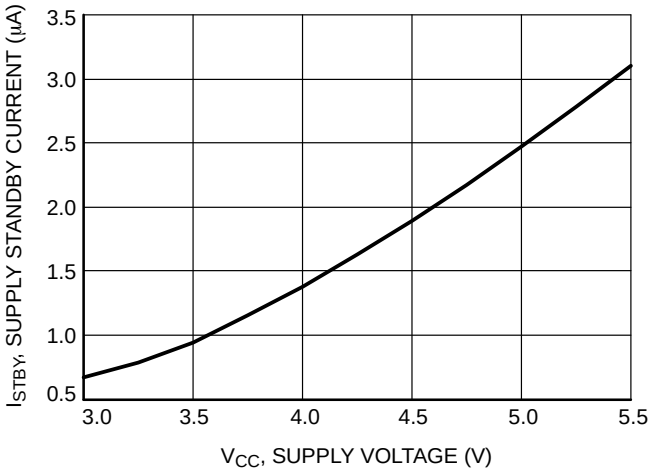

Figure 5. Supply Standby Current vs. Supply Voltage

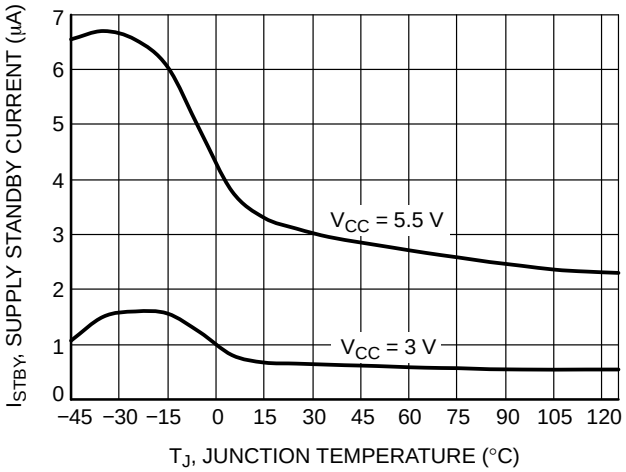

Figure 6. Supply Standby Current vs. Temperature

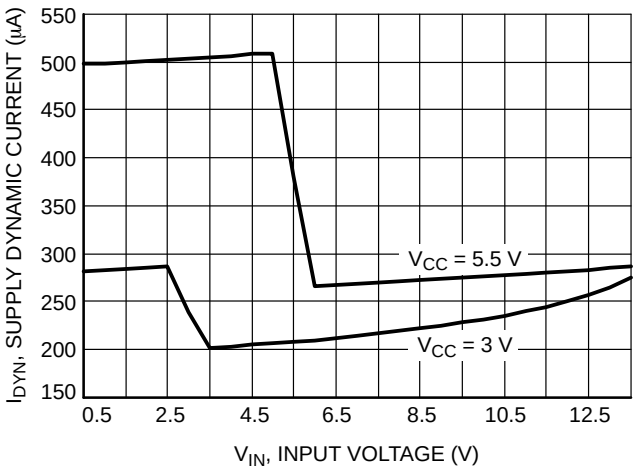

Figure 7. Supply Dynamic Current vs. Input Voltage

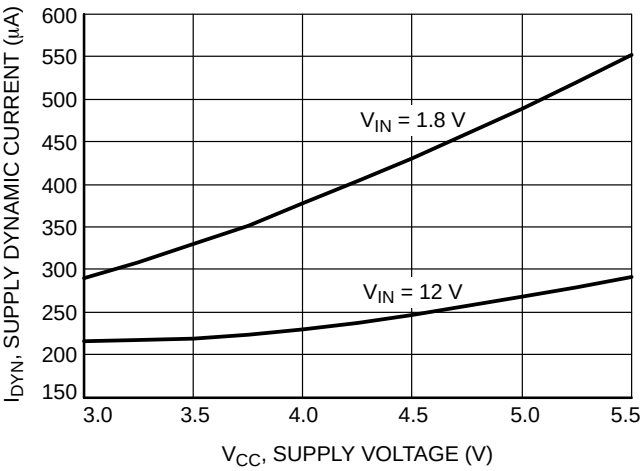

Figure 8. Supply Dynamic Current vs. Supply Voltage

TYPICAL CHARACTERISTICS

(T_J = 25°C unless otherwise specified)

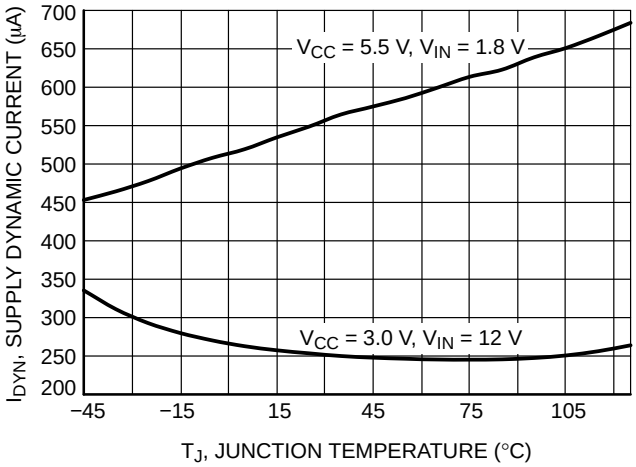

Figure 9. Supply Dynamic Current vs. Temperature

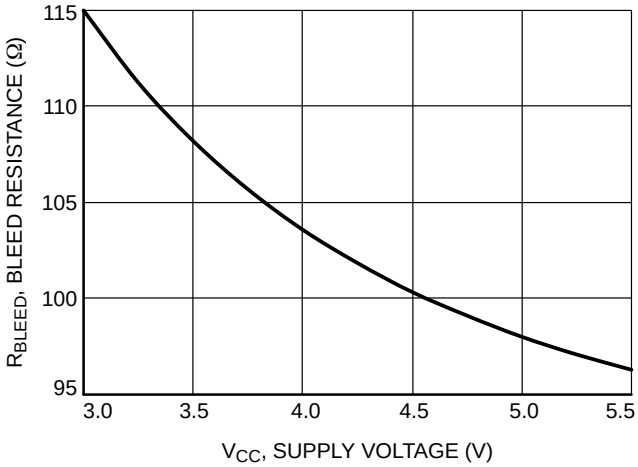

Figure 10. Bleed Resistance vs. Supply Voltage

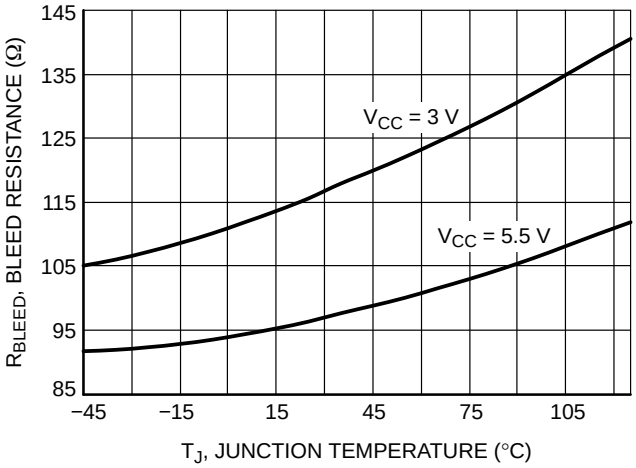

Figure 11. Bleed Resistance vs. Temperature

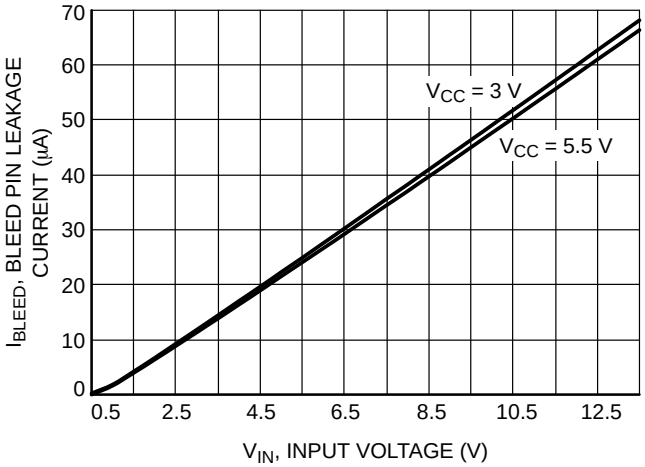

Figure 12. Bleed Pin Leakage Current vs. Input Voltage

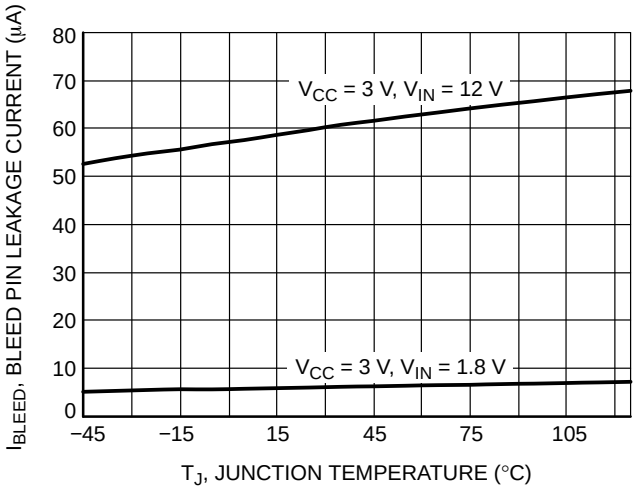

Figure 13. Bleed Pin Leakage Current vs. Temperature

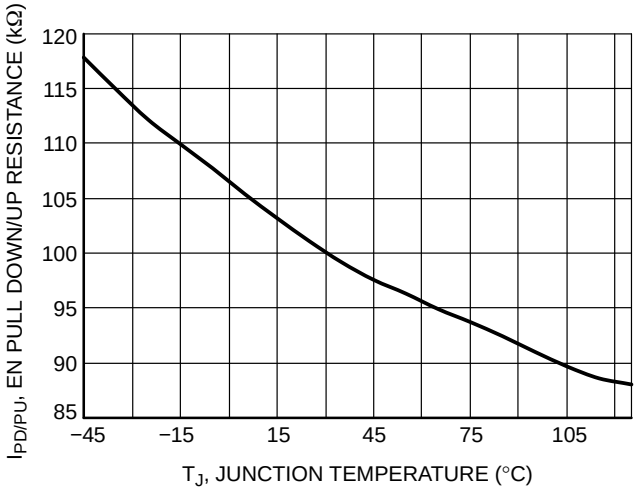

Figure 14. EN Pull Down/Up Resistance vs. Temperature

TYPICAL CHARACTERISTICS

(T_J = 25°C unless otherwise specified)

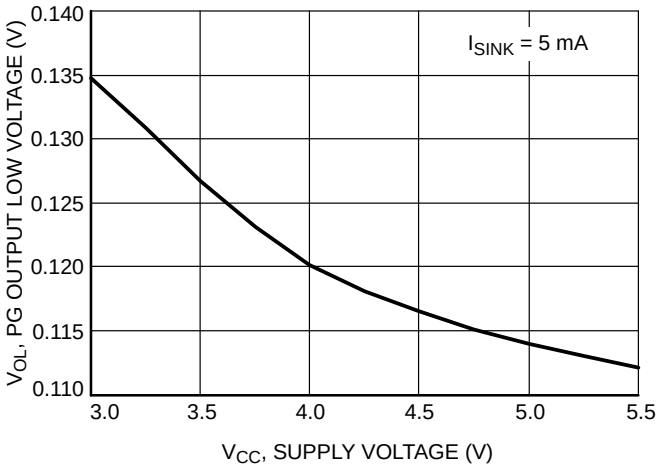

Figure 15. PG Output Low Voltage vs. Supply Voltage

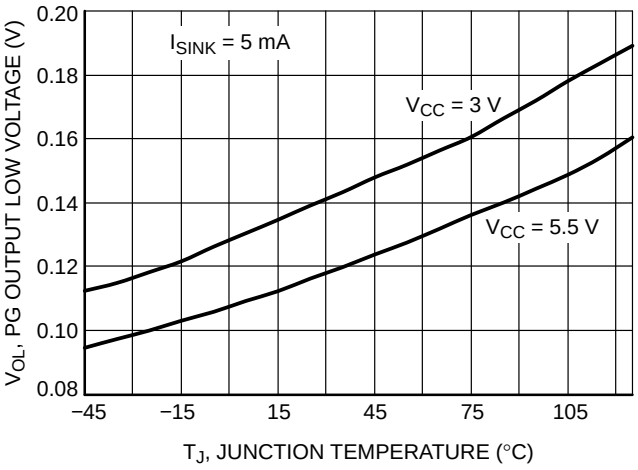

Figure 16. PG Output Low Voltage vs. Temperature

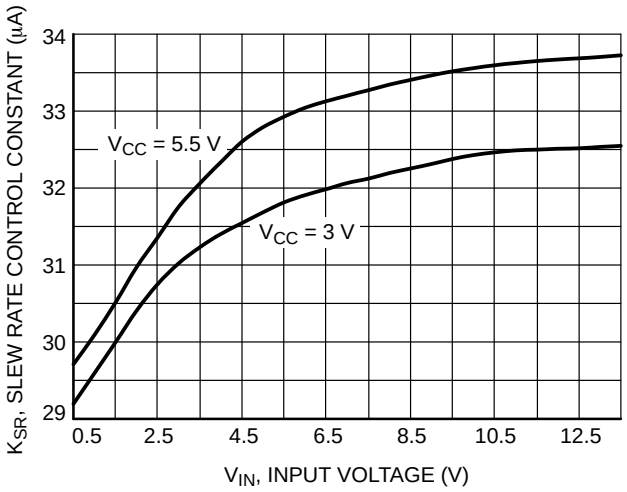

Figure 17. Slew Rate Control Constant vs. Input Voltage

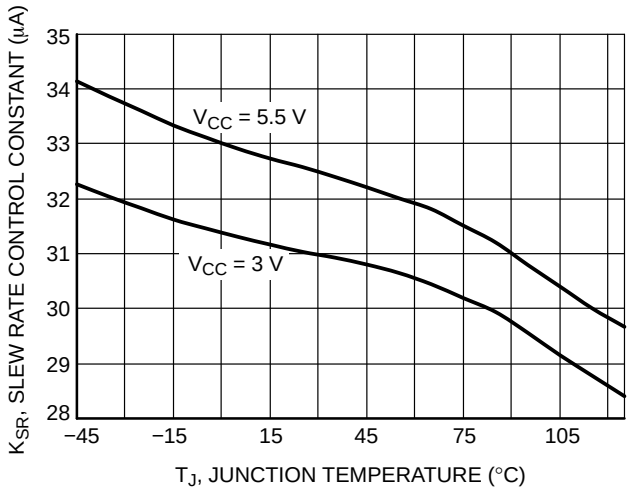

Figure 18. Slew Rate Control Constant vs. Temperature

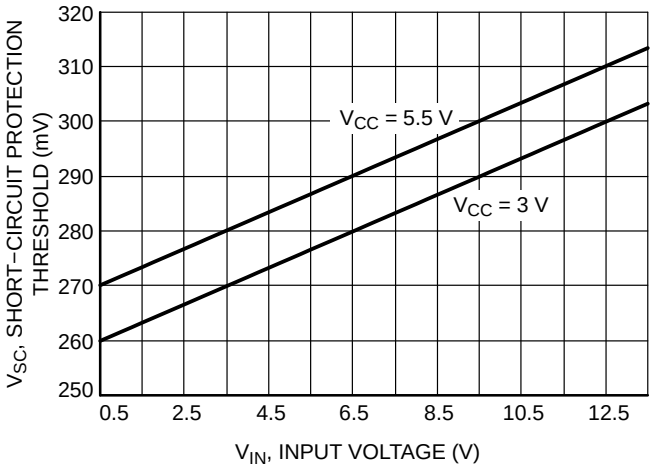

Figure 19. Short−Circuit Protection Threshold vs. Input Voltage

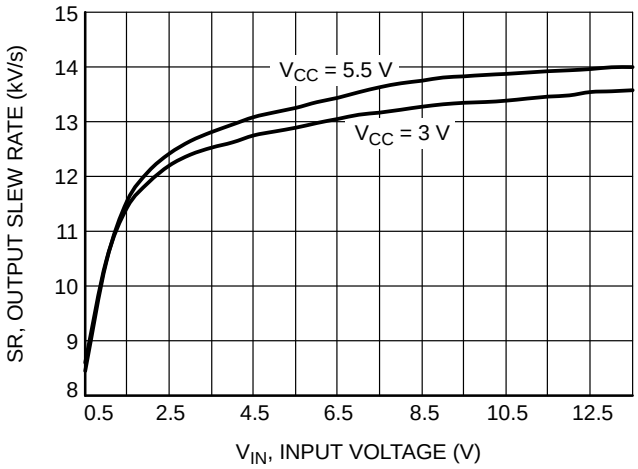

Figure 20. Output Slew Rate vs. Input Voltage

TYPICAL CHARACTERISTICS

(T_J = 25°C unless otherwise specified)

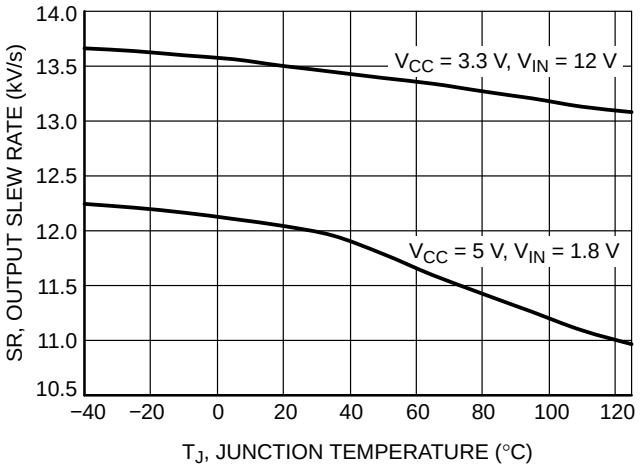

Figure 21. Output Slew Rate vs. Temperature

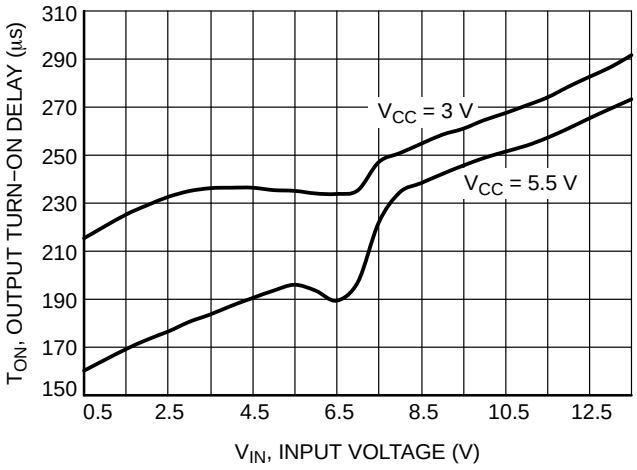

Figure 22. Output Turn−on Delay vs. Input Voltage

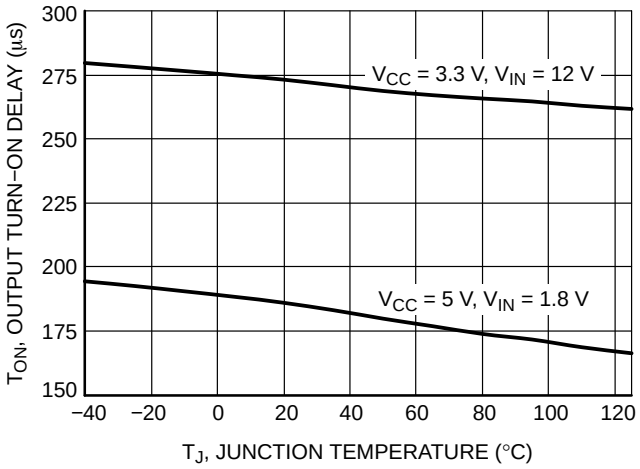

Figure 23. Output Turn−on Delay vs. Temperature

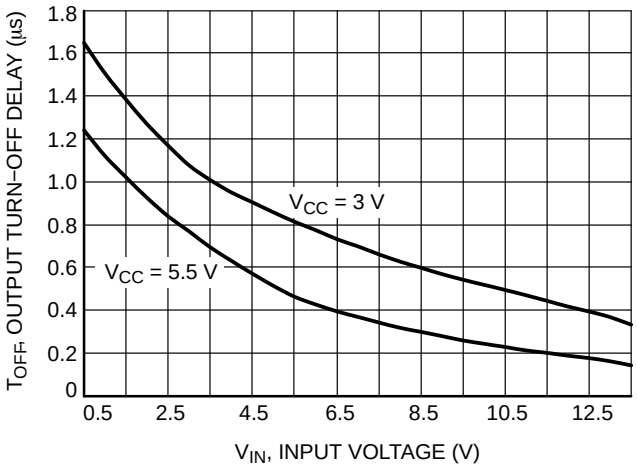

Figure 24. Output Turn−off Delay vs. Input Voltage

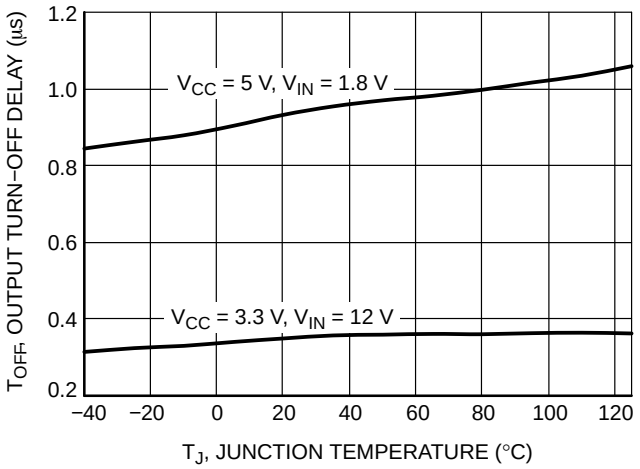

Figure 25. Output Turn−off Delay vs. Temperature

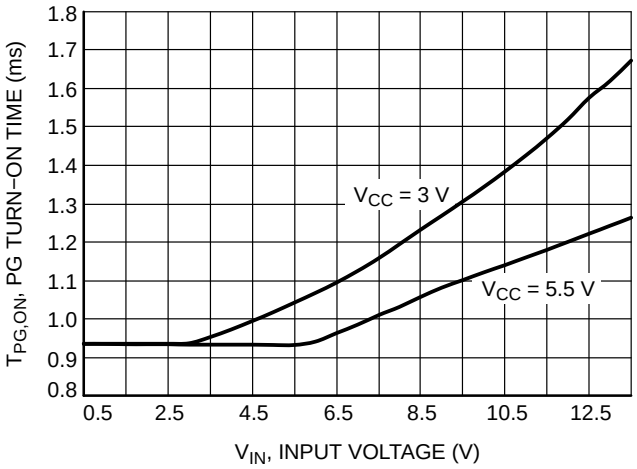

Figure 26. Power Good Turn−on Time vs. Input Voltage

TYPICAL CHARACTERISTICS

(T_J = 25°C unless otherwise specified)

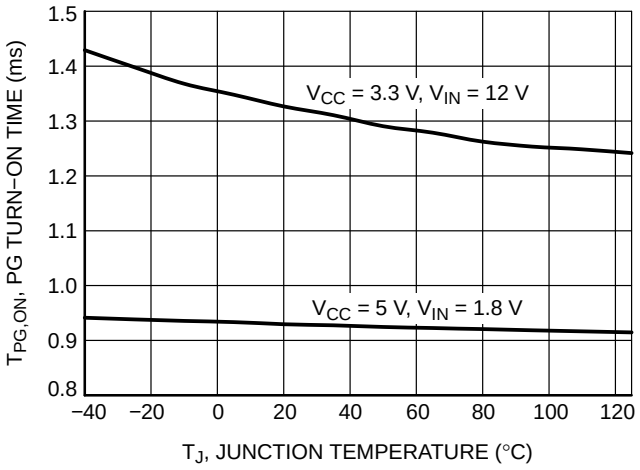

Figure 27. Power Good Turn−on Time vs. Temperature

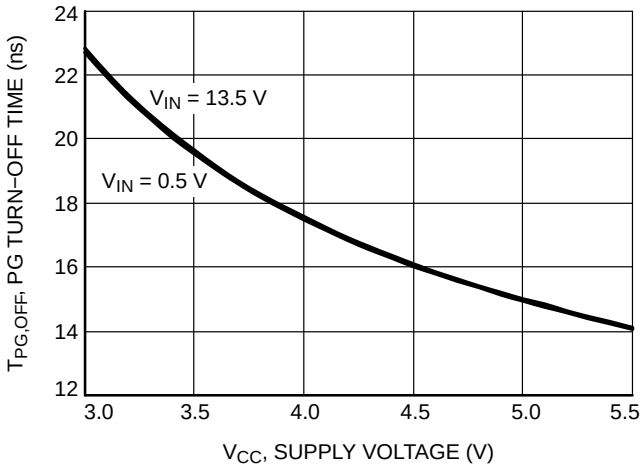

Figure 28. Power Good Turn−off Time vs. Supply Voltage

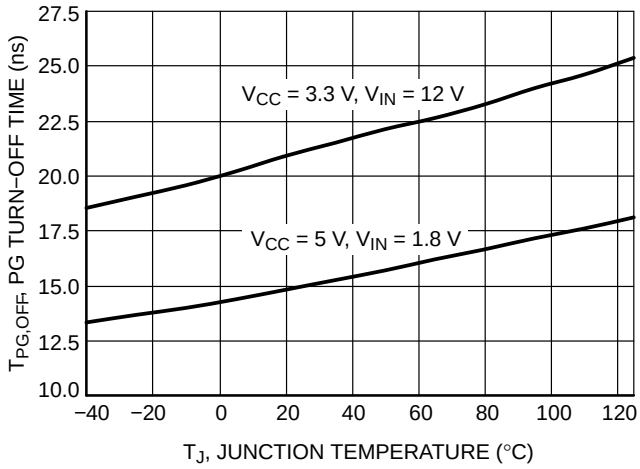

Figure 29. Power Good Turn−off Time vs. Temperature

APPLICATIONS INFORMATION

Enable Control

Both the NCP45520 and the NCP45521 have two part numbers, NCP4552x-H and NCP4552x-L, that only differ in the polarity of the enable control.

The NCP4552x-H devices allow for enabling the MOSFET in an active-high configuration. When the V_{CC} supply pin has an adequate voltage applied and the EN pin is at a logic high level, the MOSFET will be enabled. Similarly, when the EN pin is at a logic low level, the MOSFET will be disabled. An internal pull down resistor to ground on the EN pin ensures that the MOSFET will be disabled when not being driven.

The NCP4552x-L devices allow for enabling the MOSFET in an active-low configuration. When the V_{CC} supply pin has an adequate voltage applied and the EN pin is at a logic low level, the MOSFET will be enabled. Similarly, when the EN pin is at a logic high level, the MOSFET will be disabled. An internal pull up resistor to V_{CC} on the EN pin ensures that the MOSFET will be disabled when not being driven.

Power Sequencing

The NCP4552x devices will function with any power sequence, but the output turn−on delay performance may vary from what is specified. To achieve the specified performance, there are two recommended power sequences:

1) $V_{CC} \rightarrow V_{IN} \rightarrow V_{EN}$
2) $V_{IN} \rightarrow V_{CC} \rightarrow V_{EN}$

V_{CC} must be at 2 V or higher when EN is asserted to ensure that the enable is latched properly for correct operation. If EN comes up before V_{CC} reaches 2 V, then the EN may not take effect.

Load Bleed (Quick Discharge)

The NCP4552x devices have an internal bleed resistor, R_{BLEED}, which is used to bleed the charge off of the load to ground after the MOSFET has been disabled. In series with the bleed resistor is a bleed switch that is enabled whenever the MOSFET is disabled. The MOSFET and the bleed switch are never concurrently active.

It is required that the BLEED pin be connected to V_{OUT} either directly (as shown in Figures 31 and 34) or through an external resistor, R_{EXT} (as shown in Figures 30 and 33). R_{EXT} should not exceed 1 kΩ and can be used to increase the total bleed resistance.

Care must be taken to ensure that the power dissipated across R_{BLEED} is kept at a safe level. The maximum continuous power that can be dissipated across R_{BLEED} is 0.4 W. R_{EXT} can be used to decrease the amount of power dissipated across R_{BLEED}.

Power Good

The NCP45520 devices have a power good output (PG) that can be used to indicate when the gate of the MOSFET is fully charged. The PG pin is an active-high, open-drain output that requires an external pull up resistor, R_{PG}, greater than or equal to 1 kΩ to an external voltage source, V_{TERM}, that is compatible with input levels of all devices connected to this pin (as shown in Figures 30 and 31).

The power good output can be used as the enable signal for other active−high devices in the system (as shown in Figure 32). This allows for guaranteed by design power sequencing and reduces the number of enable signals needed from the system controller. If the power good feature is not used in the application, the PG pin should be tied to GND.

Slew Rate Control

The NCP4552x devices are equipped with controlled output slew rate which provides soft start functionality. This limits the inrush current caused by capacitor charging and enables these devices to be used in hot swap applications.

The slew rate of the NCP45521 can be decreased with an external capacitor added between the SR pin and ground (as shown in Figures 33 and 34). With an external capacitor present, the slew rate can be determined by the following equation:

$$\text{Slew Rate} = \frac{K_{SR}}{C_{SR}}\ [V/s] \qquad \text{(eq. 1)}$$

where K_{SR} is the specified slew rate control constant, found in Table 4, and C_{SR} is the slew rate control capacitor added between the SR pin and ground. The slew rate of the device will always be the lower of the default slew rate and the adjusted slew rate. Therefore, if the C_{SR} is not large enough to decrease the slew rate more than the specified default value, the slew rate of the device will be the default value. The SR pin can be left floating if the slew rate does not need to be decreased.

Short−Circuit Protection

The NCP4552x devices are equipped with short−circuit protection that is used to help protect the part and the system from a sudden high−current event, such as the output, V_{OUT}, being shorted to ground. This circuitry is only active when the gate of the MOSFET is fully charged.

Once active, the circuitry monitors the difference in the voltage on the V_{IN} pin and the voltage on the BLEED pin. In order for the V_{OUT} voltage to be monitored through the BLEED pin, it is required that the BLEED pin be connected to V_{OUT} either directly (as shown in Figures 31 and 34) or through a resistor, R_{EXT} (as shown in Figures 30 and 33), which should not exceed 1 kΩ. With the BLEED pin connected to V_{OUT}, the short−circuit protection is able to monitor the voltage drop across the MOSFET.

If the voltage drop across the MOSFET is greater than or equal to the short−circuit protection threshold voltage, the MOSFET is immediately turned off and the load bleed is activated. The part remains latched in this off state until EN is toggled or V_{CC} supply voltage is cycled, at which point the MOSFET will be turned on in a controlled fashion with the normal output turn−on delay and slew rate. The current

through the MOSFET that will cause a short−circuit event can be calculated by dividing the short−circuit protection threshold by the expected on−resistance of the MOSFET.

Thermal Shutdown

The thermal shutdown of the NCP4552x devices protects the part from internally or externally generated excessive temperatures. This circuitry is disabled when EN is not active to reduce standby current. When an over-temperature condition is detected, the MOSFET is immediately turned off and the load bleed is activated.

The part comes out of thermal shutdown when the junction temperature decreases to a safe operating temperature as dictated by the thermal hysteresis. Upon exiting a thermal shutdown state, and if EN remains active, the MOSFET will be turned on in a controlled fashion with the normal output turn-on delay and slew rate.

Undervoltage Lockout

The undervoltage lockout of the NCP4552x devices turns the MOSFET off and activates the load bleed when the input voltage, V_{IN}, is less than or equal to the undervoltage lockout threshold. This circuitry is disabled when EN is not active to reduce standby current.

If the V_{IN} voltage rises above the undervoltage lockout threshold, and EN remains active, the MOSFET will be turned on in a controlled fashion with the normal output turn-on delay and slew rate.

Capacitive Load

The peak in−rush current associated with the initial charging of the application load capacitance needs to stay below the specified I_{MAX}. CL (capacitive load) should be less than Cmax as defined by the following equation:

$$C_{max} = \frac{I_{max}}{SR_{typ}} \qquad \text{(eq. 2)}$$

Where I_{MAX} is the maximum load current, and SRtyp is the typical default slew rate when no external load capacitor is added to the SR pin.

OFF to ON Transition Energy Dissipation

The energy dissipation due to load current traveling from V_{IN} to V_{OUT} is very low during steady state operation due to the low R_{ON}. When the EN signal is asserted high, the load switch transitions from an OFF state to an ON state. During this time, the resistance from V_{IN} to V_{OUT} transitions from high impedance to R_{ON}, and additional energy is dissipated in the device for a short period of time. The worst case energy dissipated during the OFF to ON transition can be approximated by the following equation:

$$E = 0.5 \cdot V_{IN} \cdot \left(I_{INRUSH} + 0.8 \cdot I_{LOAD}\right) \cdot dt \qquad \text{(eq. 3)}$$

Where V_{IN} is the voltage on the V_{IN} pin, I_{INRUSH} is the inrush current caused by capacitive loading on V_{OUT}, and dt is the time it takes V_{OUT} to rise from 0 V to V_{IN}. I_{INRUSH} can be calculated using the following equation:

$$I_{INRUSH} = \frac{dv}{dt} \cdot C_L \qquad \text{(eq. 4)}$$

Where dv/dt is the programmed slew rate, and C_L is the capacitive loading on V_{OUT}. To prevent thermal lockout or damage to the device, the energy dissipated during the OFF to ON transition should be limited to E_{TRANS} listed in operating ranges table.

ecoSWITCH LAYOUT GUIDELINES

Electrical Layout Considerations

Correct physical PCB layout is important for proper low noise accurate operation of all ecoSWITCH products.

Power Planes: The ecoSWITCH is optimized for extremely low Ron resistance, however, improper PCB layout can substantially increase source to load series resistance by adding PCB board parasitic resistance. Solid connections to the VIN and VOUT pins of the ecoSWITCH to copper planes should be used to achieve low series resistance and good thermal dissipation. The ecoSWITCH requires ample heat dissipation for correct thermal lockout operation. The internal FET dissipates load condition dependent amounts of power in the milliseconds following the rising edge of enable, and providing good thermal conduction from the packaging to the board is critical. Direct coupling of VIN to VOUT should be avoided, as this will adversely affect slew rates. The figure below shows an example of correct power plane layout. The number and location of pins for specific ecoSWITCH products may vary. This demonstrates large planes for both VIN and VOUT, while avoiding capacitive coupling between the two planes.

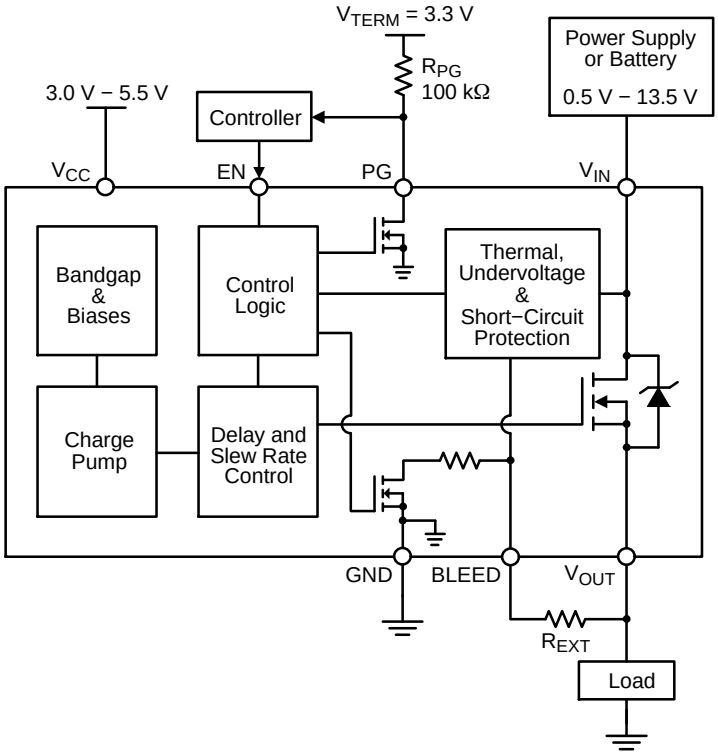

Figure 30. NCP45520 Typical Application Diagram − Load Switch

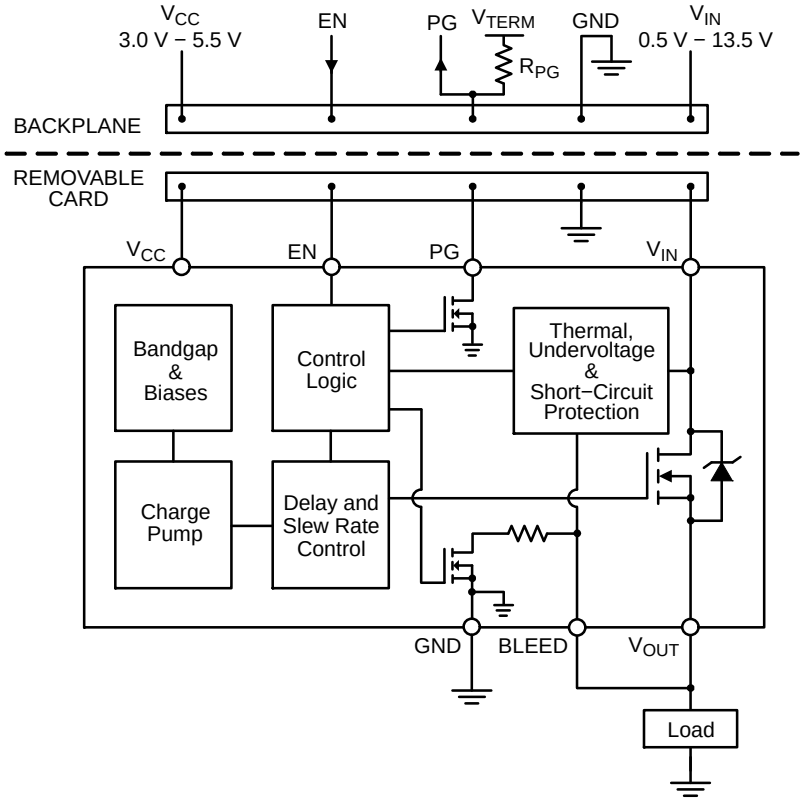

Figure 31. NCP45520 Typical Application Diagram − Hot Swap

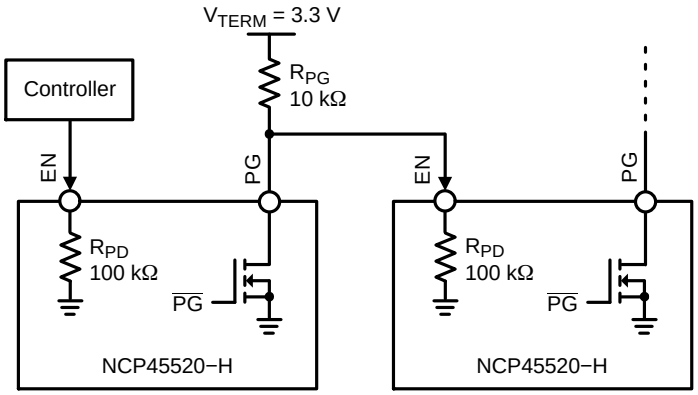

Figure 32. NCP45520 Simplified Application Diagram − Power Sequencing with PG Output

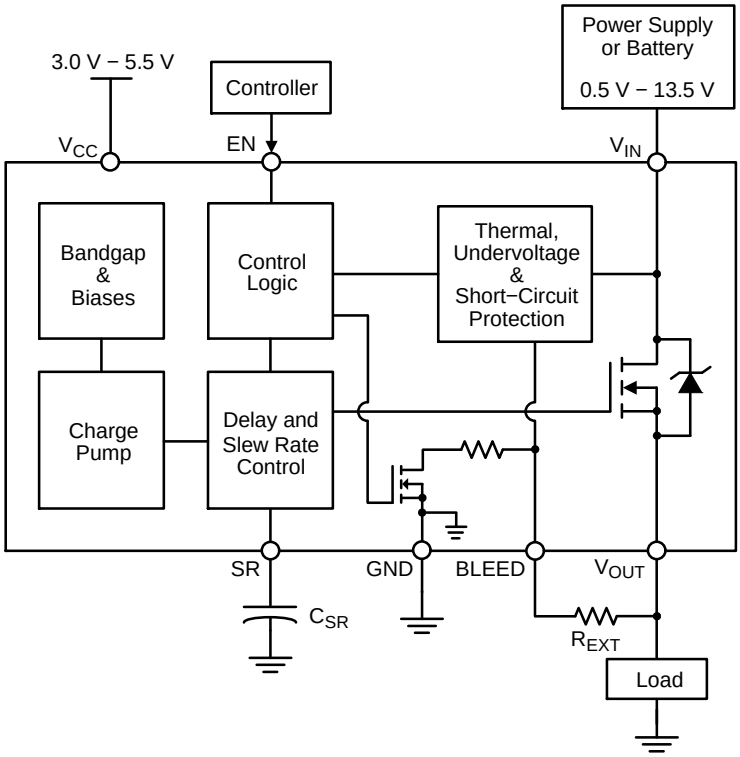

Figure 33. NCP45521 Typical Application Diagram − Load Switch

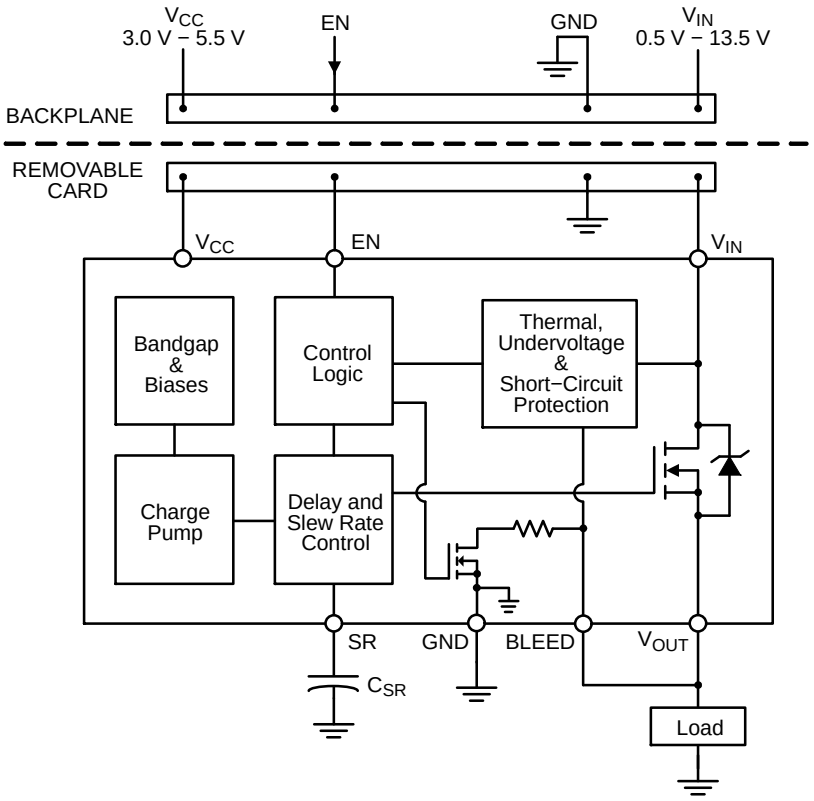

Figure 34. NCP45521 Typical Application Diagram − Hot Swap

ORDERING INFORMATION

Device	Pin 6 Functionality	EN Polarity	Package	Shipping†
NCP45520IMNTWG−H	PG	Active−High	DFN8 (Pb−Free)	3000 / Tape & Reel
NCP45520IMNTWG−L	PG	Active−Low		
NCP45521IMNTWG−H	SR	Active−High		
NCP45521IMNTWG−L	SR	Active−Low		

†For information on tape and reel specifications, including part orientation and tape sizes, please refer to our Tape and Reel Packaging Specifications Brochure, BRD8011/D.

ecoSWITCH is a trademark of Semiconductor Components Industries, LLC (SCILLC).

MECHANICAL CASE OUTLINE
PACKAGE DIMENSIONS

ON Semiconductor®

DFN8 2x2, 0.5P
CASE 506CC
ISSUE A

SCALE 2:1

DATE 24 JUN 2014

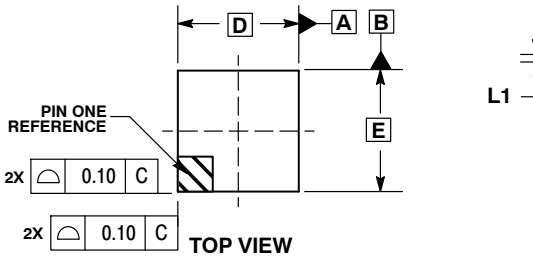

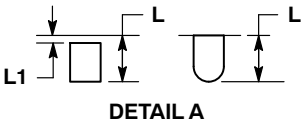

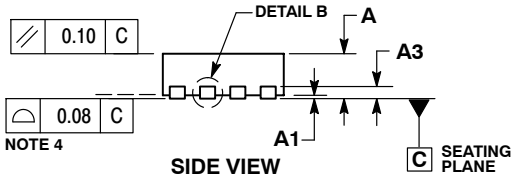

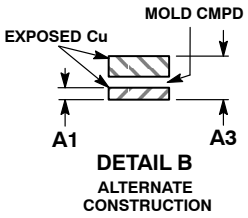

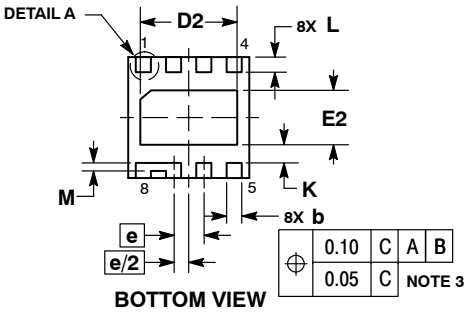

NOTES:
1. DIMENSIONING AND TOLERANCING PER ASME Y14.5M, 1994.
2. CONTROLLING DIMENSION: MILLIMETERS.
3. DIMENSION b APPLIES TO PLATED TERMINAL AND IS MEASURED BETWEEN 0.15 AND 0.30 MM FROM TERMINAL TIP.
4. COPLANARITY APPLIES TO THE EXPOSED PAD AS WELL AS THE TERMINALS.

	MILLIMETERS	
DIM	MIN	MAX
A	0.80	1.00
A1	0.00	0.05
A3	0.20 REF	
b	0.20	0.30
D	2.00 BSC	
D2	1.50	1.70
E	2.00 BSC	
E2	0.80	1.00
e	0.50 BSC	
K	0.20 REF	
L	0.18	0.38
L1	---	0.15
M	0.14 REF	

GENERIC MARKING DIAGRAM*

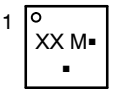

XX = Specific Device Code
M = Date Code
▪ = Pb−Free Package

(Note: Microdot may be in either location)

*This information is generic. Please refer to device data sheet for actual part marking. Pb−Free indicator, “G” or microdot “ ▪”, may or may not be present.

RECOMMENDED SOLDERING FOOTPRINT*

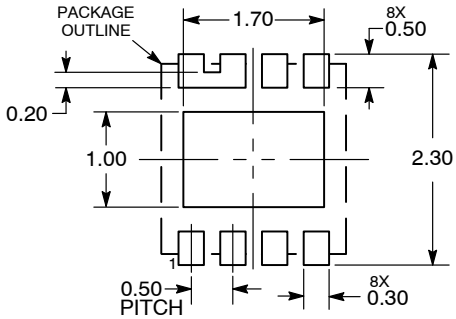

DIMENSIONS: MILLIMETERS

*For additional information on our Pb−Free strategy and soldering details, please download the ON Semiconductor Soldering and Mounting Techniques Reference Manual, SOLDERRM/D.

DOCUMENT NUMBER:	**98AON67172E**	Electronic versions are uncontrolled except when accessed directly from the Document Repository. Printed versions are uncontrolled except when stamped “CONTROLLED COPY” in red.	
DESCRIPTION:	**DFN8 2X2, 0.5P**		**PAGE 1 OF 1**

ON Semiconductor and ON are trademarks of Semiconductor Components Industries, LLC dba ON Semiconductor or its subsidiaries in the United States and/or other countries. ON Semiconductor reserves the right to make changes without further notice to any products herein. ON Semiconductor makes no warranty, representation or guarantee regarding the suitability of its products for any particular purpose, nor does ON Semiconductor assume any liability arising out of the application or use of any product or circuit, and specifically disclaims any and all liability, including without limitation special, consequential or incidental damages. ON Semiconductor does not convey any license under its patent rights nor the rights of others.

© Semiconductor Components Industries, LLC, 2019

onsemi, , and other names, marks, and brands are registered and/or common law trademarks of Semiconductor Components Industries, LLC dba "**onsemi**" or its affiliates and/or subsidiaries in the United States and/or other countries. **onsemi** owns the rights to a number of patents, trademarks, copyrights, trade secrets, and other intellectual property. A listing of **onsemi**'s product/patent coverage may be accessed at www.onsemi.com/site/pdf/Patent−Marking.pdf. **onsemi** reserves the right to make changes at any time to any products or information herein, without notice. The information herein is provided "as−is" and **onsemi** makes no warranty, representation or guarantee regarding the accuracy of the information, product features, availability, functionality, or suitability of its products for any particular purpose, nor does **onsemi** assume any liability arising out of the application or use of any product or circuit, and specifically disclaims any and all liability, including without limitation special, consequential or incidental damages. Buyer is responsible for its products and applications using **onsemi** products, including compliance with all laws, regulations and safety requirements or standards, regardless of any support or applications information provided by **onsemi**. "Typical" parameters which may be provided in **onsemi** data sheets and/or specifications can and do vary in different applications and actual performance may vary over time. All operating parameters, including "Typicals" must be validated for each customer application by customer's technical experts. **onsemi** does not convey any license under any of its intellectual property rights nor the rights of others. **onsemi** products are not designed, intended, or authorized for use as a critical component in life support systems or any FDA Class 3 medical devices or medical devices with a same or similar classification in a foreign jurisdiction or any devices intended for implantation in the human body. Should Buyer purchase or use **onsemi** products for any such unintended or unauthorized application, Buyer shall indemnify and hold **onsemi** and its officers, employees, subsidiaries, affiliates, and distributors harmless against all claims, costs, damages, and expenses, and reasonable attorney fees arising out of, directly or indirectly, any claim of personal injury or death associated with such unintended or unauthorized use, even if such claim alleges that **onsemi** was negligent regarding the design or manufacture of the part. **onsemi** is an Equal Opportunity/Affirmative Action Employer. This literature is subject to all applicable copyright laws and is not for resale in any manner.

ADDITIONAL INFORMATION

TECHNICAL PUBLICATIONS:
Technical Library: www.onsemi.com/design/resources/technical−documentation
onsemi Website: www.onsemi.com

ONLINE SUPPORT: www.onsemi.com/support
For additional information, please contact your local Sales Representative at www.onsemi.com/support/sales