NCP5355

12 V Synchronous Buck Power MOSFET Driver

The NCP5355 is a dual MOSFET gate driver optimized to drive the gates of both high− and low−side Power MOSFETs in a Synchronous Buck converter. The NCP5355 is an excellent companion to multiphase controllers that do not have integrated gate drivers, such as ON Semiconductor's NCP5314 or NCP5316. This architecture provides the power supply designer greater flexibility by being able to locate the gate drivers close to the MOSFETs.

Driving MOSFETs with a 12 V source as opposed to a 5.0 V can significantly reduce conduction losses. Optimized internal, adaptive nonoverlap circuitry further reduces switching losses by preventing simultaneous conduction of both MOSFETs.

The floating top driver design can accommodate MOSFET drain voltages as high as 26 V. Both gate outputs can be driven low by applying a low logic level to the Enable (EN) pin. An Undervoltage Lockout function ensures that both driver outputs are low when the supply voltage is low, and a Thermal Shutdown function provides the IC with overtemperature protection.

The NCP5355 has the same pinout as the NCP5351 5.0 V Gate Driver.

Features

- 8.0 V − 14 V Gate Drive Capability
- 2.0 A Peak Drive Current
- Rise and Fall Times < 15 ns Typical into 3300 pF
- Propagation Delay from Inputs to Outputs < 30 ns
- Adaptive Nonoverlap Time Optimized for Large Power MOSFETs
- Floating Top Driver Accommodates Applications Up to 26 V
- Undervoltage Lockout to Prevent Switching when the Input Voltage is Low
- Thermal Shutdown Protection Against Overtemperature
- TG to DRN Pulldown Resistor Prevents HV Supply−Induced Turn−On of Top MOSFET
- BG to PGND Pulldown Resistor Prevents Transient Turn On of Bottom MOSFET
- Internal Bootstrap Diode Reduces Parts Count and Total Solution Cost
- Pb−Free Package is Available

ON Semiconductor®

http://onsemi.com

MARKING DIAGRAMS



SOIC−8
D SUFFIX
CASE 751

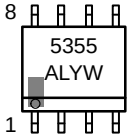



SOIC−8 EP
D SUFFIX
CASE 751AC

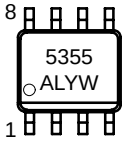

A = Assembly Location
L = Wafer Lot
Y = Year
W = Work Week

PIN CONNECTIONS

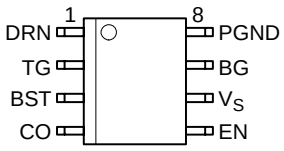

ORDERING INFORMATION

Device	Package	Shipping†
NCP5355D	SOIC−8	98 Units/Rail
NCP5355DR2	SOIC−8	2500 / Tape & Reel
NCP5355DR2G	SOIC−8 (Pb−Free)	2500 / Tape & Reel
NCP5355PDR2	SOIC−8 EP	2500 / Tape & Reel

†For information on tape and reel specifications, including part orientation and tape sizes, please refer to our Tape and Reel Packaging Specifications Brochure, BRD8011/D.

© Semiconductor Components Industries, LLC, 2004

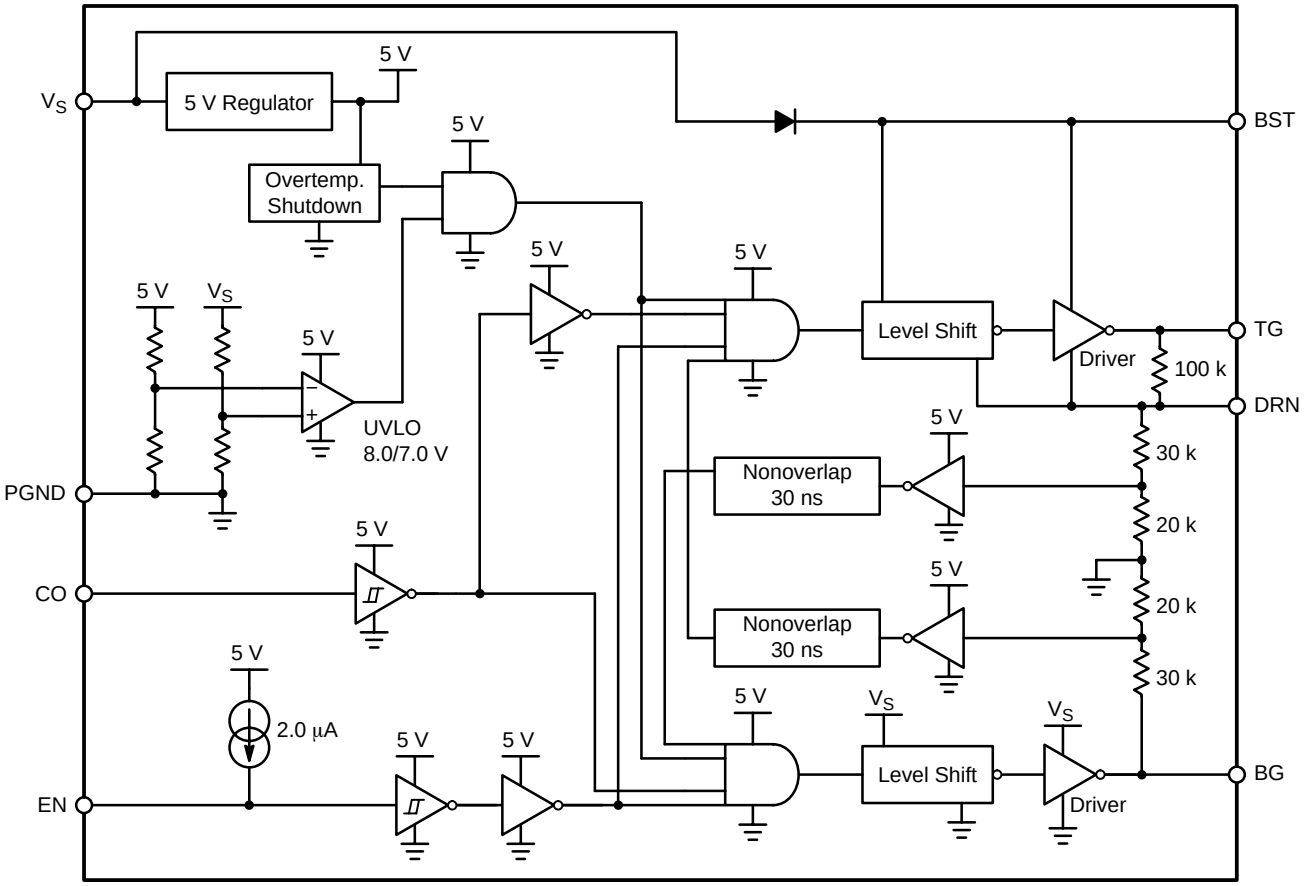

Figure 1. Block Diagram

PACKAGE PIN DESCRIPTION

Pin	Pin Symbol	Description
1	DRN	The switching node common to the high and low−side FETs. The high−side (TG) driver and supply (BST) are referenced to this pin.
2	TG	Driver output to the high−side MOSFET gate.
3	BST	Bootstrap supply voltage input. In conjunction with an internal diode to V_S, a 0.1 μF to 1.0 μF ceramic capacitor connected between BST and DRN develops supply voltage for the high−side driver (TG).
4	CO	Logic level control input produces complementary output states − no inversion at TG; inversion at BG.
5	EN	Logic level enable input forces TG and BG low when EN is low. When EN is high (5.0 V), normal operation ensues. No connect defaults EN high. Note: maximum high input is 5.0 V.
6	V_S	Power supply input. A 0.1 μF to 1.0 μF ceramic capacitor should be connected from this pin to PGND.
7	BG	Driver output to the low−side (synchronous rectifier) MOSFET gate.
8	PGND	Ground.

MAXIMUM RATINGS

Rating	Value	Unit
Operating Junction Temperature, T_J	Internally Limited	°C
Package Thermal Resistance: SOIC−8 Junction−to−Case, $R_{\theta JC}$ Junction−to−Ambient, $R_{\theta JA}$	 45 165	 °C/W °C/W
Package Thermal Resistance: SOIC−8 EP Junction−to−Ambient, $R_{\theta JA}$ (Note 1)	 50	 °C/W
Storage Temperature Range, T_S	−65 to 150	°C
Lead Temperature Soldering: Reflow: (SMD styles only) (Note 2)	230 peak	°C
JEDEC Moisture Sensitivity	1	−

Maximum ratings are those values beyond which device damage can occur. Maximum ratings applied to the device are individual stress limit values (not normal operating conditions) and are not valid simultaneously. If these limits are exceeded, device functional operation is not implied, damage may occur and reliability may be affected.

NOTE: This device is ESD sensitive. Use standard ESD precautions when handling.

1. Ratings applies when soldered to an appropriate thermal area on the PCB.
2. 60 seconds maximum above 183°C.

MAXIMUM RATINGS

Pin Symbol	Pin Name	V_{MAX}	V_{MIN}	I_{SOURCE}	I_{SINK}
V_S	Main Supply Voltage Input	15 V	−0.3 V	NA	2.0 A Peak (< 100 μs) 250 mA DC
BST	Bootstrap Supply Voltage Input	30 V wrt/PGND 15 V wrt/DRN	−0.3 V wrt/DRN	NA	2.0 A Peak (< 100 μs) 250 mA DC
DRN	Switching Node (Bootstrap Supply Return)	26 V	−1.0 V DC −5.0 V for 100 ns −6.0 V for 20 ns	2.0 A Peak (< 100 μs) 250 mA DC	NA
TG	High−Side Driver Output (Top Gate)	30 V wrt/PGND 15 V wrt/DRN	−0.3 V wrt/DRN	2.0 A Peak (< 100 μs) 250 mA DC	2.0 A Peak (< 100 μs) 250 mA DC
BG	Low−Side Driver Output (Bottom Gate)	15 V	−0.3 V	2.0 A Peak (< 100 μs) 250 mA DC	2.0 A Peak (< 100 μs) 250 mA DC
CO	TG and BG Control Input	5.5 V	−0.3 V	1.0 mA	1.0 mA
EN	Enable Input	5.5 V	−0.3 V	1.0 mA	1.0 mA
PGND	Ground	0 V	0 V	2.0 A Peak (< 100 μs) 250 mA DC	NA

NOTE: All voltages are with respect to PGND except where noted.

ELECTRICAL CHARACTERISTICS (Note 3) (0°C < T_J < 125°C; 9.2 V < V_S <13.2 V; 9.2 V < V_{BST} < 26 V; V_{EN} = Float; C_{LOAD} = 3.3 nF; unless otherwise noted.)

Parameter	Test Conditions	Min	Typ	Max	Unit
DC OPERATING SPECIFICATIONS POWER SUPPLY					
V_S Quiescent Current, Operating	V_{CO} = 0 V or 4.5 V; No output switching	−	1.0	2.0	mA
V_{BST} Quiescent Current, Operating	V_{CO} = 0 V or 4.5 V; No output switching	−	3.8	5.0	mA
UNDERVOLTAGE LOCKOUT					
Start Threshold	V_{CO} = 0 V	7.0	8.0	9.2	V
Stop Threshold	V_{CO} = 0 V	6.0	7.0	8.0	V
Hysteresis	V_{CO} = 0 V	0.70	1.00	1.60	V
CO INPUT CHARACTERISTICS					
High Threshold	−	2.0	−	−	V
Low Threshold	−	−	−	0.8	V
Input Bias Current	0 < V_{CO} < 5.0 V	−	0	1.0	μA
EN INPUT CHARACTERISTICS					
High Threshold	Both outputs respond to CO	2.0	−	−	V
Low Threshold	Both outputs are low independent of CO	−	−	0.8	V
Input Bias Current	0 < V_{EN} < 5.0 V	−7.0	−3.0	+2.0	μA
THERMAL SHUTDOWN					
Overtemperature Trip Point	Note 4	150	170	−	°C
Hysteresis	Note 4	−	20	−	°C
HIGH−SIDE DRIVER					
Peak Output Current	Note 4	−	2.0	−	A
Output Resistance (Sourcing)	Duty Cycle < 2.0%, Pulse Width < 100 μs, T_J = 125°C, V_{BST} − V_{DRN} = 12 V, V_{TG} = 10 V + V_{DRN}	−	1.0	−	Ω
Output Resistance (Sinking)	Duty Cycle < 2.0%, Pulse Width < 100 μs, T_J = 125°C, V_{BST} − V_{DRN} = 12 V, V_{TG} = 2.0 V + V_{DRN}	−	1.0	−	Ω
LOW−SIDE DRIVER					
Peak Output Current	Note 4	−	2.0	−	A
Output Resistance (Sourcing)	Duty Cycle < 2.0%, Pulse Width < 100 μs, T_J = 125°C, V_S = 12 V, V_{BG} = 10 V	−	1.1	−	Ω
Output Resistance (Sinking)	Duty Cycle < 2.0%, Pulse Width < 100 μs, T_J = 125°C, V_S = 12 V, V_{BG} = 2.0 V	−	1.0	−	Ω
CHARGE PUMP DIODE					
Forward Voltage Drop	I_D = 100 mA	−	1.1	1.4	V

3. All limits at temperature extremes are guaranteed by characterization using Standard Statistical Quality Control methods.
4. Guaranteed by design, not 100% tested in production.

ELECTRICAL CHARACTERISTICS (Note 5) (0°C < T_J < 125°C; 9.2 V < V_S <13.2 V; 9.2 V < V_{BST} < 26 V; V_{EN} = Float; C_{LOAD} = 3.3 nF; unless otherwise noted.)

Parameter	Symbol	Test Conditions	Min	Typ	Max	Unit
AC OPERATING SPECIFICATIONS HIGH−SIDE DRIVER						
Rise Time	tr_{TG}	$V_{BST} - V_{DRN}$ = 12 V, V_S = 12 V (Note 6)	−	15	25	ns
Fall Time	tf_{TG}	$V_{BST} - V_{DRN}$ = 12 V, V_S = 12 V (Note 6)	−	15	25	ns
Propagation Delay Time, TG Going High (Nonoverlap Time)	$tpdh_{TG}$	$V_{BST} - V_{DRN}$ = 12 V, V_S = 12 V (Note 6)	15	30	55	ns
Propagation Delay Time, TG Going Low	$tpdl_{TG}$	$V_{BST} - V_{DRN}$ = 12 V, V_S = 12 V (Note 6)	−	45	60	ns
LOW−SIDE DRIVER						
Rise Time	tr_{BG}	(Note 6)	−	10	20	ns
Fall Time	tf_{BG}	(Note 6)	−	10	20	ns
Propagation Delay Time, BG Going High (Nonoverlap Time)	$tpdh_{BG}$	(Note 6)	15	30	55	ns
Propagation Delay Time, BG Going Low	$tpdl_{BG}$	(Note 6)	−	35	55	ns

5. All limits at temperature extremes are guaranteed by characterization using Standard Statistical Quality Control methods.
6. AC specifications are guaranteed by characterization, not 100% tested in production.

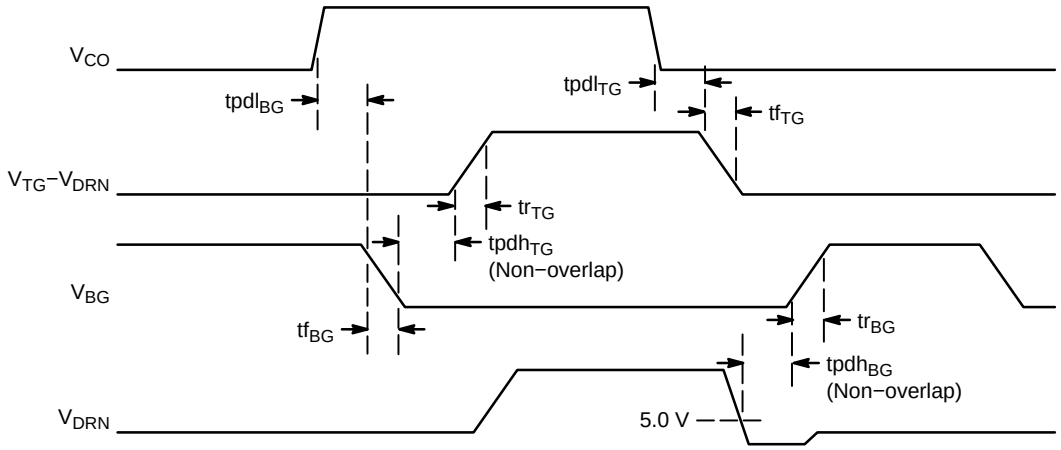

Figure 2. Timing Diagram

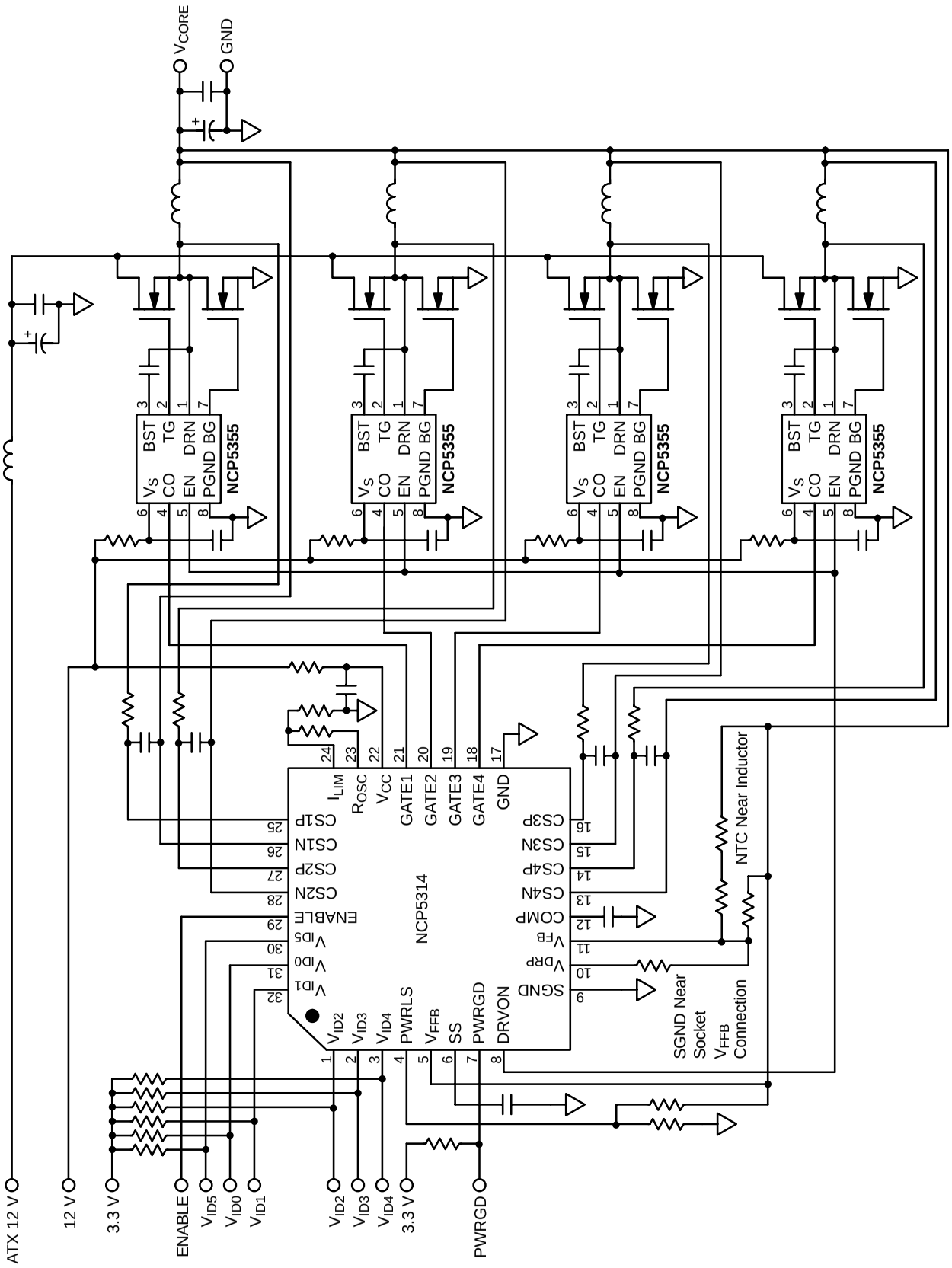

Figure 3. Application Diagram, 12 V to 1.4 V, 60 Amp, Four−Phase Converter

APPLICATIONS INFORMATION

Enable Pin

The Enable pin allows logic level On/Off control of the NCP5355. A Logic Level Low (< 0.8 V) disables the part by forcing both TG and BG low. Bringing both gates low *prevents* the output voltage_from ringing below ground at turn−off. A Logic Level High (> 2.0 V) enables the part by allowing CO to control TG and BG.

If the Enable function is not being used, the Enable pin should be left unconnected. This will Enable the part by default, as the Enable pin will be internally pulled high by a 2.0 μA current. The maximum high voltage level is 5.0 V. Voltages greater than this may damage the part.

Undervoltage Lockout

Gates TG and BG are both held low until V_s reaches the UVLO Start Threshold of 8.0 V during startup. V_s exceeding the UVLO threshold allows CO to take control of both gates. If V_s falls below the UVLO Stop Threshold of 7.0 V, both gates are then forced low until V_s again exceeds the Start Threshold.

Supply Capacitor Selection

A 1.0 μF ceramic capacitor (C_{VS} in Figure 4) should be located close to the V_s supply pins to provide peak current and to reduce noise. A small 1.0 Ω to 5.0 Ω resistor (R_{VS} in Figure 4) may also be added in series with C_{VS} to provide additional filtering in noisy environments.

Bootstrap Capacitor Selection

The size of the Top MOSFET bootstrap capacitor (C_{BST} in Figure 4) is determined from the following equation:

$$C_{BST} \geq \frac{Q_{TtopFETs}}{\Delta V_{BST}}$$

where

$Q_{TtopFETs}$ is the sum of the Top MOSFETs total gate charge,

ΔV_{BST} is the maximum change in voltage across the bootstrap capacitor and is typically designed for a drop of less than a 1.0 V.

For example, a circuit using one Top MOSFET with a typical $Q_{TtopFETs}$ of 60 nC (at 12 V Vgs) and 1.0 V of droop would give a minimum value for C_{BST} of 60 nF.

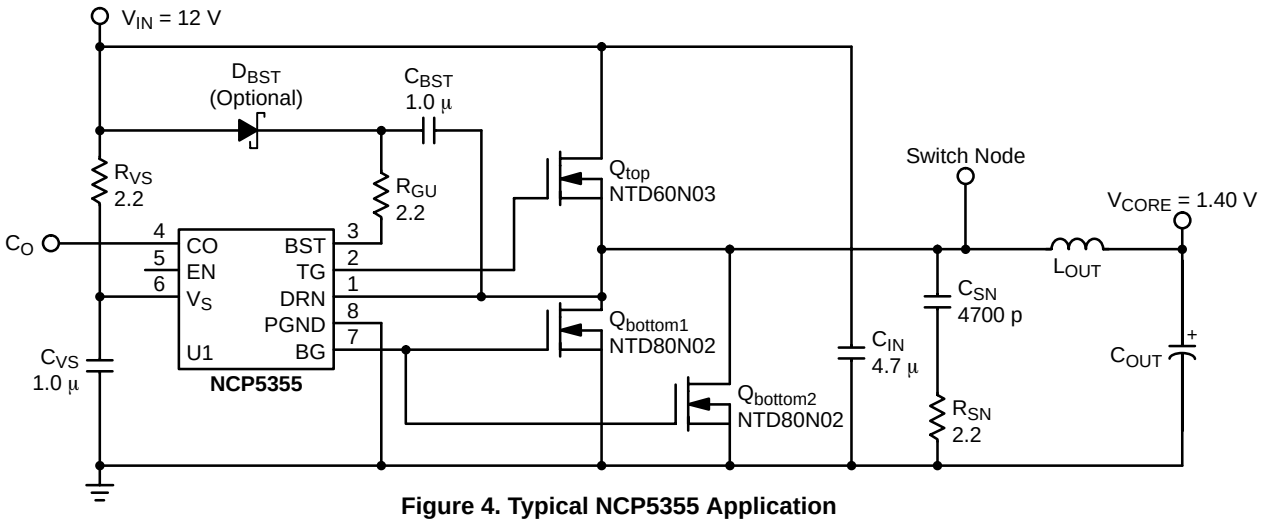

Figure 4. Typical NCP5355 Application

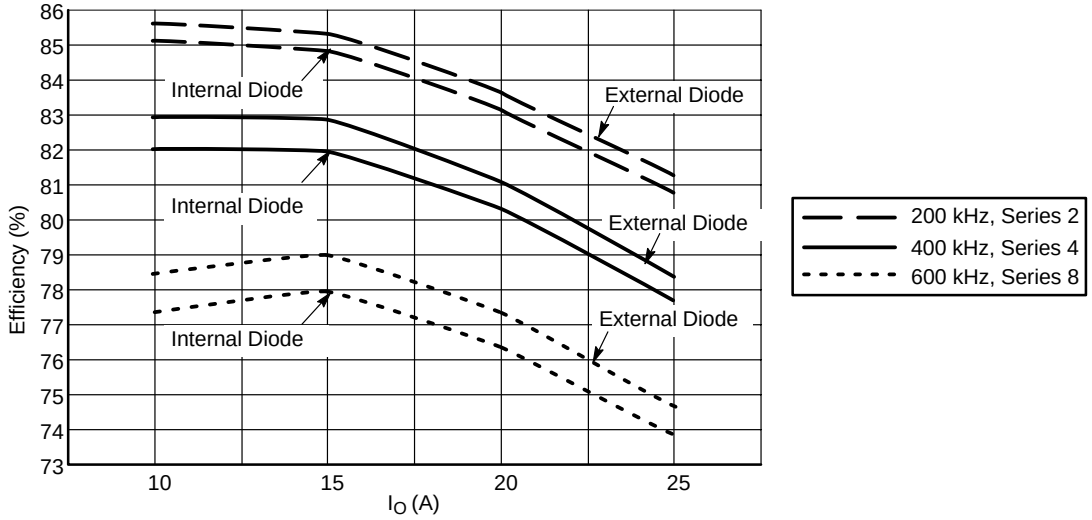

Figure 5. Efficiency With and Without an Added External Bootstrap Diode, See Figure 4 for Test Circuit

Internal or External Bootstrap Diode

For convenience, a bootstrap diode is internally provided by the NCP5355. This internal diode reduces system cost and parts count.

However, this diode will have higher losses than a standard small signal switching or Schottky diode. By using an external Schottky diode (D_{BST} in Figure 4) a small improvement in efficiency can be achieved as illustrated by the graph in Figure 5.

While the difference in efficiency is relatively small, this difference represents heat loss in the driver and on average driver temperature may be reduced by about 10°C if using an external diode. If an external diode is used, it should be a Schottky or switching diode. (For example: ON Semiconductor Part Number BAT54HT1 or BAS16HT1.)

Adaptive Nonoverlap

The NCP5355 includes adaptive nonoverlap protection to prevent top and bottom MOSFET cross conduction.

When CO goes low signaling TG to turn off the top MOSFET, BG does not go high until the switch node (DRN pin) has fallen below 5.0 V and a fixed amount of delay ($tpdh_{BG}$) has elapsed. This ensures that the top MOSFET is off before the bottom MOSFET is turned on.

When CO goes high signaling BG turn off the Bottom MOSFET, TG does not go high until BG has fallen below a threshold of 5.0 V and a fixed amount of time has elapsed ($tpdh_{TG}$).

However, caution must be observed if too much gate resistance and inductance is introduced into the path between the IC and the gate of the low MOSFET. A condition can occur where the NCP5355 will sense that BG has fallen below 5.0 V while the gate end of the MOSFET still has not fallen low enough to turn off the device. This parasitic gate impedance between the driver and MOSFET can reduce the nonoverlap time, and result in shoot−through currents.

Power Dissipation

Driver power dissipation may be approximated by the following equation:

$$P_{loss} = f_{SW} \cdot V_S \cdot (1.5 \cdot Q_{TtopFETs} + Q_{TbottomFETs}) + V_S \cdot I_S$$

where

f_{SW}	is the switching frequency,
V_s	is the supply voltage,
$Q_{TtopFETs}$	is the sum of the Top MOSFETs total gate charge,
$Q_{TbottomFETs}$	is the sum of the Bottom MOSFETs total gate charge
I_s	is the supply quiescent current, typically around 5.0 mA

The 1.5 factor is a result of the internal bootstrap diode whose loss is equivalent to the charge lost in turning on the Top MOSFET. If an external diode is used to improve efficiency, the 1.5 factor is replaced with 1.0 as this loss will now occur outside the package.

Safe design practice requires limiting the SO8 device power dissipation to around 700 mW. Higher frequency designs may require limiting the supply voltage (V_s) to less than 12 V to maintain this limit.

Switch Node Overshoot and Ringing

Due to the high current sourcing capability of the NCP5355, increased overshoot and ringing may be noticed at the switch node (DRN pin). This can be reduced in several ways.

One is by adding a low ESR 1.0 μF−10 μF ceramic capacitor (C_{IN} in Figure 4) from V_{IN} to ground near each Qtop. This capacitor should be located in such a manner as to reduce the loop area of the switch node as shown in Figure 6. A smaller loop area from C_{IN}+ to Qtop to Qbottom and back to C_{IN}− will reduce the amount of ringing by reducing the PCB inductance. If further reduction in overshoot and ringing is desired, a Top MOSFET gate drive resistor may be added (R_{GU} in Figure 4) to slow the turn−on of the Top MOSFET without increasing the turn−off time.

Layout Guidelines

When designing any switching regulator, the layout is very important for proper operation. Gate drivers experience high di/dt during switching, and the inductance of the gate drive traces need to be minimized. Gate drive traces should be kept as short and wide (25 to 30 mils) as practical, and should have a return path directly below the gate trace. The use of a ground plane is a desirable way to return ground signals. Component location is very important. The boost and the V_s capacitor are the most critical, and need to be placed as close as possible to the driver IC pins (C_{VS} and C_{BST} in Figure 4) as shown in Figure 6. Higher frequency designs will magnify any layout problems, and added attention to these guidelines should be observed in designs above 250 kHz.

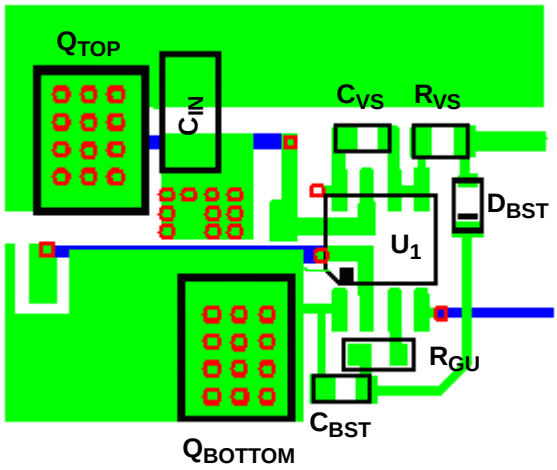

Figure 6. Typical NCP5355 PCB Layout

MECHANICAL CASE OUTLINE
PACKAGE DIMENSIONS



SCALE 1:1

SOIC−8 NB
CASE 751−07
ISSUE AK

DATE 16 FEB 2011

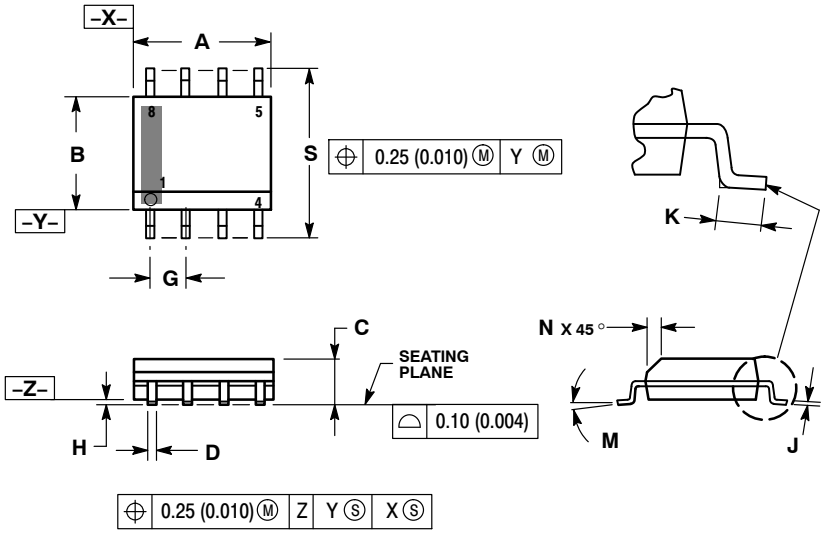

NOTES:
1. DIMENSIONING AND TOLERANCING PER ANSI Y14.5M, 1982.
2. CONTROLLING DIMENSION: MILLIMETER.
3. DIMENSION A AND B DO NOT INCLUDE MOLD PROTRUSION.
4. MAXIMUM MOLD PROTRUSION 0.15 (0.006) PER SIDE.
5. DIMENSION D DOES NOT INCLUDE DAMBAR PROTRUSION. ALLOWABLE DAMBAR PROTRUSION SHALL BE 0.127 (0.005) TOTAL IN EXCESS OF THE D DIMENSION AT MAXIMUM MATERIAL CONDITION.
6. 751−01 THRU 751−06 ARE OBSOLETE. NEW STANDARD IS 751−07.

	MILLIMETERS		INCHES	
DIM	MIN	MAX	MIN	MAX
A	4.80	5.00	0.189	0.197
B	3.80	4.00	0.150	0.157
C	1.35	1.75	0.053	0.069
D	0.33	0.51	0.013	0.020
G	1.27 BSC		0.050 BSC	
H	0.10	0.25	0.004	0.010
J	0.19	0.25	0.007	0.010
K	0.40	1.27	0.016	0.050
M	0 °	8 °	0 °	8 °
N	0.25	0.50	0.010	0.020
S	5.80	6.20	0.228	0.244

SOLDERING FOOTPRINT*

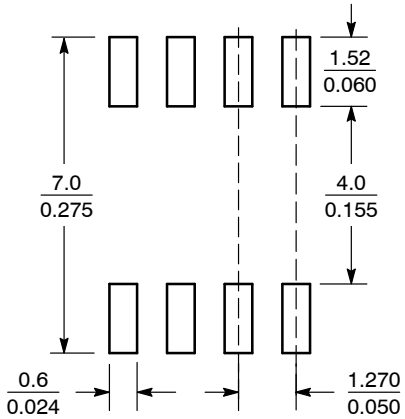

SCALE 6:1 (mm / inches)

*For additional information on our Pb−Free strategy and soldering details, please download the ON Semiconductor Soldering and Mounting Techniques Reference Manual, SOLDERRM/D.

GENERIC MARKING DIAGRAM*

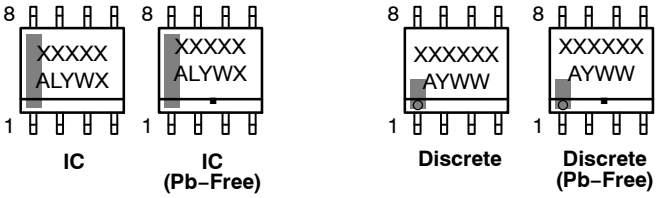

IC | IC (Pb−Free) | Discrete | Discrete (Pb−Free)

XXXXX = Specific Device Code
A = Assembly Location
L = Wafer Lot
Y = Year
W = Work Week
▪ = Pb−Free Package

XXXXXX = Specific Device Code
A = Assembly Location
Y = Year
WW = Work Week
▪ = Pb−Free Package

*This information is generic. Please refer to device data sheet for actual part marking. Pb−Free indicator, "G" or microdot "▪", may or may not be present. Some products may not follow the Generic Marking.

STYLES ON PAGE 2

DOCUMENT NUMBER:	**98ASB42564B**	Electronic versions are uncontrolled except when accessed directly from the Document Repository. Printed versions are uncontrolled except when stamped "CONTROLLED COPY" in red.
DESCRIPTION:	**SOIC−8 NB**	**PAGE 1 OF 2**

onsemi and onsemi are trademarks of Semiconductor Components Industries, LLC dba **onsemi** or its subsidiaries in the United States and/or other countries. **onsemi** reserves the right to make changes without further notice to any products herein. **onsemi** makes no warranty, representation or guarantee regarding the suitability of its products for any particular purpose, nor does **onsemi** assume any liability arising out of the application or use of any product or circuit, and specifically disclaims any and all liability, including without limitation special, consequential or incidental damages. **onsemi** does not convey any license under its patent rights nor the rights of others.

© Semiconductor Components Industries, LLC, 2019

SOIC−8 NB
CASE 751−07
ISSUE AK

DATE 16 FEB 2011

STYLE 1:
PIN 1. EMITTER
2. COLLECTOR
3. COLLECTOR
4. EMITTER
5. EMITTER
6. BASE
7. BASE
8. EMITTER

STYLE 2:
PIN 1. COLLECTOR, DIE, #1
2. COLLECTOR, #1
3. COLLECTOR, #2
4. COLLECTOR, #2
5. BASE, #2
6. EMITTER, #2
7. BASE, #1
8. EMITTER, #1

STYLE 3:
PIN 1. DRAIN, DIE #1
2. DRAIN, #1
3. DRAIN, #2
4. DRAIN, #2
5. GATE, #2
6. SOURCE, #2
7. GATE, #1
8. SOURCE, #1

STYLE 4:
PIN 1. ANODE
2. ANODE
3. ANODE
4. ANODE
5. ANODE
6. ANODE
7. ANODE
8. COMMON CATHODE

STYLE 5:
PIN 1. DRAIN
2. DRAIN
3. DRAIN
4. DRAIN
5. GATE
6. GATE
7. SOURCE
8. SOURCE

STYLE 6:
PIN 1. SOURCE
2. DRAIN
3. DRAIN
4. SOURCE
5. SOURCE
6. GATE
7. GATE
8. SOURCE

STYLE 7:
PIN 1. INPUT
2. EXTERNAL BYPASS
3. THIRD STAGE SOURCE
4. GROUND
5. DRAIN
6. GATE 3
7. SECOND STAGE Vd
8. FIRST STAGE Vd

STYLE 8:
PIN 1. COLLECTOR, DIE #1
2. BASE, #1
3. BASE, #2
4. COLLECTOR, #2
5. COLLECTOR, #2
6. EMITTER, #2
7. EMITTER, #1
8. COLLECTOR, #1

STYLE 9:
PIN 1. EMITTER, COMMON
2. COLLECTOR, DIE #1
3. COLLECTOR, DIE #2
4. EMITTER, COMMON
5. EMITTER, COMMON
6. BASE, DIE #2
7. BASE, DIE #1
8. EMITTER, COMMON

STYLE 10:
PIN 1. GROUND
2. BIAS 1
3. OUTPUT
4. GROUND
5. GROUND
6. BIAS 2
7. INPUT
8. GROUND

STYLE 11:
PIN 1. SOURCE 1
2. GATE 1
3. SOURCE 2
4. GATE 2
5. DRAIN 2
6. DRAIN 2
7. DRAIN 1
8. DRAIN 1

STYLE 12:
PIN 1. SOURCE
2. SOURCE
3. SOURCE
4. GATE
5. DRAIN
6. DRAIN
7. DRAIN
8. DRAIN

STYLE 13:
PIN 1. N.C.
2. SOURCE
3. SOURCE
4. GATE
5. DRAIN
6. DRAIN
7. DRAIN
8. DRAIN

STYLE 14:
PIN 1. N−SOURCE
2. N−GATE
3. P−SOURCE
4. P−GATE
5. P−DRAIN
6. P−DRAIN
7. N−DRAIN
8. N−DRAIN

STYLE 15:
PIN 1. ANODE 1
2. ANODE 1
3. ANODE 1
4. ANODE 1
5. CATHODE, COMMON
6. CATHODE, COMMON
7. CATHODE, COMMON
8. CATHODE, COMMON

STYLE 16:
PIN 1. EMITTER, DIE #1
2. BASE, DIE #1
3. EMITTER, DIE #2
4. BASE, DIE #2
5. COLLECTOR, DIE #2
6. COLLECTOR, DIE #2
7. COLLECTOR, DIE #1
8. COLLECTOR, DIE #1

STYLE 17:
PIN 1. VCC
2. V2OUT
3. V1OUT
4. TXE
5. RXE
6. VEE
7. GND
8. ACC

STYLE 18:
PIN 1. ANODE
2. ANODE
3. SOURCE
4. GATE
5. DRAIN
6. DRAIN
7. CATHODE
8. CATHODE

STYLE 19:
PIN 1. SOURCE 1
2. GATE 1
3. SOURCE 2
4. GATE 2
5. DRAIN 2
6. MIRROR 2
7. DRAIN 1
8. MIRROR 1

STYLE 20:
PIN 1. SOURCE (N)
2. GATE (N)
3. SOURCE (P)
4. GATE (P)
5. DRAIN
6. DRAIN
7. DRAIN
8. DRAIN

STYLE 21:
PIN 1. CATHODE 1
2. CATHODE 2
3. CATHODE 3
4. CATHODE 4
5. CATHODE 5
6. COMMON ANODE
7. COMMON ANODE
8. CATHODE 6

STYLE 22:
PIN 1. I/O LINE 1
2. COMMON CATHODE/VCC
3. COMMON CATHODE/VCC
4. I/O LINE 3
5. COMMON ANODE/GND
6. I/O LINE 4
7. I/O LINE 5
8. COMMON ANODE/GND

STYLE 23:
PIN 1. LINE 1 IN
2. COMMON ANODE/GND
3. COMMON ANODE/GND
4. LINE 2 IN
5. LINE 2 OUT
6. COMMON ANODE/GND
7. COMMON ANODE/GND
8. LINE 1 OUT

STYLE 24:
PIN 1. BASE
2. EMITTER
3. COLLECTOR/ANODE
4. COLLECTOR/ANODE
5. CATHODE
6. CATHODE
7. COLLECTOR/ANODE
8. COLLECTOR/ANODE

STYLE 25:
PIN 1. VIN
2. N/C
3. REXT
4. GND
5. IOUT
6. IOUT
7. IOUT
8. IOUT

STYLE 26:
PIN 1. GND
2. dv/dt
3. ENABLE
4. ILIMIT
5. SOURCE
6. SOURCE
7. SOURCE
8. VCC

STYLE 27:
PIN 1. ILIMIT
2. OVLO
3. UVLO
4. INPUT+
5. SOURCE
6. SOURCE
7. SOURCE
8. DRAIN

STYLE 28:
PIN 1. SW_TO_GND
2. DASIC_OFF
3. DASIC_SW_DET
4. GND
5. V_MON
6. VBULK
7. VBULK
8. VIN

STYLE 29:
PIN 1. BASE, DIE #1
2. EMITTER, #1
3. BASE, #2
4. EMITTER, #2
5. COLLECTOR, #2
6. COLLECTOR, #2
7. COLLECTOR, #1
8. COLLECTOR, #1

STYLE 30:
PIN 1. DRAIN 1
2. DRAIN 1
3. GATE 2
4. SOURCE 2
5. SOURCE 1/DRAIN 2
6. SOURCE 1/DRAIN 2
7. SOURCE 1/DRAIN 2
8. GATE 1

DOCUMENT NUMBER:	**98ASB42564B**	Electronic versions are uncontrolled except when accessed directly from the Document Repository. Printed versions are uncontrolled except when stamped "CONTROLLED COPY" in red.	
DESCRIPTION:	**SOIC−8 NB**		**PAGE 2 OF 2**

onsemi and ONSEMI. are trademarks of Semiconductor Components Industries, LLC dba **onsemi** or its subsidiaries in the United States and/or other countries. **onsemi** reserves the right to make changes without further notice to any products herein. **onsemi** makes no warranty, representation or guarantee regarding the suitability of its products for any particular purpose, nor does **onsemi** assume any liability arising out of the application or use of any product or circuit, and specifically disclaims any and all liability, including without limitation special, consequential or incidental damages. **onsemi** does not convey any license under its patent rights nor the rights of others.

© Semiconductor Components Industries, LLC, 2019

MECHANICAL CASE OUTLINE
PACKAGE DIMENSIONS



SCALE 1:1

SOIC−8 EP
CASE 751AC
ISSUE E

DATE 05 OCT 2022

NOTES:

1. DIMENSIONING AND TOLERANCING PER ASME Y14.5M, 1994.
2. CONTROLLING DIMENSION: MILLIMETERS
3. DIMENSION b DOES NOT INCLUDE DAMBAR PROTRUSION. ALLOWABLE PROTRUSION SHALL BE 0.004 IN EXCESS OF MAXIMUM MATERIAL CONDITION.
4. DIMENSION D DOES NOT INCLUDE MOLD FLASH, PROTRUSIONS, OR GATE BURRS. MOLD FLASH, PROTRUSIONS, OR GATE BURRS SHALL NOT EXCEED 0.006 PER SIDE. DIMENSION E1 DOES NOT INCLUDE INTERLEAD FLASH OR PROTRUSION. INTERLEAD FLASH OR PROTRUSION SHALL NOT EXCEED 0.010 mm PER SIDE.
5. THE PACKAGE TOP MAY BE SMALLER THAN THE PACKAGE BOTTOM. DIMENSIONS D AND E1 ARE DETERMINED AT THE OUTERMOST EXTREMES OF THE PLASTIC BODY AT DATUM H.
6. DATUMS A AND B ARE TO BE DETERMINED AT DATUM H.
7. DIMENSIONS b AND c APPLY TO THE FLAT SECTION OF THE LEAD BETWEEN 0.10 TO 0.25 FROM THE LEAD TIP.
8. A1 IS DEFINED AS THE VERTICAL DISTANCE FROM THE SEATING PLANE TO THE LOWEST POINT ON THE PACKAGE BODY.

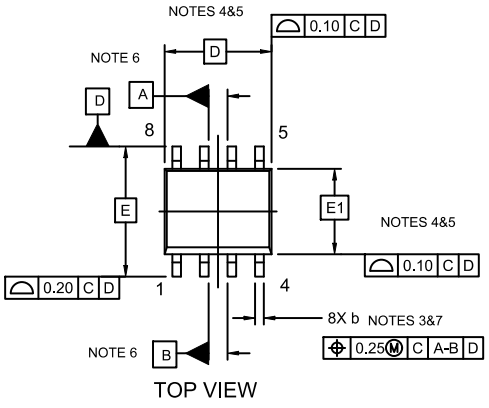

TOP VIEW

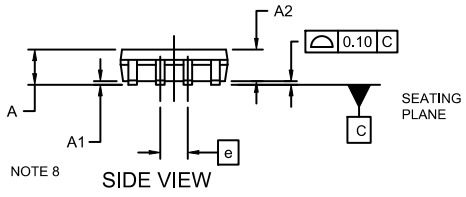

SIDE VIEW

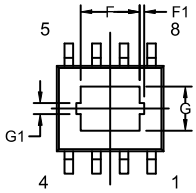

BOTTOM VIEW

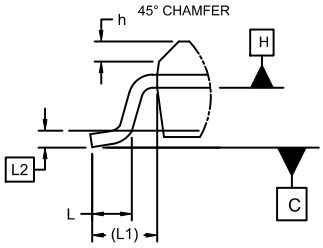

DETAIL A

DETAIL A

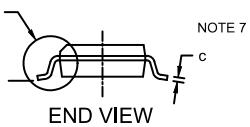

END VIEW

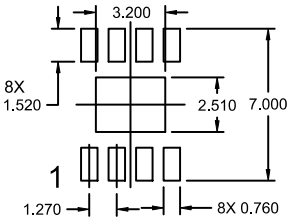

RECOMMENDED
MOUNTING FOOTPRINT*

DIM	MILLIMETERS		
	MIN.	NOM..	MAX.
A	1.35	1.55	1.75
A1	---	0.05	0.10
A2	1.35	1.50	1.65
b	0.31	0.41	0.51
c	0.17	0.21	0.23
D	4.90 BSC		
E	6.00 BSC		
E1	3.90 BSC		
e	1.27 BSC		
F	2.24	2.72	3.20
F1		0.20 REF	
G	1.55	2.03	2.51
G1		0.46 REF	
h	0.25	0.38	0.50
L	0.40	0.84	1.27
L1	1.04 REF		
L2	0.25 REF		
Ø	0°	4°	8°

*For additional information on our Pb−Free strategy and soldering details, please download the ON Semiconductor Soldering and Mounting Techniques Reference Manual, SOLDERRM/D."

GENERIC MARKING DIAGRAM*

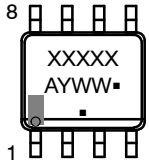

XXXXXX = Specific Device Code
A = Assembly Location
Y = Year
WW = Work Week
▪ = Pb−Free Package

*This information is generic. Please refer to device data sheet for actual part marking. Pb−Free indicator, "G" or microdot " ▪", may or may not be present and may be in either location. Some products may not follow the Generic Marking.

DOCUMENT NUMBER:	98AON14029D	Electronic versions are uncontrolled except when accessed directly from the Document Repository. Printed versions are uncontrolled except when stamped "CONTROLLED COPY" in red.
DESCRIPTION:	SOIC−8 EP	PAGE 1 OF 1

onsemi and onsemi are trademarks of Semiconductor Components Industries, LLC dba **onsemi** or its subsidiaries in the United States and/or other countries. **onsemi** reserves the right to make changes without further notice to any products herein. **onsemi** makes no warranty, representation or guarantee regarding the suitability of its products for any particular purpose, nor does **onsemi** assume any liability arising out of the application or use of any product or circuit, and specifically disclaims any and all liability, including without limitation special, consequential or incidental damages. **onsemi** does not convey any license under its patent rights nor the rights of others.

onsemi, , and other names, marks, and brands are registered and/or common law trademarks of Semiconductor Components Industries, LLC dba "**onsemi**" or its affiliates and/or subsidiaries in the United States and/or other countries. **onsemi** owns the rights to a number of patents, trademarks, copyrights, trade secrets, and other intellectual property. A listing of **onsemi**'s product/patent coverage may be accessed at www.onsemi.com/site/pdf/Patent−Marking.pdf. **onsemi** reserves the right to make changes at any time to any products or information herein, without notice. The information herein is provided "as−is" and **onsemi** makes no warranty, representation or guarantee regarding the accuracy of the information, product features, availability, functionality, or suitability of its products for any particular purpose, nor does **onsemi** assume any liability arising out of the application or use of any product or circuit, and specifically disclaims any and all liability, including without limitation special, consequential or incidental damages. Buyer is responsible for its products and applications using **onsemi** products, including compliance with all laws, regulations and safety requirements or standards, regardless of any support or applications information provided by **onsemi**. "Typical" parameters which may be provided in **onsemi** data sheets and/or specifications can and do vary in different applications and actual performance may vary over time. All operating parameters, including "Typicals" must be validated for each customer application by customer's technical experts. **onsemi** does not convey any license under any of its intellectual property rights nor the rights of others. **onsemi** products are not designed, intended, or authorized for use as a critical component in life support systems or any FDA Class 3 medical devices or medical devices with a same or similar classification in a foreign jurisdiction or any devices intended for implantation in the human body. Should Buyer purchase or use **onsemi** products for any such unintended or unauthorized application, Buyer shall indemnify and hold **onsemi** and its officers, employees, subsidiaries, affiliates, and distributors harmless against all claims, costs, damages, and expenses, and reasonable attorney fees arising out of, directly or indirectly, any claim of personal injury or death associated with such unintended or unauthorized use, even if such claim alleges that **onsemi** was negligent regarding the design or manufacture of the part. **onsemi** is an Equal Opportunity/Affirmative Action Employer. This literature is subject to all applicable copyright laws and is not for resale in any manner.

ADDITIONAL INFORMATION

TECHNICAL PUBLICATIONS:
Technical Library: www.onsemi.com/design/resources/technical−documentation
onsemi Website: www.onsemi.com

ONLINE SUPPORT: www.onsemi.com/support
For additional information, please contact your local Sales Representative at www.onsemi.com/support/sales