NCV1009

2.5 Volt Reference

The NCV1009 is a precision trimmed 2.5 V ±5.0 mV shunt regulator diode. The low dynamic impedance and wide operating current range enhances its versatility. The tight reference tolerance is achieved by on−chip trimming which minimizes voltage tolerance and temperature drift.

A third terminal allows the reference voltage to be adjusted ±5.0% to calibrate out system errors. In many applications, the NCV1009Z can be used as a pin−to−pin replacement of the LT1009CZ and the LM136Z−2.5 with the external trim network eliminated.

Features

- 0.2% Initial Tolerance Max.
- Guaranteed Temperature Stability
- Maximum 0.6 Ω Dynamic Impedance
- Wide Operating Current Range
- Directly Interchangeable with LT1009 and LM136 for Improved Performance
- No Adjustments Needed for Minimum Temperature Coefficient
- Meets Mil Std 883C ESD Requirements
- Extended Operating Temperature Range for Use in Automotive Applications
- NCV Prefix, for Automotive and Other Applications Requiring Site and Change Control
- Pb−Free Packages are Available

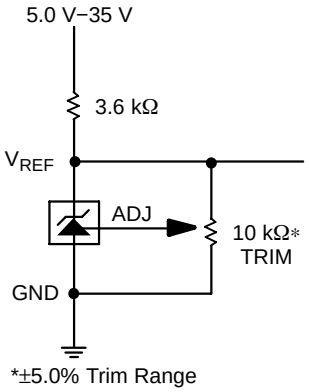

If the external trim resistor is not used, the “ADJ. PIN” should be left floating. The 10k trim potentiometer does not effect the temperature coefficient of the device.

Figure 1. Application Diagram

ON Semiconductor®

http://onsemi.com

MARKING DIAGRAMS

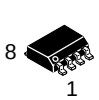

SOIC−8
D SUFFIX
CASE 751

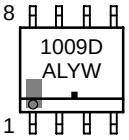

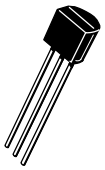

TO−92
Z SUFFIX
CASE 29

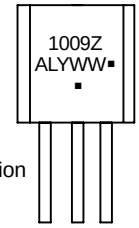

A = Assembly Location
L = Wafer Lot
Y = Year
WW, W = Work Week
▪ = Pb−Free Package

(Note: Microdot may be in either location)

PIN CONNECTIONS

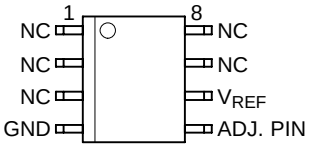

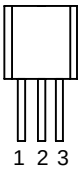

Pin 1. ADJ. PIN
2. V_{REF}
3. GND

ORDERING INFORMATION

Device	Package	Shipping
NCV1009D	SOIC−8	95 Units/Rail
NCV1009DR2	SOIC−8	2500 Tape & Reel
NCV1009DR2G	SOIC−8 (Pb−Free)	2500 Tape & Reel
NCV1009Z	TO−92	2000 Units/Rail
NCV1009ZG	TO−92 (Pb−Free)	2000 Tape & Reel

†For information on tape and reel specifications, including part orientation and tape sizes, please refer to our Tape and Reel Packaging Specification Brochure, BRD8011/D.

© Semiconductor Components Industries, LLC, 2006

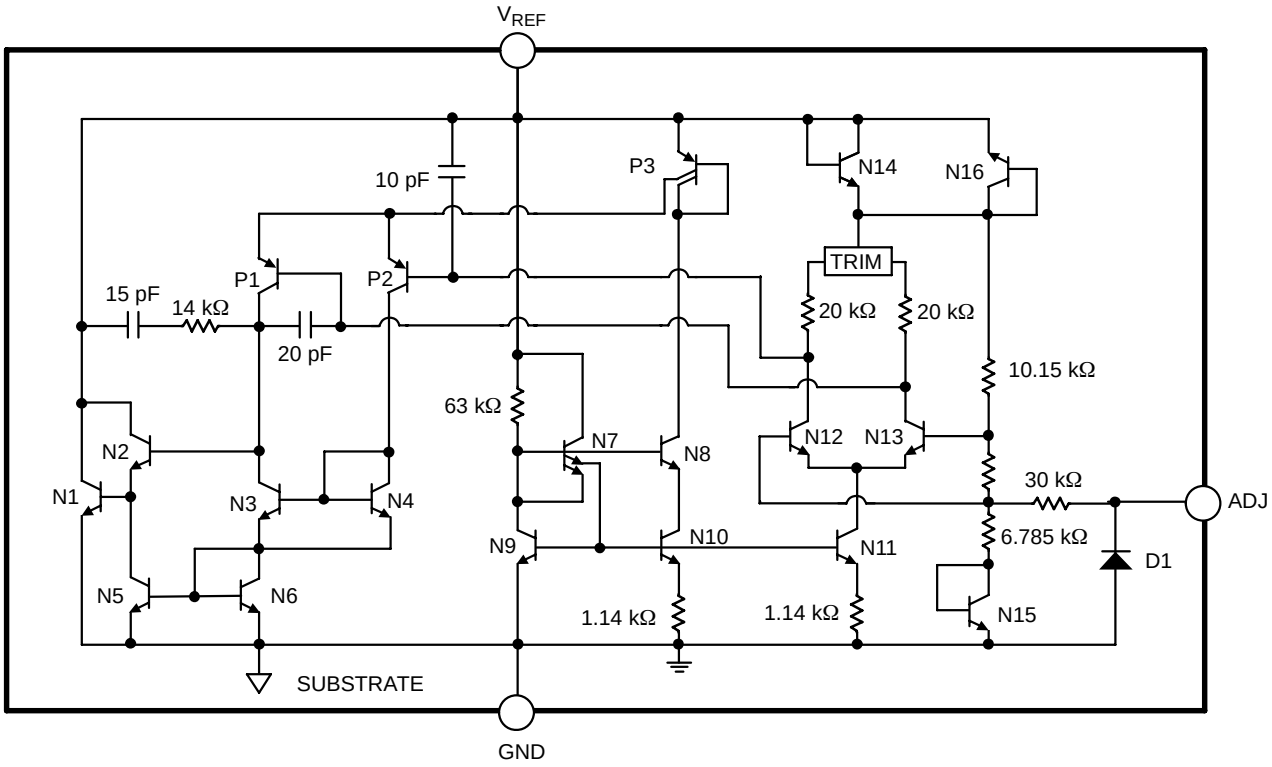

Figure 2. Block Diagram

MAXIMUM RATINGS*

Rating		Value	Unit
Reverse Current		20	mA
Forward		10	mA
Package Thermal Resistance, SOIC−8: Junction−to−Case, $R_{\theta JC}$ Junction−to−Ambient, $R_{\theta JA}$ Package Thermal Resistance, TO−92: Junction−to−Case, $R_{\theta JC}$ Junction−to−Ambient, $R_{\theta JA}$		 45 165 – 170	 °C/W °C/W °C/W °C/W
Operating Temperature Range		−40 to +125	°C
Storage Temperature Range		−65 to +150	°C
Lead Temperature Soldering:	Wave Solder (through hole styles only) (Note 1) Reflow: (SMD styles only) (Notes 2, 3)	260 peak 240 peak	°C °C

Maximum ratings are those values beyond which device damage can occur. Maximum ratings applied to the device are individual stress limit values (not normal operating conditions) and are not valid simultaneously. If these limits are exceeded, device functional operation is not implied, damage may occur and reliability may be affected.
*The maximum package power dissipation must be observed.

1. 10 second maximum
2. 60 second maximum above 183°C.
3. −5°C / +0°C allowable conditions.

ELECTRICAL CHARACTERISTICS (T_A = 25°C unless otherwise specified.)

Characteristic	Test Conditions	Min	Typ	Max	Unit
Reverse Breakdown Voltage	I_R = 1.0 mA	2.492	2.500	2.508	V
Reverse Breakdown Voltage	−40°C ≤ T_A ≤ 125°C	2.480	2.500	2.508	V
Reverse Breakdown Voltage Change with Current	400 μA ≤ I_R ≤ 10 mA (Note 4)	– –	2.6 3.0	5.0 6.0	mV mV
Reverse Dynamic Impedance	I_R = 1.0 mA (Note 4)	– –	0.2 0.4	1.0 1.4	Ω Ω
Temperature Stability Average Temperature Coefficient	0°C ≤ T_A ≤ 70°C, (Note 5) 0°C ≤ T_A ≤ 70°C, (Note 5)	– –	1.8 15	– –	mV ppm/°C
Long Term Stabilty	T_A = 25°C ±0.1 C, I_R = 1.0 mA	–	20	–	ppm/kHr

4. Denotes the specifications which apply over full operating temperature range.
5. Average temperature coefficient is defined as the total voltage change divided by the specified temperature range.

TYPICAL PERFORMANCE CHARACTERISTICS

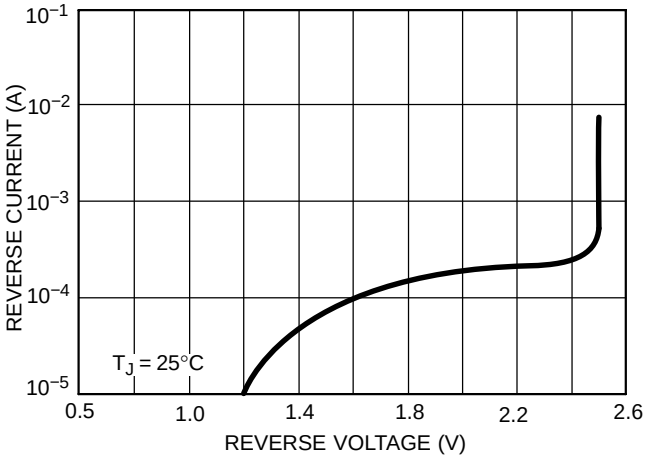

Figure 3. Reverse Current vs. Reverse Voltage

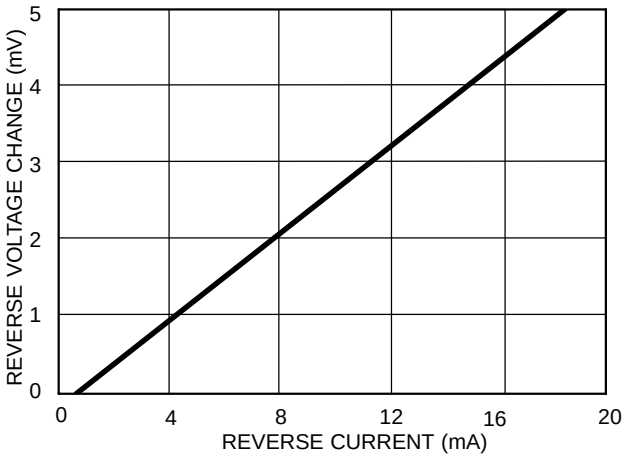

Figure 4. Change in Reverse Voltage vs. Reverse Current

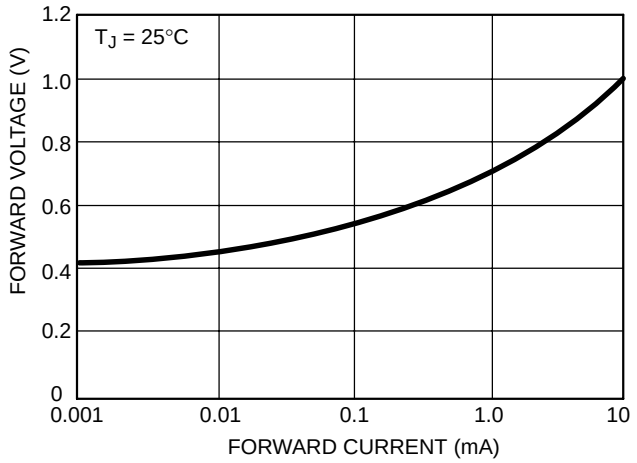

Figure 5. Forward Voltage vs. Forward Current

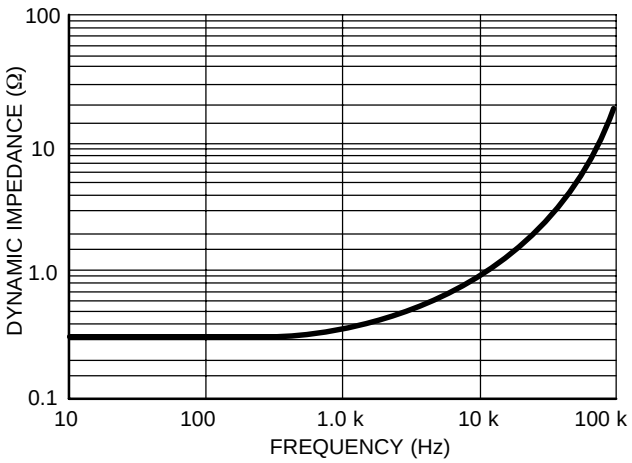

Figure 6. Dynamic Impedance vs. Frequency

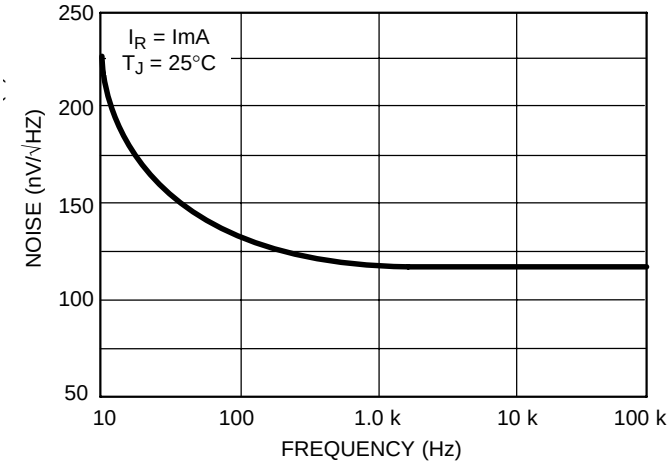

Figure 7. Zener Noise Voltage vs. Frequency

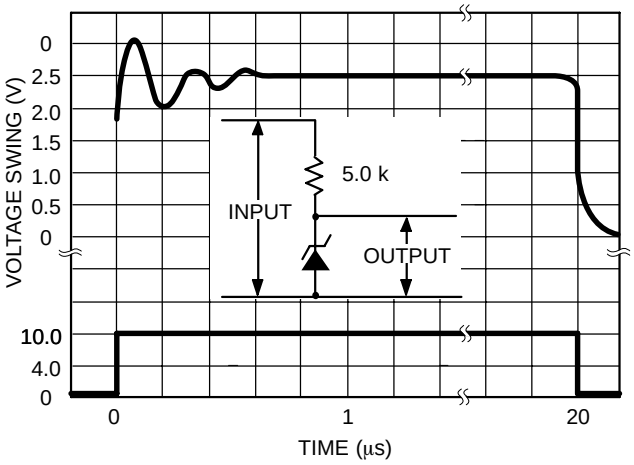

Figure 8. Response Time

MECHANICAL CASE OUTLINE
PACKAGE DIMENSIONS

ON Semiconductor®

TO–92 (TO–226)
CASE 29–11
ISSUE AM

DATE 09 MAR 2007

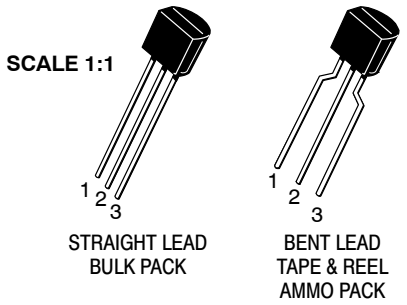

STRAIGHT LEAD
BULK PACK

BENT LEAD
TAPE & REEL
AMMO PACK

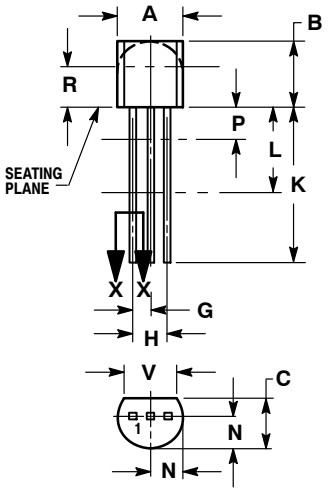

STRAIGHT LEAD
BULK PACK

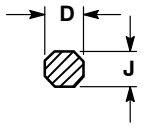

SECTION X–X

NOTES:
1. DIMENSIONING AND TOLERANCING PER ANSI Y14.5M, 1982.
2. CONTROLLING DIMENSION: INCH.
3. CONTOUR OF PACKAGE BEYOND DIMENSION R IS UNCONTROLLED.
4. LEAD DIMENSION IS UNCONTROLLED IN P AND BEYOND DIMENSION K MINIMUM.

	INCHES		MILLIMETERS	
DIM	MIN	MAX	MIN	MAX
A	0.175	0.205	4.45	5.20
B	0.170	0.210	4.32	5.33
C	0.125	0.165	3.18	4.19
D	0.016	0.021	0.407	0.533
G	0.045	0.055	1.15	1.39
H	0.095	0.105	2.42	2.66
J	0.015	0.020	0.39	0.50
K	0.500	---	12.70	---
L	0.250	---	6.35	---
N	0.080	0.105	2.04	2.66
P	---	0.100	---	2.54
R	0.115	---	2.93	---
V	0.135	---	3.43	---

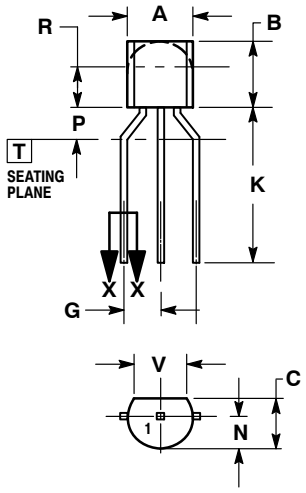

BENT LEAD
TAPE & REEL
AMMO PACK

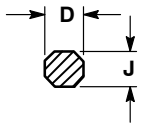

SECTION X–X

NOTES:
1. DIMENSIONING AND TOLERANCING PER ASME Y14.5M, 1994.
2. CONTROLLING DIMENSION: MILLIMETERS.
3. CONTOUR OF PACKAGE BEYOND DIMENSION R IS UNCONTROLLED.
4. LEAD DIMENSION IS UNCONTROLLED IN P AND BEYOND DIMENSION K MINIMUM.

	MILLIMETERS	
DIM	MIN	MAX
A	4.45	5.20
B	4.32	5.33
C	3.18	4.19
D	0.40	0.54
G	2.40	2.80
J	0.39	0.50
K	12.70	---
N	2.04	2.66
P	1.50	4.00
R	2.93	---
V	3.43	---

STYLES ON PAGE 2

DOCUMENT NUMBER:	**98ASB42022B**	Electronic versions are uncontrolled except when accessed directly from the Document Repository. Printed versions are uncontrolled except when stamped "CONTROLLED COPY" in red.
STATUS:	**ON SEMICONDUCTOR STANDARD**	
NEW STANDARD:		
DESCRIPTION:	**TO–92 (TO–226)**	**PAGE 1 OF 3**

TO−92 (TO−226)
CASE 29−11
ISSUE AM

DATE 09 MAR 2007

STYLE 1:
PIN 1. EMITTER
2. BASE
3. COLLECTOR

STYLE 2:
PIN 1. BASE
2. EMITTER
3. COLLECTOR

STYLE 3:
PIN 1. ANODE
2. ANODE
3. CATHODE

STYLE 4:
PIN 1. CATHODE
2. CATHODE
3. ANODE

STYLE 5:
PIN 1. DRAIN
2. SOURCE
3. GATE

STYLE 6:
PIN 1. GATE
2. SOURCE & SUBSTRATE
3. DRAIN

STYLE 7:
PIN 1. SOURCE
2. DRAIN
3. GATE

STYLE 8:
PIN 1. DRAIN
2. GATE
3. SOURCE & SUBSTRATE

STYLE 9:
PIN 1. BASE 1
2. EMITTER
3. BASE 2

STYLE 10:
PIN 1. CATHODE
2. GATE
3. ANODE

STYLE 11:
PIN 1. ANODE
2. CATHODE & ANODE
3. CATHODE

STYLE 12:
PIN 1. MAIN TERMINAL 1
2. GATE
3. MAIN TERMINAL 2

STYLE 13:
PIN 1. ANODE 1
2. GATE
3. CATHODE 2

STYLE 14:
PIN 1. EMITTER
2. COLLECTOR
3. BASE

STYLE 15:
PIN 1. ANODE 1
2. CATHODE
3. ANODE 2

STYLE 16:
PIN 1. ANODE
2. GATE
3. CATHODE

STYLE 17:
PIN 1. COLLECTOR
2. BASE
3. EMITTER

STYLE 18:
PIN 1. ANODE
2. CATHODE
3. NOT CONNECTED

STYLE 19:
PIN 1. GATE
2. ANODE
3. CATHODE

STYLE 20:
PIN 1. NOT CONNECTED
2. CATHODE
3. ANODE

STYLE 21:
PIN 1. COLLECTOR
2. EMITTER
3. BASE

STYLE 22:
PIN 1. SOURCE
2. GATE
3. DRAIN

STYLE 23:
PIN 1. GATE
2. SOURCE
3. DRAIN

STYLE 24:
PIN 1. EMITTER
2. COLLECTOR/ANODE
3. CATHODE

STYLE 25:
PIN 1. MT 1
2. GATE
3. MT 2

STYLE 26:
PIN 1. V_{CC}
2. GROUND 2
3. OUTPUT

STYLE 27:
PIN 1. MT
2. SUBSTRATE
3. MT

STYLE 28:
PIN 1. CATHODE
2. ANODE
3. GATE

STYLE 29:
PIN 1. NOT CONNECTED
2. ANODE
3. CATHODE

STYLE 30:
PIN 1. DRAIN
2. GATE
3. SOURCE

STYLE 31:
PIN 1. GATE
2. DRAIN
3. SOURCE

STYLE 32:
PIN 1. BASE
2. COLLECTOR
3. EMITTER

STYLE 33:
PIN 1. RETURN
2. INPUT
3. OUTPUT

STYLE 34:
PIN 1. INPUT
2. GROUND
3. LOGIC

STYLE 35:
PIN 1. GATE
2. COLLECTOR
3. EMITTER

ISSUE	REVISION	DATE
AM	ADDED BENT−LEAD TAPE & REEL VERSION. REQ. BY J. SUPINA.	09 MAR 2007

ON Semiconductor and ON are registered trademarks of Semiconductor Components Industries, LLC (SCILLC). SCILLC reserves the right to make changes without further notice to any products herein. SCILLC makes no warranty, representation or guarantee regarding the suitability of its products for any particular purpose, nor does SCILLC assume any liability arising out of the application or use of any product or circuit, and specifically disclaims any and all liability, including without limitation special, consequential or incidental damages. "Typical" parameters which may be provided in SCILLC data sheets and/or specifications can and do vary in different applications and actual performance may vary over time. All operating parameters, including "Typicals" must be validated for each customer application by customer's technical experts. SCILLC does not convey any license under its patent rights nor the rights of others. SCILLC products are not designed, intended, or authorized for use as components in systems intended for surgical implant into the body, or other applications intended to support or sustain life, or for any other application in which the failure of the SCILLC product could create a situation where personal injury or death may occur. Should Buyer purchase or use SCILLC products for any such unintended or unauthorized application, Buyer shall indemnify and hold SCILLC and its officers, employees, subsidiaries, affiliates, and distributors harmless against all claims, costs, damages, and expenses, and reasonable attorney fees arising out of, directly or indirectly, any claim of personal injury or death associated with such unintended or unauthorized use, even if such claim alleges that SCILLC was negligent regarding the design or manufacture of the part. SCILLC is an Equal Opportunity/Affirmative Action Employer. This literature is subject to all applicable copyright laws and is not for resale in any manner.

MECHANICAL CASE OUTLINE
PACKAGE DIMENSIONS



SCALE 1:1

SOIC−8 NB
CASE 751−07
ISSUE AK

DATE 16 FEB 2011

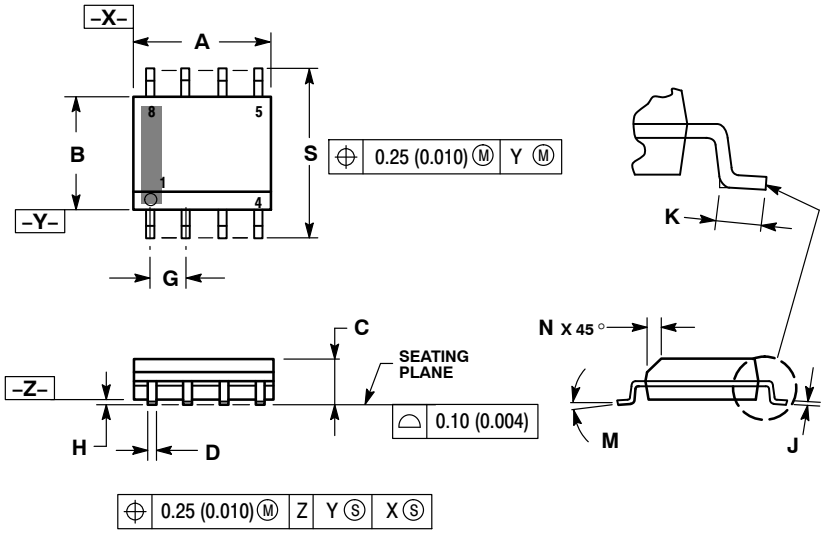

NOTES:
1. DIMENSIONING AND TOLERANCING PER ANSI Y14.5M, 1982.
2. CONTROLLING DIMENSION: MILLIMETER.
3. DIMENSION A AND B DO NOT INCLUDE MOLD PROTRUSION.
4. MAXIMUM MOLD PROTRUSION 0.15 (0.006) PER SIDE.
5. DIMENSION D DOES NOT INCLUDE DAMBAR PROTRUSION. ALLOWABLE DAMBAR PROTRUSION SHALL BE 0.127 (0.005) TOTAL IN EXCESS OF THE D DIMENSION AT MAXIMUM MATERIAL CONDITION.
6. 751−01 THRU 751−06 ARE OBSOLETE. NEW STANDARD IS 751−07.

	MILLIMETERS		INCHES	
DIM	MIN	MAX	MIN	MAX
A	4.80	5.00	0.189	0.197
B	3.80	4.00	0.150	0.157
C	1.35	1.75	0.053	0.069
D	0.33	0.51	0.013	0.020
G	1.27 BSC		0.050 BSC	
H	0.10	0.25	0.004	0.010
J	0.19	0.25	0.007	0.010
K	0.40	1.27	0.016	0.050
M	0 °	8 °	0 °	8 °
N	0.25	0.50	0.010	0.020
S	5.80	6.20	0.228	0.244

SOLDERING FOOTPRINT*

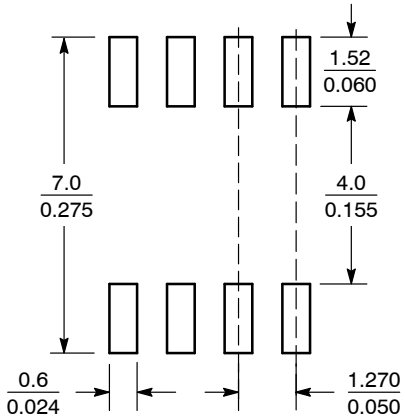

SCALE 6:1 (mm / inches)

*For additional information on our Pb−Free strategy and soldering details, please download the ON Semiconductor Soldering and Mounting Techniques Reference Manual, SOLDERRM/D.

GENERIC MARKING DIAGRAM*

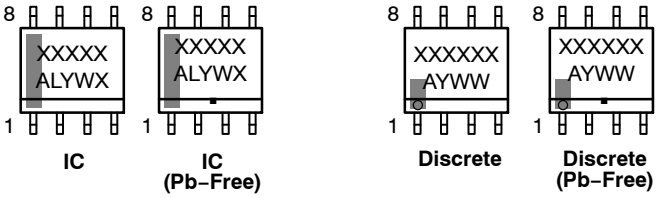

IC | IC (Pb−Free) | Discrete | Discrete (Pb−Free)

XXXXX = Specific Device Code
A = Assembly Location
L = Wafer Lot
Y = Year
W = Work Week
▪ = Pb−Free Package

XXXXXX = Specific Device Code
A = Assembly Location
Y = Year
WW = Work Week
▪ = Pb−Free Package

*This information is generic. Please refer to device data sheet for actual part marking. Pb−Free indicator, "G" or microdot "▪", may or may not be present. Some products may not follow the Generic Marking.

STYLES ON PAGE 2

DOCUMENT NUMBER:	**98ASB42564B**	Electronic versions are uncontrolled except when accessed directly from the Document Repository. Printed versions are uncontrolled except when stamped "CONTROLLED COPY" in red.
DESCRIPTION:	**SOIC−8 NB**	**PAGE 1 OF 2**

onsemi and onsemi are trademarks of Semiconductor Components Industries, LLC dba **onsemi** or its subsidiaries in the United States and/or other countries. **onsemi** reserves the right to make changes without further notice to any products herein. **onsemi** makes no warranty, representation or guarantee regarding the suitability of its products for any particular purpose, nor does **onsemi** assume any liability arising out of the application or use of any product or circuit, and specifically disclaims any and all liability, including without limitation special, consequential or incidental damages. **onsemi** does not convey any license under its patent rights nor the rights of others.

© Semiconductor Components Industries, LLC, 2019

SOIC−8 NB
CASE 751−07
ISSUE AK

DATE 16 FEB 2011

STYLE 1:
PIN 1. EMITTER
2. COLLECTOR
3. COLLECTOR
4. EMITTER
5. EMITTER
6. BASE
7. BASE
8. EMITTER

STYLE 2:
PIN 1. COLLECTOR, DIE, #1
2. COLLECTOR, #1
3. COLLECTOR, #2
4. COLLECTOR, #2
5. BASE, #2
6. EMITTER, #2
7. BASE, #1
8. EMITTER, #1

STYLE 3:
PIN 1. DRAIN, DIE #1
2. DRAIN, #1
3. DRAIN, #2
4. DRAIN, #2
5. GATE, #2
6. SOURCE, #2
7. GATE, #1
8. SOURCE, #1

STYLE 4:
PIN 1. ANODE
2. ANODE
3. ANODE
4. ANODE
5. ANODE
6. ANODE
7. ANODE
8. COMMON CATHODE

STYLE 5:
PIN 1. DRAIN
2. DRAIN
3. DRAIN
4. DRAIN
5. GATE
6. GATE
7. SOURCE
8. SOURCE

STYLE 6:
PIN 1. SOURCE
2. DRAIN
3. DRAIN
4. SOURCE
5. SOURCE
6. GATE
7. GATE
8. SOURCE

STYLE 7:
PIN 1. INPUT
2. EXTERNAL BYPASS
3. THIRD STAGE SOURCE
4. GROUND
5. DRAIN
6. GATE 3
7. SECOND STAGE Vd
8. FIRST STAGE Vd

STYLE 8:
PIN 1. COLLECTOR, DIE #1
2. BASE, #1
3. BASE, #2
4. COLLECTOR, #2
5. COLLECTOR, #2
6. EMITTER, #2
7. EMITTER, #1
8. COLLECTOR, #1

STYLE 9:
PIN 1. EMITTER, COMMON
2. COLLECTOR, DIE #1
3. COLLECTOR, DIE #2
4. EMITTER, COMMON
5. EMITTER, COMMON
6. BASE, DIE #2
7. BASE, DIE #1
8. EMITTER, COMMON

STYLE 10:
PIN 1. GROUND
2. BIAS 1
3. OUTPUT
4. GROUND
5. GROUND
6. BIAS 2
7. INPUT
8. GROUND

STYLE 11:
PIN 1. SOURCE 1
2. GATE 1
3. SOURCE 2
4. GATE 2
5. DRAIN 2
6. DRAIN 2
7. DRAIN 1
8. DRAIN 1

STYLE 12:
PIN 1. SOURCE
2. SOURCE
3. SOURCE
4. GATE
5. DRAIN
6. DRAIN
7. DRAIN
8. DRAIN

STYLE 13:
PIN 1. N.C.
2. SOURCE
3. SOURCE
4. GATE
5. DRAIN
6. DRAIN
7. DRAIN
8. DRAIN

STYLE 14:
PIN 1. N−SOURCE
2. N−GATE
3. P−SOURCE
4. P−GATE
5. P−DRAIN
6. P−DRAIN
7. N−DRAIN
8. N−DRAIN

STYLE 15:
PIN 1. ANODE 1
2. ANODE 1
3. ANODE 1
4. ANODE 1
5. CATHODE, COMMON
6. CATHODE, COMMON
7. CATHODE, COMMON
8. CATHODE, COMMON

STYLE 16:
PIN 1. EMITTER, DIE #1
2. BASE, DIE #1
3. EMITTER, DIE #2
4. BASE, DIE #2
5. COLLECTOR, DIE #2
6. COLLECTOR, DIE #2
7. COLLECTOR, DIE #1
8. COLLECTOR, DIE #1

STYLE 17:
PIN 1. VCC
2. V2OUT
3. V1OUT
4. TXE
5. RXE
6. VEE
7. GND
8. ACC

STYLE 18:
PIN 1. ANODE
2. ANODE
3. SOURCE
4. GATE
5. DRAIN
6. DRAIN
7. CATHODE
8. CATHODE

STYLE 19:
PIN 1. SOURCE 1
2. GATE 1
3. SOURCE 2
4. GATE 2
5. DRAIN 2
6. MIRROR 2
7. DRAIN 1
8. MIRROR 1

STYLE 20:
PIN 1. SOURCE (N)
2. GATE (N)
3. SOURCE (P)
4. GATE (P)
5. DRAIN
6. DRAIN
7. DRAIN
8. DRAIN

STYLE 21:
PIN 1. CATHODE 1
2. CATHODE 2
3. CATHODE 3
4. CATHODE 4
5. CATHODE 5
6. COMMON ANODE
7. COMMON ANODE
8. CATHODE 6

STYLE 22:
PIN 1. I/O LINE 1
2. COMMON CATHODE/VCC
3. COMMON CATHODE/VCC
4. I/O LINE 3
5. COMMON ANODE/GND
6. I/O LINE 4
7. I/O LINE 5
8. COMMON ANODE/GND

STYLE 23:
PIN 1. LINE 1 IN
2. COMMON ANODE/GND
3. COMMON ANODE/GND
4. LINE 2 IN
5. LINE 2 OUT
6. COMMON ANODE/GND
7. COMMON ANODE/GND
8. LINE 1 OUT

STYLE 24:
PIN 1. BASE
2. EMITTER
3. COLLECTOR/ANODE
4. COLLECTOR/ANODE
5. CATHODE
6. CATHODE
7. COLLECTOR/ANODE
8. COLLECTOR/ANODE

STYLE 25:
PIN 1. VIN
2. N/C
3. REXT
4. GND
5. IOUT
6. IOUT
7. IOUT
8. IOUT

STYLE 26:
PIN 1. GND
2. dv/dt
3. ENABLE
4. ILIMIT
5. SOURCE
6. SOURCE
7. SOURCE
8. VCC

STYLE 27:
PIN 1. ILIMIT
2. OVLO
3. UVLO
4. INPUT+
5. SOURCE
6. SOURCE
7. SOURCE
8. DRAIN

STYLE 28:
PIN 1. SW_TO_GND
2. DASIC_OFF
3. DASIC_SW_DET
4. GND
5. V_MON
6. VBULK
7. VBULK
8. VIN

STYLE 29:
PIN 1. BASE, DIE #1
2. EMITTER, #1
3. BASE, #2
4. EMITTER, #2
5. COLLECTOR, #2
6. COLLECTOR, #2
7. COLLECTOR, #1
8. COLLECTOR, #1

STYLE 30:
PIN 1. DRAIN 1
2. DRAIN 1
3. GATE 2
4. SOURCE 2
5. SOURCE 1/DRAIN 2
6. SOURCE 1/DRAIN 2
7. SOURCE 1/DRAIN 2
8. GATE 1

DOCUMENT NUMBER:	**98ASB42564B**	Electronic versions are uncontrolled except when accessed directly from the Document Repository. Printed versions are uncontrolled except when stamped "CONTROLLED COPY" in red.	
DESCRIPTION:	**SOIC−8 NB**		**PAGE 2 OF 2**

onsemi and ONSEMI. are trademarks of Semiconductor Components Industries, LLC dba **onsemi** or its subsidiaries in the United States and/or other countries. **onsemi** reserves the right to make changes without further notice to any products herein. **onsemi** makes no warranty, representation or guarantee regarding the suitability of its products for any particular purpose, nor does **onsemi** assume any liability arising out of the application or use of any product or circuit, and specifically disclaims any and all liability, including without limitation special, consequential or incidental damages. **onsemi** does not convey any license under its patent rights nor the rights of others.

© Semiconductor Components Industries, LLC, 2019

onsemi, , and other names, marks, and brands are registered and/or common law trademarks of Semiconductor Components Industries, LLC dba "**onsemi**" or its affiliates and/or subsidiaries in the United States and/or other countries. **onsemi** owns the rights to a number of patents, trademarks, copyrights, trade secrets, and other intellectual property. A listing of **onsemi**'s product/patent coverage may be accessed at www.onsemi.com/site/pdf/Patent−Marking.pdf. **onsemi** reserves the right to make changes at any time to any products or information herein, without notice. The information herein is provided "as−is" and **onsemi** makes no warranty, representation or guarantee regarding the accuracy of the information, product features, availability, functionality, or suitability of its products for any particular purpose, nor does **onsemi** assume any liability arising out of the application or use of any product or circuit, and specifically disclaims any and all liability, including without limitation special, consequential or incidental damages. Buyer is responsible for its products and applications using **onsemi** products, including compliance with all laws, regulations and safety requirements or standards, regardless of any support or applications information provided by **onsemi**. "Typical" parameters which may be provided in **onsemi** data sheets and/or specifications can and do vary in different applications and actual performance may vary over time. All operating parameters, including "Typicals" must be validated for each customer application by customer's technical experts. **onsemi** does not convey any license under any of its intellectual property rights nor the rights of others. **onsemi** products are not designed, intended, or authorized for use as a critical component in life support systems or any FDA Class 3 medical devices or medical devices with a same or similar classification in a foreign jurisdiction or any devices intended for implantation in the human body. Should Buyer purchase or use **onsemi** products for any such unintended or unauthorized application, Buyer shall indemnify and hold **onsemi** and its officers, employees, subsidiaries, affiliates, and distributors harmless against all claims, costs, damages, and expenses, and reasonable attorney fees arising out of, directly or indirectly, any claim of personal injury or death associated with such unintended or unauthorized use, even if such claim alleges that **onsemi** was negligent regarding the design or manufacture of the part. **onsemi** is an Equal Opportunity/Affirmative Action Employer. This literature is subject to all applicable copyright laws and is not for resale in any manner.

ADDITIONAL INFORMATION

TECHNICAL PUBLICATIONS:
Technical Library: www.onsemi.com/design/resources/technical−documentation
onsemi Website: www.onsemi.com

ONLINE SUPPORT: www.onsemi.com/support
For additional information, please contact your local Sales Representative at www.onsemi.com/support/sales