NCV7471, NCV7471A

System Basis Chip with a High-Speed CAN, Two LINs and a Boost-Buck DC/DC Converter



ON Semiconductor®

www.onsemi.com

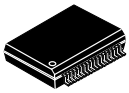

SSOP36−EP
DQ SUFFIX
CASE 940AB

MARKING DIAGRAM

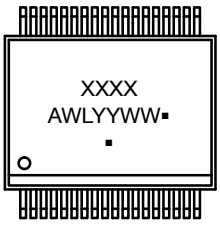

XXXX = NCV7471−5 or NCV7471A−5
A = Assembly Location
WL = Wafer Lot
YY = Year
WW = Work Week
▪ = Pb−Free Package

(Note: Microdot may be in either location)

ORDERING INFORMATION

See detailed ordering and shipping information on page 49 of this data sheet.

NCV7471(A) is a System Basis Chip (SBC) integrating functions typically found in automotive Electronic Control Units (ECUs) in the body domain. NCV7471 provides and monitors the low−voltage power supplies for the application microcontroller and other loads, monitors the application software via a watchdog and includes high−speed CAN and LIN transceivers allowing the ECU to host multiple communication nodes or to act as a gateway unit. The on−chip state controller ensures safe power−up sequence and supports low−power modes with a configurable set of features including wakeup from the communication buses or by a local digital signal WU. The status of several NCV7471(A) internal blocks can be read by the microcontroller through the serial peripheral interface or can be used to generate an interrupt request.

Features

- Control Logic
  - Ensures safe power−up sequence and the correct reaction to different supply conditions
  - Controls mode transitions including the power management and wakeup treatment − bus wakeups, local wakeups (via WU pin) and cyclic wakeups (through the on−chip timer)
  - Generates reset and interrupt requests
- Serial Peripheral Interface
  - Operates with 16−bit frames
  - Ensures communication with the ECU's microcontroller unit
  - Mode settings, chip status feedback and watchdog are accessible through eight twelve−bits registers
- 5 V VOUT Supply from a DC/DC Converter
  - Can deliver up to 500 mA with accuracy of ±2%
  - Supplies typically the ECU's microcontroller
- 5 V VOUT2 Low−drop Output Regulator
  - Can supply external loads − e.g. sensors
  - Controlled by SPI and the state machine
  - Protected against short to the car battery
- A High−speed CAN Transceiver
  - ISO11898−2 and ISO11898−5 compliant
  - Communication speed up to 1 Mbps
  - TxD dominant time−out protection
- Two LIN Transceivers
  - LIN2.X and J2602 compliant
  - TxD dominant time−out protection
- Wakeup Input WU
  - Edge−sensitive high−voltage input
  - Can be used as a wake−up source or as a logical input polled through SPI
- Protection and Monitoring Functions
  - Monitoring of the main supply through the V_MID point
  - Monitoring of VOUT supply output with programmable threshold
  - VOUT2 supply diagnosis through SPI and interrupt
  - Thermal warning and thermal shutdown protection
  - Programmable watchdog monitoring the ECU software
- NCV Prefix for Automotive and Other Applications Requiring Unique Site and Control Change Requirements; AEC−Q100 Qualified and PPAP Capable
- These Devices are Pb−Free, Halogen Free/BFR Free and are RoHS Compliant

© Semiconductor Components Industries, LLC, 2015

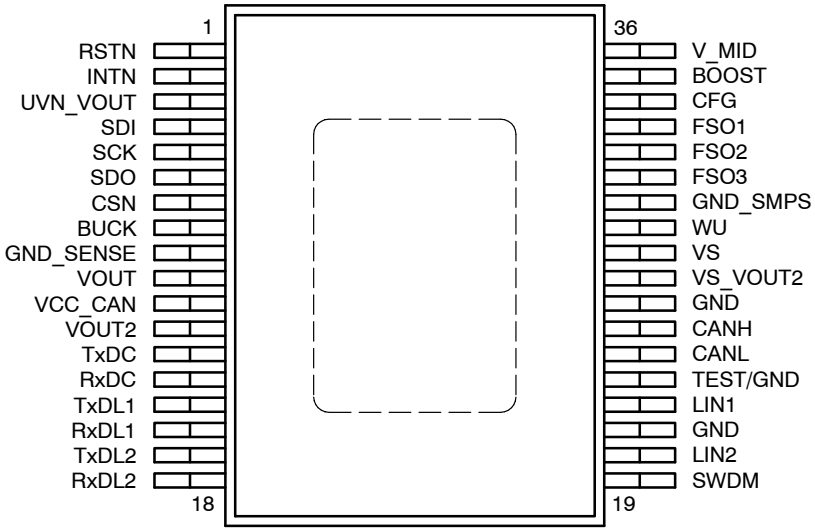

Pin Connections

Table of Contents

Block Diagram . . . 3
Pin Description . . . 4
Application Information . . . 5
Example Application Diagram . . . 5
External Components . . . 6
Functional Description . . . 7
Power Supplies . . . 7
Communication Transceivers . . . 10
WU – Local Wakeup Input . . . 14
Operating Modes . . . 15
Watchdog . . . 19
System Reset . . . 21
Event Flags and Interrupt Requests . . . 22
Junction Temperature Monitoring . . . 25
FSO1/2/3 – Fail-Safe Outputs . . . 25
SWDM and CFG Digital Inputs . . . 27
SPI – Serial Peripheral Interface . . . 28
Absolute Maximum Ratings . . . 38
Operating Ranges . . . 39
Electrical Characteristics . . . 40
Power Supply . . . 40
CAN Transceiver . . . 43
LIN Transceivers . . . 45
Digital Control Timing and SPI Timing . . . 47
Thermal Protection . . . 48
Digital IO Pins . . . 48
CFG and SWDM Pins . . . 49
FSO Pins . . . 49
WU Pin . . . 49
Device Ordering information . . . 49

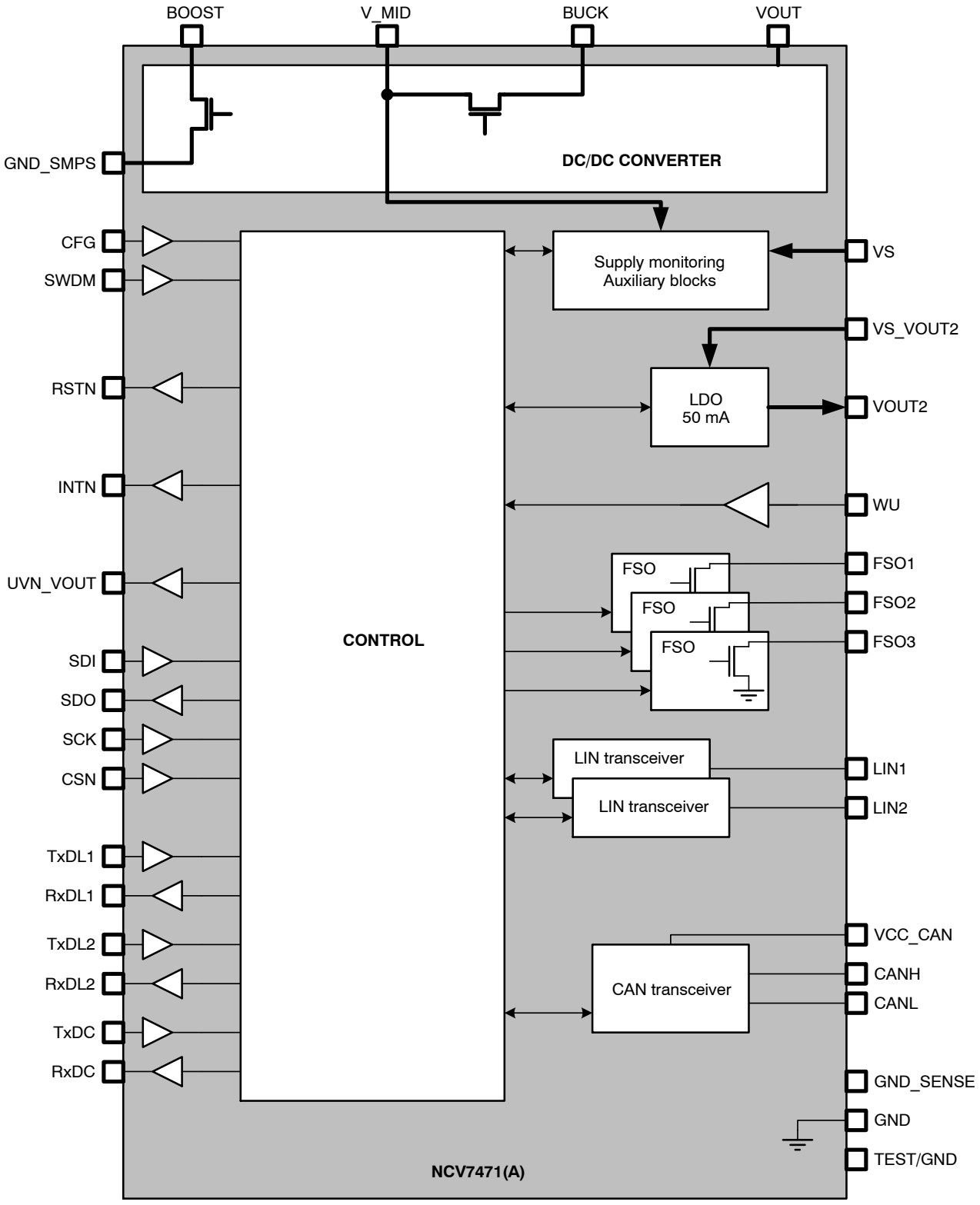

Figure 1. Block Diagram

Table 1. PIN DESCRIPTION

Pin Number	Pin Name	Pin Type (LV = Low Voltage; HV = High Voltage)	Pin Function
1	RSTN	LV digital input/output; open drain; internal pull−up	System reset
2	INTN	LV digital output; open drain; internal pull−up	Interrupt request to the MCU
3	UVN_VOUT		VOUT under−voltage signal to the MCU
4	SDI	LV digital input; internal pull−down	SPI data input
5	SCK	LV digital input; internal pull−down	SPI clock input
6	SDO	LV digital output; push−pull with tri−state	SPI data output
7	CSN	LV digital input (HV tolerant); internal pull−up	SPI chip select input
8	BUCK	HV analog input/output	Connection of L_{buck} coil to the integrated serial switch
9	GND_SENSE	Ground connection	Ground sense for the internal circuitry (e.g. VOUT2 regulator)
10	VOUT	LV supply input	Feedback of the DC/DC converter output; main 5 V LV supply for the digital IO's
11	VCC_CAN	LV supply input	Core supply for the CAN transceiver
12	VOUT2	LV supply output	Output of the 5 V/50 mA low−drop regulator for external loads
13	TxDC	LV digital input; internal pull−up	Input of the data to be transmitted on CAN bus
14	RxDC	LV digital output; push−pull	Output of data received from CAN bus
15	TxDL1	LV digital input; internal pull−up	Input of the data to be transmitted from LIN1 bus
16	RxDL1	LV digital output; push−pull	Output of data received on LIN1 bus
17	TxDL2	LV digital input; internal pull−up	Input of the data to be transmitted from LIN2 bus
18	RxDL2	LV digital output; push−pull	Output of data received on LIN2 bus
19	SWDM	HV digital input; internal pull−down	Input to select the SW Development configuration
20	LIN2	LIN bus interface	LIN2 bus line
21	GND	Ground connection	Ground connection
22	LIN1	LIN bus interface	LIN1 bus line
23	TEST/GND	LV digital input; internal pull−down	Test−mode entry pin for production testing; should be grounded in the application
24	CANL	CAN bus interface	CANL line of the CAN bus
25	CANH	CAN bus interface	CANH line of the CAN bus
26	GND	Ground connection	Ground connection
27	VS_VOUT2	HV supply input	Separate line input for the VOUT2 low−drop regulator
28	VS	HV supply input	Line supply for the battery−related core blocks
29	WU	HV digital input	Input for monitoring of external contacts
30	GND_SMPS	Ground connection	Power ground connection for the DC/DC converter
31	FSO3	HV digital output; open drain low−side	Indication of a fail−safe event by rectangular signal of 100 Hz with 20% duty cycle; high−impedant in normal operation
32	FSO2	HV digital output; open drain low−side	Indication of a fail−safe event by rectangular signal of 1.25 Hz with 50% duty cycle; high−impedant in normal operation
33	FSO1	HV digital output; open drain low−side	Indication of a fail−safe event by static Low level; high−impedant in normal operation
34	CFG	HV digital input; internal pull−down	Configuration of fail−safe behavior; in SW Development, CFG enables boost stage operation
35	BOOST	HV analog input/output	Connection of L_{boost} coil to the integrated switch to ground.
36	V_MID	HV analog input/output	Intermediate point connecting the step−up and step−down stages of the DC/DC converter

APPLICATION INFORMATION

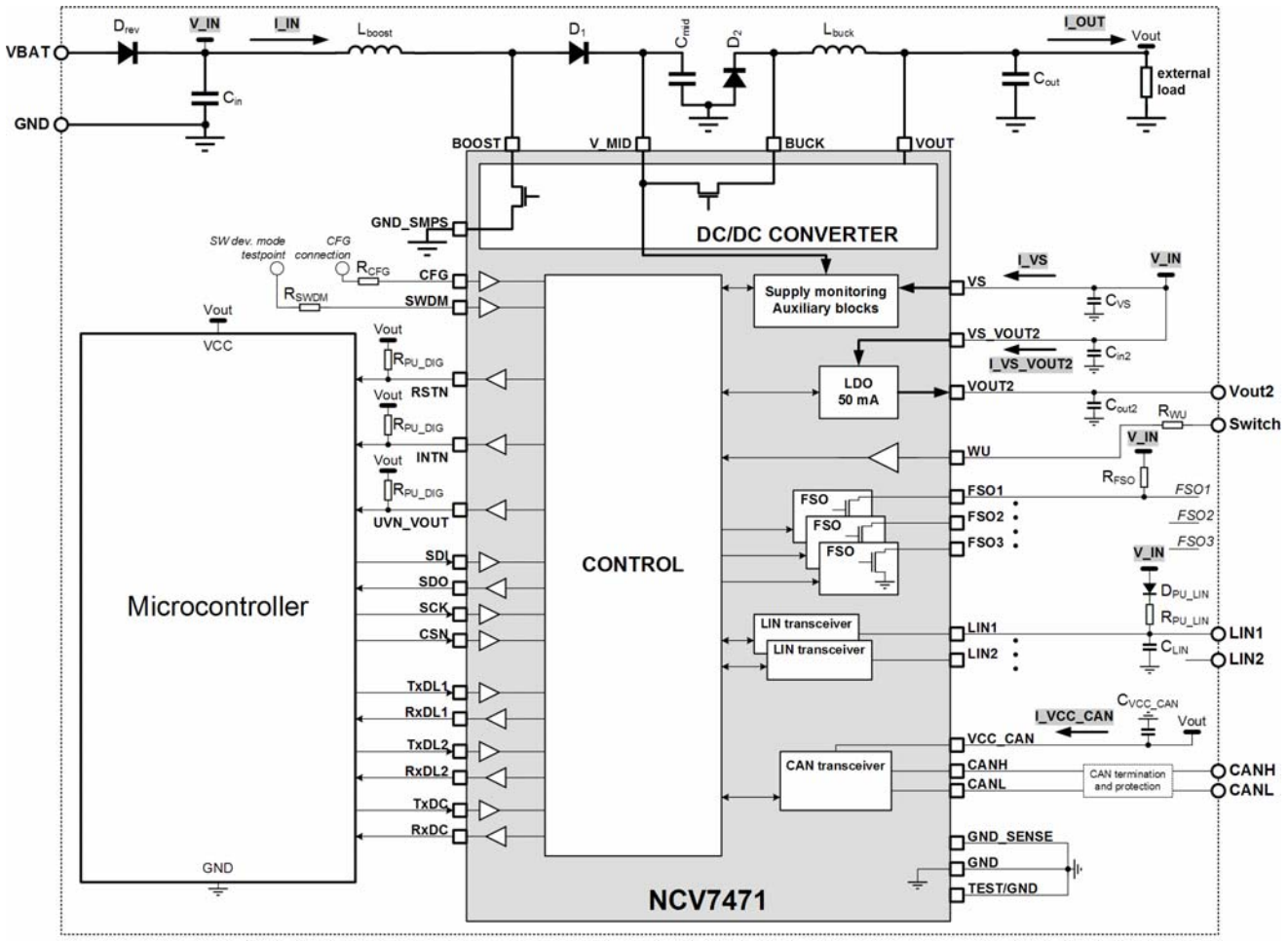

Figure 2. Example Application Diagram

External Components

Overview of external components from application schematic in Figure 2 is given in Table 2 together with their recommended or required values.

Table 2. EXTERNAL COMPONENTS OVERVIEW

Component Name	Description	Value	Note
D_{rev}	Reverse−protection diode	parameters application−specific; e.g. 0.5 A / 50 V	Values and types depend on the application needs and conditions. Guidelines for their selection can be found in the product's application note. The given examples are suitable for VOUT loads of up to 250 mA, and for V_IN above 3.3 V.
C_{in}	Filtering capacitor for the DC/DC converter input	≥ 1 μF ceramic; e.g. 1 μF / 40 V	
L_{boost}	Inductor for the converter boost stage; EMC filtering inductance	recommended range 3.3 μH − 10 μH; e.g. 3.3 μH / 0.77 A, type B82422H1332+000	
D_1	Diode for the converter boost stage	Shottky or ultra−fast; parameters application−specific; e.g. 0.5 A / 50 V	
C_{mid}	Filtering and stabilization capacitor for the converter intermediate voltage	≥ 1 μF ceramic; e.g. 1 μF / 40 V	
D_2	Diode for the converter buck stage	Shottky or ultra−fast; parameters application−specific; e.g. 0.25 A / 50 V	
L_{buck}	Inductor for the converter buck stage	recommended range 10 μH − 22 μH; e.g. 10 μH / 0.5 A, type B82422H1103+000	
C_{out}	Filtering and stabilization capacitor for the converter output voltage	≥ 10 μF ceramic; e.g. 10 μF / 10 V	
C_{VS}	Filtering capacitor for the VS input supplying LIN and auxiliary internal circuitry	recommended >100 nF ceramic	optional; depends on the application PCB
C_{in2}	Filtering capacitor for the VOUT2 regulator input	recommended >100 nF ceramic	optional; depends on the application PCB
C_{out2}	Filtering and stabilization capacitor for the VOUT2 regulator output	>1 μF ceramic (recommended 2.2 μF nominal)	required for VOUT2 stability
R_{WU}	Protection and filtering resistor for the WU input	recommended 33 kΩ nominal	optional; depends on the application needs
R_{FSO}			depends on the application needs
D_{PU_LIN}	Pull−up diode on LIN line		required only for master LIN node
R_{PU_LIN}	Pull−up resistor on LIN line	1 kΩ nominal	
C_{LIN}	Filtering capacitor on LIN line	Typically 100 pF − 220 pF nominal	optional; is function of the entire LIN network
C_{VCC_CAN}	Filtering capacitor on the CAN transceiver supply input	recommended >100 nF ceramic	optional; depends on the application PCB
CAN termination and protection			optional; is function of the entire CAN network
R_{PU_DIG}	Pull−up resistor for the open−drain digital outputs (INTN, RSTN, UVN_VOUT)	recommended 10 kΩ nominal	optional; only if the integrated pull−ups are not sufficient for the application
R_{SWDM}	Protection resistor on SWDM input	recommended 10 kΩ nominal	optional; depends on the application
R_{CFG}	Protection resistor on CFG input	recommended 10 kΩ nominal	optional; depends on the application CFG connection details can be found in the product's application note.

FUNCTIONAL DESCRIPTION

POWER SUPPLIES

VS Supply Input

VS pin of NCV7471(A) is typically connected to the car battery through a reverse−protection diode and can be exposed to all relevant automotive disturbances (ISO7637 pulses, system ESD...). VS supplies mainly the integrated LIN transceivers. Filtering capacitors should be connected between VS and GND.

V_MID Supply Point

V_MID node is the connection point between the two stages of the DC/DC converter. If only the buck (i.e. step−down) function of the converter is active (because the input voltage is sufficient or because boosting is not enabled), V_MID level stays two diode drops below the battery input to the application – see Figure 2. In case the boost stage of the converter is active, V_MID voltage is regulated to *V_MID_reg* (6.5 V typically).

V_MID pin is used to supply the core auxiliary blocks of the device – namely the voltage reference, biasing, internal regulator and the wakeup detector of the CAN bus. When the DC/DC converter is boosting, it is ensured that the internal core blocks remain functional even for low input supply level.

During power−up of the battery supply, V_MID point must reach *V_MID_PORH* level in order for the circuit to become functional – the internal state machine is initiated and the converter is activated in buck−only mode. The circuit remains functional until V_MID falls back below *V_MID_PORL* level, when the device enters the Shut−down mode.

VOUT DC/DC Converter

The main application low−voltage supply is provided by an integrated boost−buck DC/DC converter, delivering a 5 V output VOUT. The converter can work in two modes:

- **Buck−only mode** is the default mode of the VOUT power−supply. In this mode, the boosting part of the converter is never activated and the resulting VOUT voltage can be only lower than the input line voltage. Buck−only mode is applied during the initial power−up (after the V_IN connection), wakeup from Sleep−mode and also recovery from the Fail−safe mode.
- **Boost−buck mode** ensures that the correct VOUT voltage is generated even if the input line voltage falls below the required VOUT level. This mode can be requested through the corresponding SPI control register. If selected, the boost−buck mode is used during Reset, Start−up, Normal, Standby, and Flash modes. It is also preserved during VOUT under−voltage recovery through Power−up mode. In SW Development configuration, boost−buck mode can be additionally enabled by High level on CFG pin. No SPI communication is therefore necessary to select the DC/DC mode in SW Development – see Table 3.

Table 3. CONTROL OF DC/DC CONVERTER MODES (“X” Means “Don’t Care”)

Device Configuration	SPI enBOOST Bit	Signal on CFG Pin	Applied DC/DC Mode
Config 1, 2, 3, 4	Low	X	Buck−Only
	High		Boost−Buck
SW Development	Low	Low	Buck−Only
		High	Boost−Buck
	High	X	Boost−Buck

By default, the converter works with a fixed switching frequency *fsw_DCDC* (typ. 485 kHz). Through the SPI settings, a switching frequency modulation can be applied with fixed modulation frequency of 10 kHz and three selectable modulation depth values – 10%, 20% or 30% of the nominal frequency.

VOUT level is monitored by an under−voltage detector with multiple thresholds:

- Comparison with selectable threshold *VOUT_RESx*. By default, the lowest threshold (typ. 3.1 V) applies for the state machine control and the activation of the RSTN signal. This reset threshold can be changed via SPI to any of the four programmable values.
- A second monitoring signal – UVN_VOUT – is generated based on comparison of the VOUT level with the highest monitoring level (typ. 4.65 V).
- VOUT is compared with a fixed threshold *VOUT_FAIL* (typ. 2 V). If VOUT stays below *VOUT_FAIL* level for longer than *t_VOUT_powerup*, a VOUT short−circuit is detected and Fail−safe mode is entered with the corresponding fail−safe information stored in SPI.

Both UVN_VOUT and RSTN pins provide an open drain output with integrated pull−up resistor. The split between reset−generating level VOUT_RESx and an under−voltage indication allows coping with VOUT dips in case of high loads coinciding with low input line voltages. The function of the VOUT and V_MID monitoring is illustrated in Figure 3 and Figure 4. FSO1 output activation and Fail−safe mode entry caused by VOUT undervoltage are shown in Figure 5 and Figure 6 (NCV7471A only).

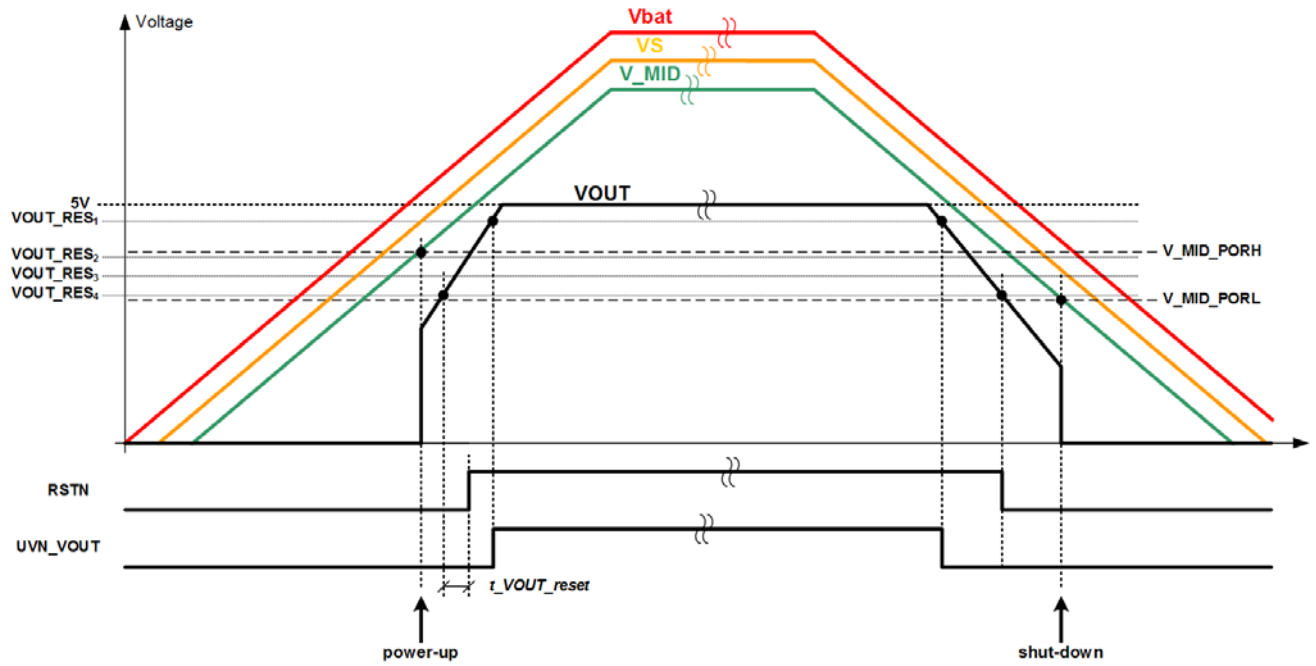

Figure 3. V_MID and VOUT Supply Monitoring (Filtering times are neglected)

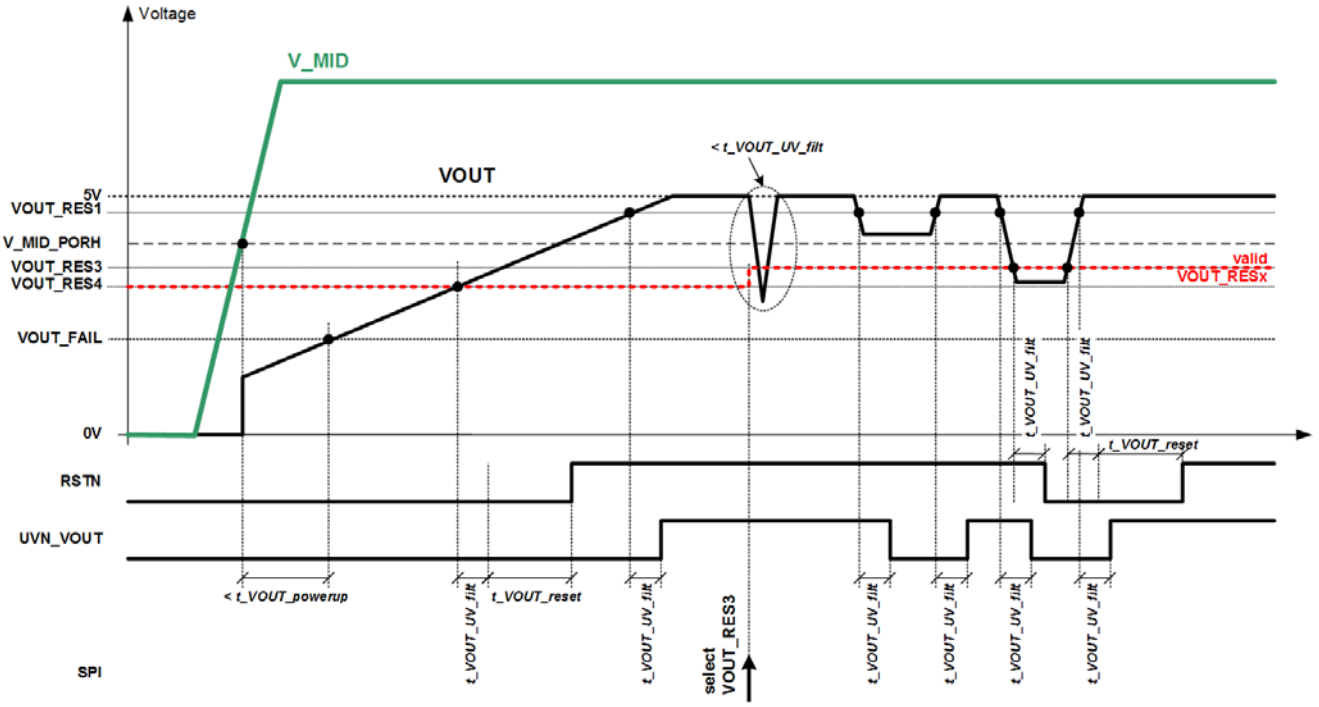

Figure 4. VOUT Monitoring

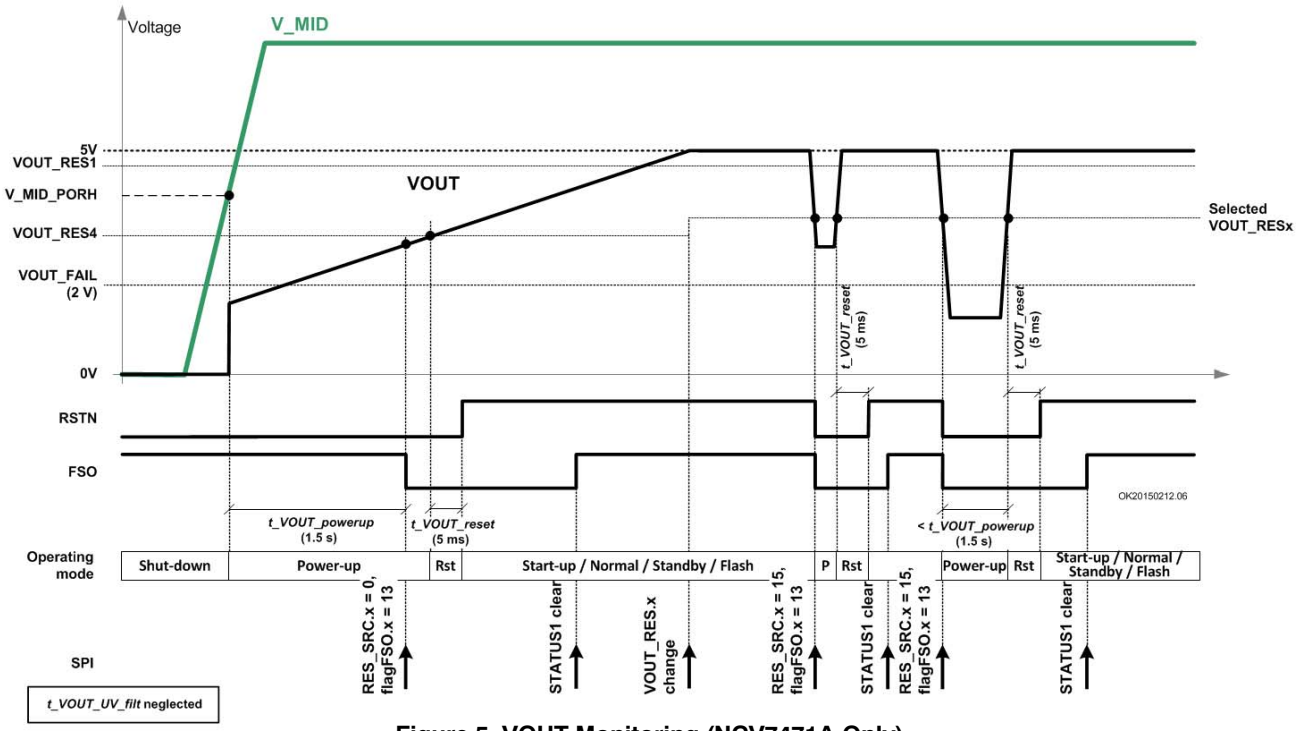

Figure 5. VOUT Monitoring (NCV7471A Only)

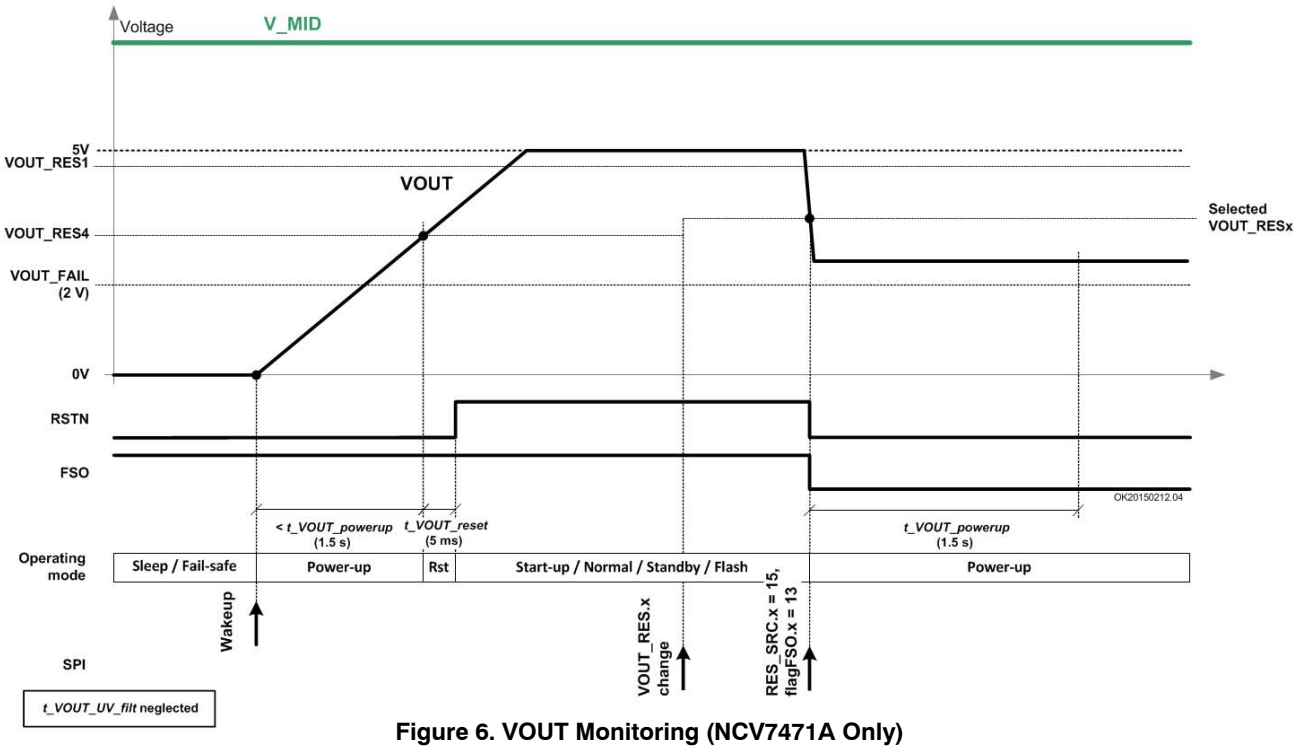

Figure 6. VOUT Monitoring (NCV7471A Only)

VOUT2 Auxiliary Supply

An integrated low−drop regulator provides a second 5 V supply VOUT2 to external loads, typically sensors. The regulator's input is taken from a dedicated pin VS_VOUT2, which does not feature an explicit under−voltage monitoring. VS_VOUT2 would be typically connected to the VS pin or, in function of the application needs, might be taken from other nodes like, e.g., the DC/DC converter's auxiliary node V_MID.

After a power−up or a reset event, as well as in Sleep mode, VOUT2 regulator is switched off. In Start−up, Normal, Standby and Flash modes, it can be freely activated or deactivated via SPI control register.

VOUT2 is diagnosed for under−voltage and over−voltage via comparators with fixed thresholds *VOUT2_UV* and *VOUT2_OV*, respectively. Under−voltage detection is working only when VOUT2 regulator is on, while the over−voltage is monitored regardless the VOUT2 regulator activation. Output of both detectors can be polled via SPI status bits. Change of the detection status (in either direction) is recorded as an SPI flag bit and, if enabled, can lead to an interrupt.

VCC_CAN Transceiver Supply

The integrated CAN transceiver uses a dedicated supply input VCC_CAN. The transceiver is supplied by VCC_CAN when configured for full−speed transmission or reception. When configured for wakeup detection, the transceiver is internally supplied from the V_MID pin.

A 5 V supply must be externally connected to VCC_CAN pin for the correct transceiver's functionality in full−speed mode ("CAN Normal" or "CAN Receive−only"). VCC_CAN input has no dedicated monitoring and its correct level shall be ensured by the application – e.g. if VOUT is connected to VCC_CAN, then VOUT under−voltage monitoring can also cover the correct VCC_CAN level.

Communication Transceivers

High−Speed CAN Transceiver

NCV7471(A) contains a high−speed CAN transceiver compliant with ISO11898−2 and ISO11898−5 standards, consisting of a transmitter, receiver and wakeup detector. The CAN transceiver can be connected to the bus line via a pair of pins CANH and CANL, and to the digital control through pins TxDC and RxDC. The functional mode of the CAN transceiver depends on the chip operating mode and on the status of the corresponding SPI bits – see Table 4, Table 5 and Figure 7.

Table 4. CAN TRANSCEIVER SPI CONTROL

SPI Control Bits		CAN Transceiver Function in Operating Modes				
modCAN.1	modCAN.0	Power−up Reset	Start−up Normal Flash	Standby	Sleep	Fail−safe (except thermal shut−down)
0	0	CAN Off	CAN Off	CAN Off	CAN Off	CAN Wakeup
0	1	CAN Off	CAN Wakeup	CAN Wakeup	CAN Wakeup	CAN Wakeup
1	0	CAN Off	CAN Receive−only	CAN Receive−only	CAN Off	CAN Wakeup
1	1	CAN Off	CAN Normal	CAN Off	CAN Off	CAN Wakeup

Table 5. CAN TRANSCEIVER MODES

Mode	Transceiver	RxDC Pin	TxDC Pin	CANH/CANL Pins	Supply
CAN Off	Fully off	High (if VOUT available)	Ignored	Biased to GND	n.a.
CAN Wakeup	Wakeup detector active	Low if wakeup detected; High otherwise (if VOUT available)	Ignored	Biased to GND	V_MID
CAN Receive−Only	Receiver active	Received data	Ignored	Biased to VCC_CAN/2	VCC_CAN
CAN Normal	Transmitter and Receiver active	Received data	Data to transmit; checked for time−out	Biased to VCC_CAN/2	VCC_CAN

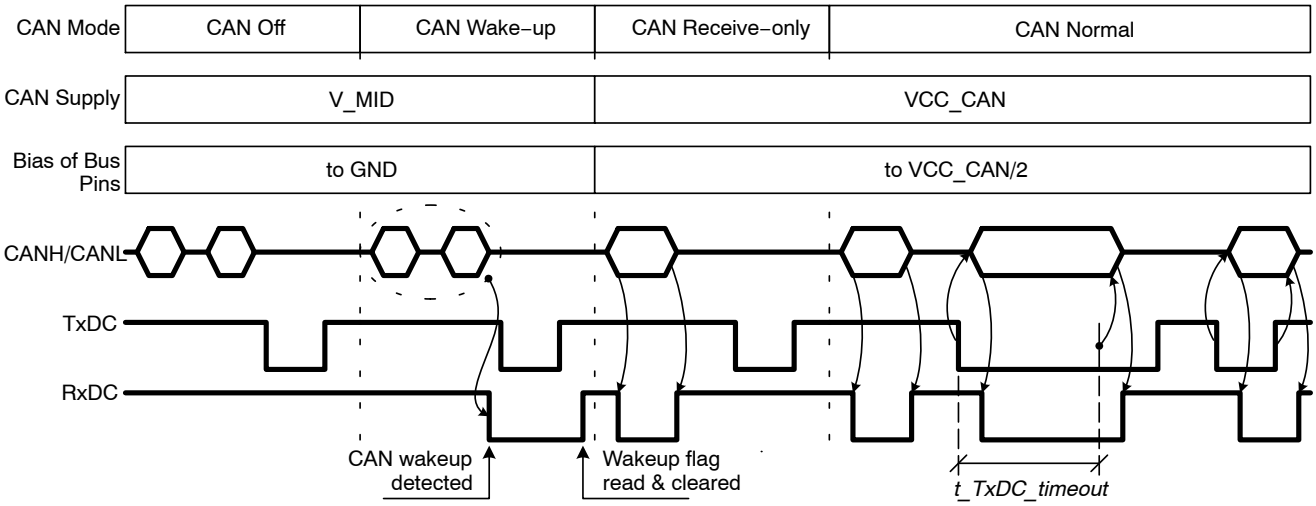

Figure 7. CAN Transceiver Modes

In **CAN Off** mode, the CAN transceiver is fully deactivated. Pin RxDC stays High (as long as VOUT is provided) and logical level on TxDC is ignored. The bus pins are weakly biased to ground via the input impedance.

In **CAN Wakeup** mode, the CAN transceiver, being supplied purely from V_MID pin, detects wakeups on the CAN lines. A valid wakeup on the CAN bus corresponds to a pattern of two dominants at least *t_CAN_wake_dom* long, interleaved by a recessive at least *t_CAN_wake_rec* long. The total length of the pattern may not exceed *t_CAN_wake_timeout.* The CAN wakeup handling is illustrated in Figure 8.

In function of the current operating mode, a CAN wakeup can lead either to an interrupt request or to a reset. A CAN wakeup is also indicated by a Low level on the RxDC pin (which otherwise stays High as long as VOUT is available). Logical level on TxDC pin is ignored. The bus pins remain weakly biased to ground in the wakeup CAN mode.

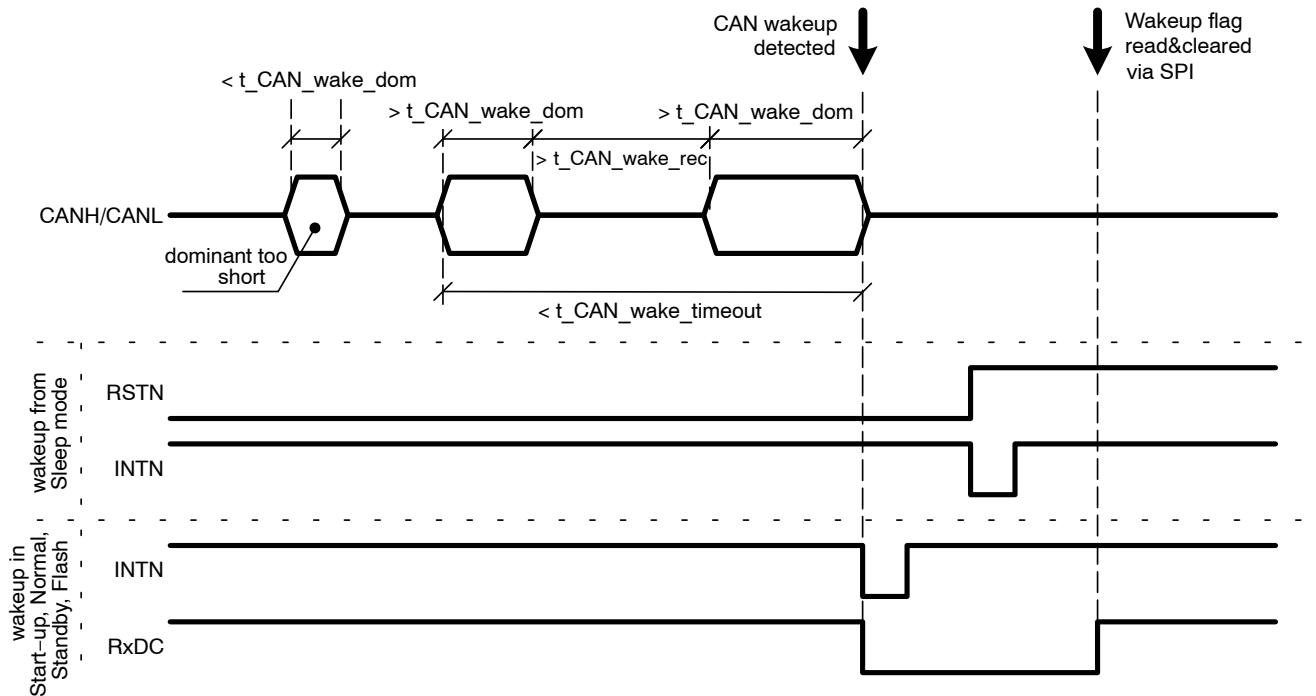

Figure 8. CAN Wakeup Detection

In **CAN Receive−Only** mode, the receiver part of the CAN block detects data on the bus with the full speed and signals them on the RxDC pin. Logical level on TxDC pin is ignored. The receiver is supplied from the VCC_CAN supply input. The bus pins are biased to VCC_CAN/2 level through the input circuitry.

In **CAN Normal** mode, the full CAN transceiver functionality is available. Both reception and transmission at the full speed can be used. Received data are signaled via RxDC pin, while logical level on TxDC pin is translated into the corresponding bus level (TxDC = High or Low leading to a recessive or dominant being transmitted, respectively). Both the receiving and the transmitting part are supplied from the VCC_CAN supply input. The bus pins are biased to VCC_CAN/2 level through the input circuitry. TxDC input signal is monitored with a time−out timer. If a dominant longer than *t_TxDC_timeout* is requested (i.e. TxDC is Low for longer than *t_TxDC_timeout*), the transmission is internally disabled. The reception from the CAN bus remains functional and the internally set CAN transceiver mode does not change. The transmission is again enabled when TxDC becomes High.

LIN Transceivers

NCV7471(A) integrates two on−chip LIN transceivers − interfaces between physical LIN buses and the LIN protocol controllers compatible to LIN2.1 and J2602 specifications − consisting of a transmitter, receiver and wakeup detector. Each LIN transceiver can be connected to the bus line via LINx pin, and to the digital control through pins TxDLx and RxDLx. The functional mode of the LIN transceivers depends on the chip operating mode and on the status of the corresponding SPI bits − see Table 6, Table 7, and Figure 9. The LIN transceivers are supplied directly from the VS pin.

Table 6. LIN TRANSCEIVERS SPI CONTROL

SPI Control Bits x = 1 ... 2		LINx Transceiver Function in Operating Modes				
modLINx.1	modLINx.0	Power−up Reset	Start−up Normal Flash	Standby	Sleep	Fail−safe (except thermal shut−down)
0	0	LINx Off	LINx Off	LINx Off	LINx Off	LINx Wakeup
0	1	LINx Off	LINx Wakeup	LINx Wakeup	LINx Wakeup	LINx Wakeup
1	0	LINx Off	LINx Receive−only	LINx Receive−only	LINx Off	LINx Wakeup
1	1	LINx Off	LINx Normal	LINx Normal	LINx Off	LINx Wakeup

Table 7. LIN TRANSCEIVERS MODES

Mode	Transceiver	RxDLx Pin	TxDLx Pin	LINx Pin Bias
LINx Off	Fully off	High (if VOUT available)	Ignored	Pull−up current source to VS
LINx Wakeup	Wakeup detector active	Low if wakeup detected; High otherwise (if VOUT available)	Ignored	Pull−up current source to VS
LINx Receive−Only	Receiver active	Received data	Ignored	Pull−up current source to VS
LINx Normal	Transmitter and Receiver active	Received data	Data to transmit; checked for time−out (if enabled via SPI); transmitted if VS>*VS_MON*	30 kΩ pull−up

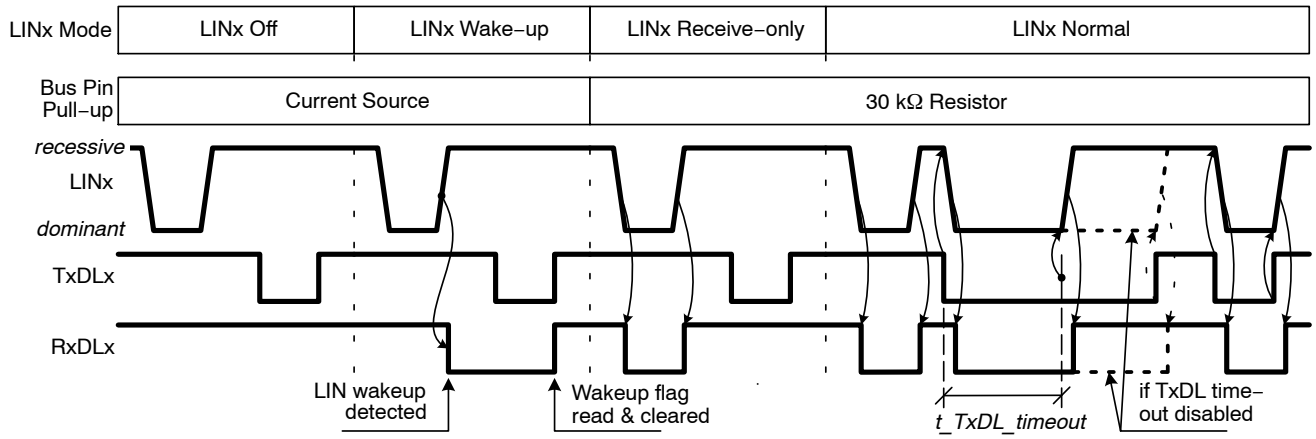

Figure 9. LIN Transceiver Modes

In **LINx Off** mode, the respective LIN transceiver is fully deactivated. Pin RxDLx stays High (as long as VOUT is provided) and logical level on TxDLx is ignored. The bus pin is internally pulled to VS with a current source (thus limiting VS consumption in case of a permanent LINx short to GND).

In **LINx Wakeup** mode, the LIN transceiver detects wakeups on the LIN line. A valid wakeup on the LIN bus corresponds to a dominant at least *t_LIN_wake* long, followed by a recessive. Thus the wakeup will not be detected in case of a permanent LIN short to GND, because a rising edge on LIN is necessary for the wakeup detection – see Figure 10.

In function of the current operating mode, a LIN wakeup can lead to an interrupt request or to a reset. A LIN wakeup is also indicated by a Low level on the corresponding RxDLx pin (which otherwise stays High as long as VOUT is available). Logical level on TxDLx pin is ignored; bus pin is internally pulled to VS with a current source.

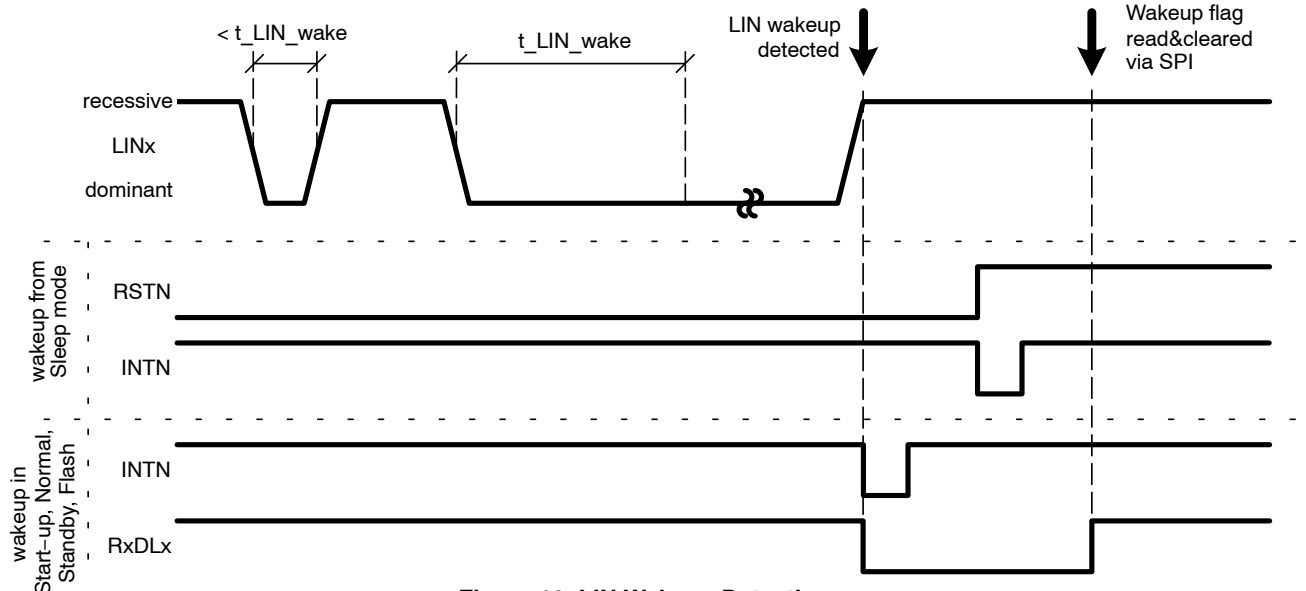

Figure 10. LIN Wakeup Detection

In **LINx Receive−Only** mode, the receiver part of the LINx block detects data on the bus with the normal speed and signals them on the RxDLx pin. Logical level on TxDLx pin is ignored; bus pin is internally pulled to VS with a current source.

In **LINx Normal** mode, the full LIN transceiver functionality is available. Both reception and transmission at the normal speed can be used. Received data are signaled via RxDLx pin, while logical level on TxDLx pin is translated into the corresponding bus level (TxDLx = High or Low leading to a recessive or dominant being transmitted, respectively). The LINx pin is internally pulled to VS via a 30 kΩ resistive path. TxDLx input signal is monitored with a time−out timer. If a dominant longer than *t_TxDL_timeout* is requested (i.e. TxDLx is Low for longer than *t_TxDL_timeout*), the transmission is internally disabled. The reception from the LINx bus remains functional and the internally set LINx transceiver mode does not change. The transmission is again enabled when TxDLx becomes High. The TxDL dominant time−out feature can be disabled via SPI (a common setting for both LIN blocks).

Transmission onto the bus is blocked if VS supply falls below *VS_MON* level. VS monitoring does not influence the LIN reception or the TxDLx time−out detection. Indication of the VS monitoring is accessible through SPI bit *statVS_LOW*.

For applications with lower required bit rates, the transmitted LIN signal slope can be decreased by a dedicated SPI setting (“LIN low−slope mode”).

WU − Local Wakeup Input

WU pin is a high−voltage input typically used to monitor an external contact or switch. A stable logical level of the WU signal is ensured even without an external connection:

- if the WU level is High for longer than *t_WU_filt*, an internal pull−up current source is connected to WU
- if the WU level stays Low for longer than *t_WU_filt*, an internal pull−down current source is connected to WU

The logical level on pin WU can be polled through SPI or used as a wakeup source:

- **WU Signal Polling:** in Start−up, Normal, Standby and Flash modes, the current WU logical level is directly reflected in SPI bit *statWU*, available for readout
- **WU Edge Detection / Wake−up:** by setting SPI bits *modWU.1* and *modWU.0*, edge detection is applied to WU signal. The device can be set to detect rising, falling or both edges on the WU signal. When the selected edge is detected, the event is latched in SPI bit *flagWakeWU*. In function of the current operating mode, edge on WU leads to an interrupt request (Start−up, Normal, Standby and Flash modes) or reset (Sleep mode). More details on the event handling, applicable also to WU edges, are given in the Event Flags and Interrupt Requests section.

Handling of the WU pin signal is illustrated in Figure 11.

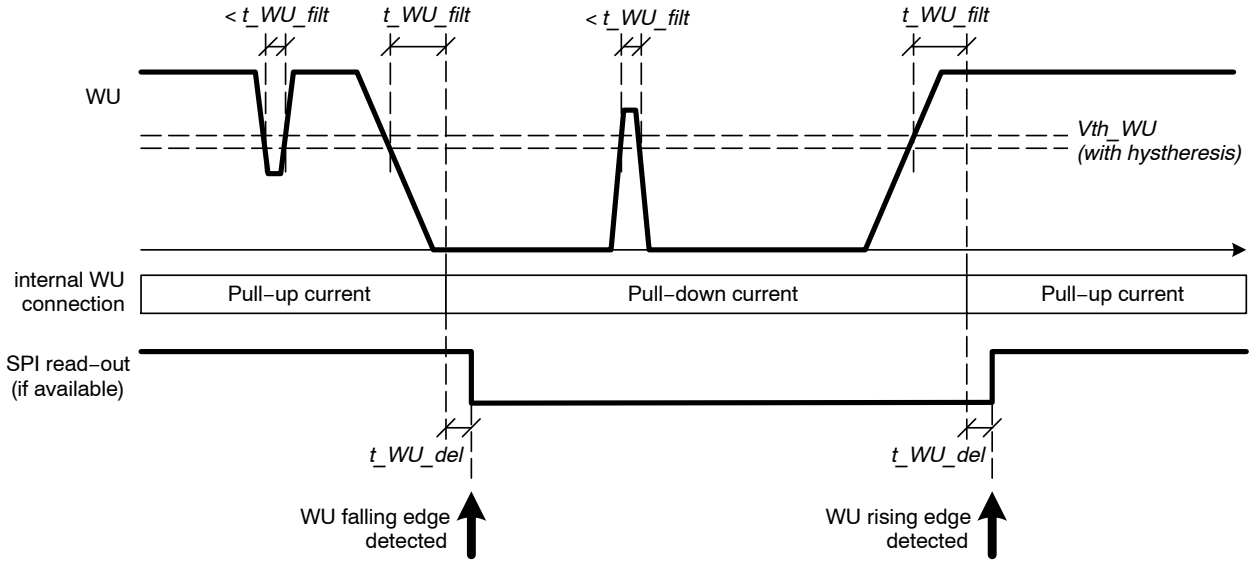

Figure 11. WU Pin Handling

Operating Modes

The principal operating modes of NCV7471(A) are shown in Figure 12 and described in the following paragraphs.

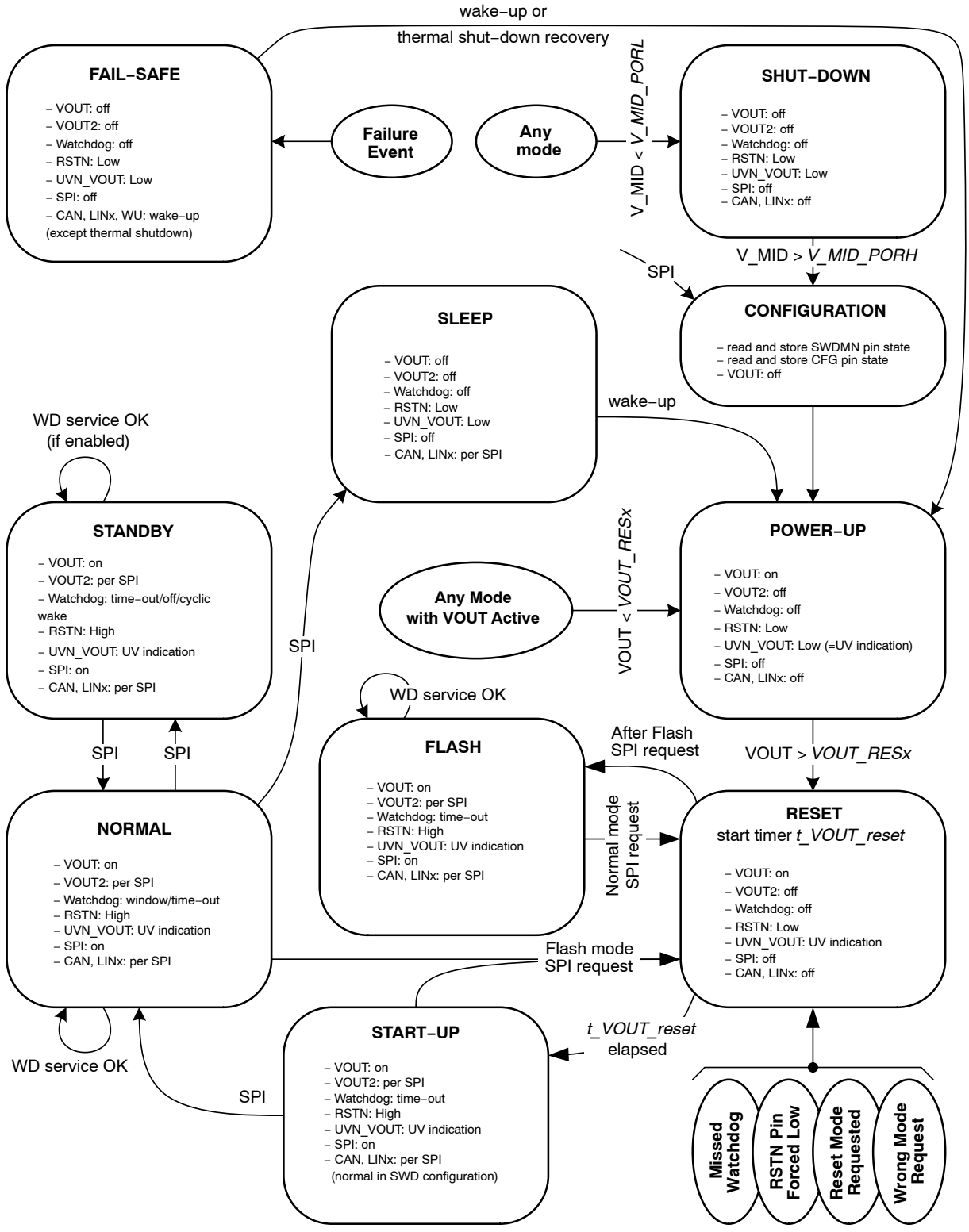

Figure 12. Operating Modes

Shut−Down Mode

The Shut−down mode is a passive state, in which all NCV7471(A) resources are inactive. The Shut−down mode provides a defined starting point for the circuit in case of supply under−voltage or the first supply connection.

Both on−chip power−supplies – VOUT and VOUT2 – are switched off and the CAN/LINx transceiver pins (CANH, CANL and LINx) remain passive so that they do not disturb the communication of other nodes connected to the buses. No wakeups can be detected. The SPI interface is disabled (SDO pin remains high−impedant). Pins RSTN and UVN_VOUT are forced Low – RSTN/UVN_VOUT Low level is guaranteed, when V_MID supply is above *V_MID_DigOut_Low* or VOUT pin is above *VOUT_DigOut_Low*. Pins RxDx are kept High (i.e. at VOUT level).

The Shut−down mode is entered asynchronously whenever the V_MID level falls below the power−on−reset level *V_MID_PORL*.

The Shut−down mode is left only when the V_MID supply exceeds the high power−on−reset level *V_MID_PORH*. When exiting the Shut−down mode, NCV7471(A) always enters the Configuration mode.

Configuration Mode

Configuration is a transient mode, in which NCV7471(A) reads logical input levels on pins SWDM and CFG. The SWDM and CFG values in Configuration mode define watchdog and fail−safe behavior of the chip, respectively. After leaving the Configuration mode, the device configuration can be changed neither by the SPI communication nor by signal modifications on the SWDM and CFG pins and is kept until the next V_MID under−voltage. The application software can also force Configuration mode by an SPI request from Start−up or Normal mode. Table 8 summarizes the available configurations and their characteristics. After reading both pins' levels, NCV7471(A) automatically transitions into the Power−up mode. Because the SMPS is off in Configuration mode, SPI−initiated transition from a functional mode to Configuration may result in a short dip on VOUT, which is not disturbing the device operation and which is recovered immediately after the Configuration mode is left.

CFG pin connection details can be found in the product's application note.

Two SPI bits are foreseen to reflect the state of SWDM and CFG pins:

- statSWDM bit latches the SWDM pin logical value read during Configuration mode. The bit remains unchanged until the Configuration mode is entered again.
- statCFG bit either latches the CFG value read in Configuration mode and remains unchanged afterwards (in Config 1,2,3,4), or keeps reflecting the current CFG signal throughout the IC operation (in SW Development).

Table 8. POSSIBLE CONFIGURATIONS ("X" Means "Don't care")

FastFSON SPI bit	Values Latched in Configuration Mode		Resulting Configuration	Behavior	
	SWDM	CFG		At Watchdog Failure	At RSTN Clamped Low
1	0	1	Config 1	1st failure activates FSOx; Fail−safe mode not entered	FSOx activated; external reset controls the operating mode
1	0	0	Config 2	1st failure puts the chip into Fail−safe mode	FSOx activated; Fail−safe mode entered
0	0	1	Config 3	2nd failure activates FSOx; Fail−safe mode not entered	FSOx activated; external reset controls the operating mode
0	0	0	Config 4	2nd failure activates FSOx and puts the chip into Fail−safe mode	FSOx activated; Fail−safe mode entered
X	1	X	SW Development	No FSOx activation; no Fail−safe mode entry; stored in SPI, can lead to interrupt (if enabled)	External reset controls the operating mode; no FSOx activation

Power−Up Mode

The Power−up mode ensures correct activation of the on−chip VOUT DC/DC converter or recovery of VOUT after an under−voltage event.

In the Power−up mode, the VOUT DC/DC converter is switched on (or kept on) while VOUT2 regulator remains in the previous state (e.g. VOUT2 is off coming from the Shut−down and Configuration modes). The CAN/LINx transceiver pins (CANH, CANL and LINx) remain passive so that they do not disturb the communication of other nodes connected to the buses. No wakeups can be detected. The SPI interface is disabled (SDO pin remains high−impedant). Pins RSTN and UVN_VOUT are forced Low. Pins RxDx are kept High (i.e. at VOUT level).

The Power−up mode is entered from the Configuration mode or after a wakeup from Sleep mode (in both cases, VOUT DC/DC converter needs to be activated). It will be also entered from any state with VOUT already active (Normal, Standby, Reset, Start−up, Flash) if the VOUT level falls below the *VOUT_RESx* level (the valid *VOUT_RESx* level is set via SPI).

The Power−up mode is correctly left when VOUT exceeds the SPI−selected *VOUT_RESx* level. An overload/short−circuit failure is detected if VOUT does not reach the failure threshold *VOUT_FAIL* within time *t_VOUT_powerup*. NCV7471(A) then goes to the Fail−safe mode. VOUT staying between *VOUT_FAIL* and *VOUT_RESx* levels will keep the device in the Power−up mode, unless the thermal shutdown temperature is reached (e.g. because of VOUT overload).

Reset Mode

The Reset mode is a transient mode providing a defined RSTN pulse for the application microcontroller.

VOUT supply is kept on, while VOUT2 regulator remains in its previous state. The CAN/LINx transceiver pins (CANH, CANL and LINx) are passive so that they do not disturb the communication of other nodes connected to the buses. No wakeups can be detected. The SPI interface is disabled (SDO pin remains high−impedant). Pin RSTN is forced Low while pin UVN_VOUT indicates the VOUT under−voltage with respect to the highest reset level. Pins RxDx are kept High (i.e. at VOUT level).

Reset mode will be entered as a consequence of one of the following events:

- Power−up mode is exited
- RSTN pin is forced Low externally
- Flash mode has been requested via SPI
- Flash mode exit has been requested via SPI
- Reset mode has been requested via SPI
- An un−authorized operating mode has been requested via SPI
- Watchdog has been missed in Config 1 or Config 3

Normally, the Reset mode is left after a defined time *t_VOUT_reset* when the RSTN pin is internally released to High – the chip then goes to the Start−up mode. Overdriving the RSTN pin to Low externally will extend the Reset mode duration. If RSTN is still forced Low externally even after time *t_VOUT_Clamped_Low* elapses, a “RSTN clamped Low” event is detected. The reaction depends on the chip configuration (SW Development or Config 1/2/3/4). “RSTN clamped Low” can lead to FSOx signal activation, Fail−safe mode entry or just to the Reset mode being kept as long as RSTN is driven Low – see Table 9.

If the Reset mode is entered due to external RSTN Low pulse during Start−up mode, FSOx outputs are activated (unless the device is in the SW Development configuration). This condition fosters that the external MCU sends at least one correct watchdog message before applying an external reset.

Information about the cause of a reset pulse is stored in the SPI registers and can be read by the application software. The “Reset source” information is kept unchanged until the next reset event.

Start−Up Mode

During the Start−up mode, the microcontroller supplied by VOUT is expected to initialize correctly and to perform successful communication via the SPI interface.

Start−up mode is the first mode in which SPI is enabled and the watchdog is started. The application software is able to read any SPI register. Write access to SPI depends on the FSO_internal flag (i.e. whether a failure condition preceded the Start−up mode – see the FSO1/2/3 – Fail−safe Outputs section for details):

- In case FSO_internal = 0 (inactive), any SPI register can be written and all features can be configured in the Start−up mode (e.g. CAN/LIN transceivers can be activated, VOUT2 can be activated)
- In case FSO_internal = 1 (active), all SPI write frames will be ignored by the chip, with the exception of the watchdog service frame (write access to the MODE_CONTROL register).

The watchdog is activated and works in the timeout mode. A correct watchdog service is expected from the MCU before the watchdog period elapses. The correct watchdog−serving SPI message should arrive in time and should contain either a request to enter Normal mode or a request to enter the Flash mode. The Start−up mode is then exited into the requested mode.

If the microcontroller software fails to serve the watchdog in time, the chip detects the “1st Watchdog Missed” event which is handled according the configuration (SW Development or Config 1/2/3/4) – see the FSO1/2/3 – Fail−safe Outputs section.

In the SW Development configuration, the following exceptions are applied for the Start−up mode:

- the device remains in the Start−up mode as long as the watchdog is not served correctly – thus also in case no microprocessor is connected.
- when entering the Start−up mode, CAN and both LIN transceivers are automatically put to their Normal mode

As a result, device in SW Development mode keeps on providing VOUT supply and full CAN and LIN functionality even if no application software is available or if no microprocessor is connected. In addition, no RSTN pulses are generated and FSOx pins remain inactive.

Normal Mode

The Normal mode allows using all NCV7471(A) resources (VOUT2, CAN transceiver, LINx transceivers) which can be monitored and configured by the microcontroller via the SPI interface. The watchdog is working in the window mode with selectable period which can be changed at each watchdog−service SPI message.

VOUT is kept on. INTN pin provides the Interrupt Requests (IRQ’s) depending on the device status and the interrupt mask settings. The application software can poll all

SPI status bits or enable the corresponding interrupt requests. Pin RSTN remains High while pin UVN_VOUT indicates the VOUT under−voltage with respect to the highest reset level. WU pin and transceivers can be configured for wake−up recognition which is then signalled as an interrupt request.

In a software−controlled way, the microcontroller can either keep NCV7471(A) in the Normal mode or request a transition into another mode (including Reset and Configuration).

Standby Mode

Standby is the first low−power mode of NCV7471(A). It is entered after the corresponding SPI request is made in the Normal mode. In the Standby mode, the application microcontroller remains supplied by VOUT DC/DC converter and can continue the SPI communication. VOUT remains monitored by the reset and failure comparators. The functionality of the LINx blocks remains fully available while the CAN transceiver is limited – it can be put to Receive−only, Wakeup or Off mode. Active CAN transmission is not available.

Three types of wakeup can be used during the Standby mode – a local wakeup through the WU pin change, a bus wakeup (via a CAN or LINx bus) and a cyclic wakeup generated by the watchdog timer. A detected wakeup will cause an interrupt request through INTN pin.

During Standby mode, at least one of the following conditions must be fulfilled:

- Watchdog is requested to be on
- Cyclic wakeup is enabled
- CAN wakeup is enabled
- LIN wakeup is enabled at least on one of the LINx channels

If none of the above conditions is respected, all CAN and LIN wakeups will be automatically enabled as well as WU wakeup on both edges. Note, that allowing only the local WU wakeup is not sufficient for successful Standby mode entry without watchdog. This SPI setting condition is monitored and fostered throughout the Standby mode duration.

Standby will be kept as long as the microcontroller can correctly serve the watchdog and the interrupts according the SPI settings. Standby is left either by an SPI request for a mode change or by a reset event.

Sleep Mode

Sleep mode is the second low−power mode of NCV7471(A). The microcontroller is not supplied and most resources are inactive beside the blocks needed for wakeup detection.

Sleep mode can be entered from Normal mode by the corresponding SPI request. Immediately after the Sleep mode entry, RSTN and UVN_VOUT pins are pulled Low in order to stop the microcontroller software. Both power supplies – VOUT and VOUT2 – are switched off; SPI and watchdog are de−activated. Depending on the SPI settings prior to the Sleep mode entry, CAN and LINx transceivers can be either switched off or configured for bus wakeup detection.

Two types of wakeup can be used during the Sleep mode – a local wakeup through the WU pin change, and a bus wakeup (via a CAN or LINx bus). A detected wakeup will cause entry into Power−up mode.

When Sleep mode is requested, at least one of the following conditions must be fulfilled:

- CAN wakeup is enabled
- LIN wakeup is enabled at least on one of the LINx channels

If none of the above conditions is respected, all CAN and LIN wakeups will be automatically enabled as well as WU wakeup on both edges. Note, that allowing only the local WU wakeup is not sufficient. Sleep mode can be only left through a wakeup or V_MID under−voltage.

Fail−Safe Mode

Fail−safe mode ensures a defined reaction of NCV7471(A) to a failure event. Both power supplies – VOUT and VOUT2 – are switched off, and the Fail−safe outputs are activated. RSTN and UVN_VOUT pins are pulled Low in order to ensure that the microcontroller software execution stops immediately.

Fail−safe mode will be entered as a consequence of one of the following events:

- Watchdog has been missed in Config 2 or Config 4
- “RSTN clamped Low” has been detected in Config 2 or Config 4
- “RSTN clamped High” has been detected
- VOUT power supply has not reached the failure level VOUT_FAIL after *t_VOUT_powerup* – this situation can be encountered during failed chip start−up or during too long and deep under−voltage
- Fail−safe mode has been requested via SPI (in SW Development only)
- Thermal shut−down has been encountered

All CAN and LINx transceivers are automatically configured to wakeup detection; wakeup from WU pin is also enabled on both edges. A detected bus or WU wakeup will bring NCV7471(A) into Power−up mode. Only in case of a thermal shut−down, no wakeups are detected and the Fail−safe mode is exited as soon as the junction temperature decreases below the warning level.

Throughout the Fail−safe mode, some SPI settings and status bits are preserved, and become effective after Fail−safe mode recovery. Namely CONTROL2 register (with SMPS mode settings and VOUT reset level settings), STATUS1 register (with wake−up flags and FSO flags) and GENERAL PURPOSE register are not reset when Fail−safe is entered, and keep their previous content. Fail−safe

recovery is therefore different compared to wakeup from Sleep mode, after which CONTROL2 is reset.

Flash Mode

Flash mode offers a relaxed watchdog timing enabling transfer of bigger amounts of data between the microcontroller software and, e.g., an external programmer connected to a CAN or LIN bus. The watchdog is running in time−out mode and its period can be selected from the full range of available values including longer times compared to Normal mode. The control of other resources – power supplies, transceivers, WU pin, interrupt requests, etc. – remains identical to Normal mode.

Flash mode can be entered by a specific SPI request in Start−up or Normal mode. The entry into Flash is accompanied by a reset pulse with “Flash requested” flag. Similarly, Flash mode can be left by an SPI request which will result in a reset pulse with “Flash exit requested” flag. Reset−source information in the SPI flags then allows the application to branch in function of the Flash mode. The handling of Flash mode requests is shown in Figure 13.

In SW Development configuration, CAN and both LIN transceivers are automatically put to their Normal mode when the device enters Flash operating mode.

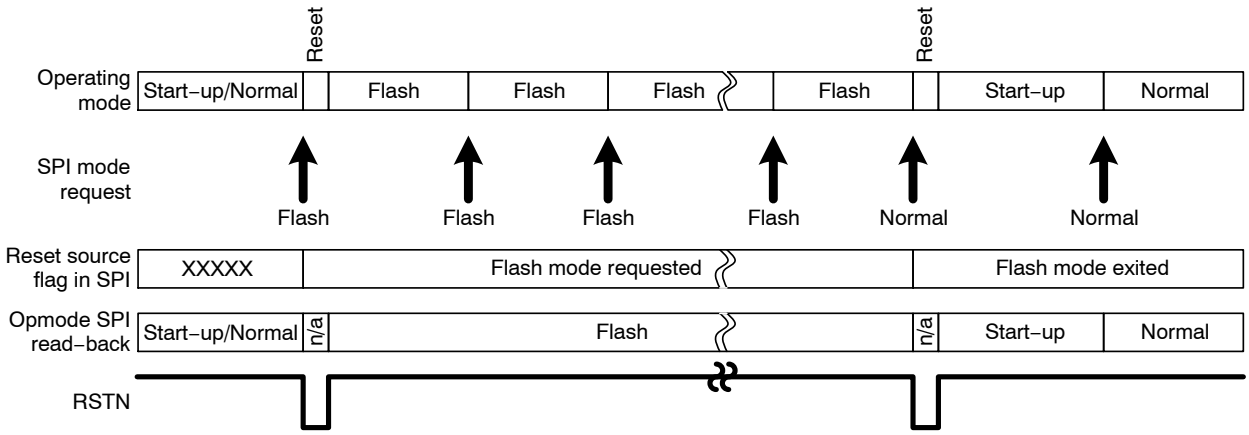

Figure 13. Flash Mode Sequence

Watchdog

The NCV7471(A) watchdog timer monitors the correct function of the application software – the microcontroller is required to send correct and timely watchdog−service (or “WD trigger”) SPI messages. A failure in the watchdog service is handled in function of the chip’s configuration (see the Configuration Mode section): it leads to a reset, to the Fail−safe mode entry or – in the SW Development configuration – generates an interrupt event (maskable).

The available modes of the watchdog timer are shown in Figure 14, with the watchdog period specified in Figure 15:

- **Time−out mode watchdog:** the microcontroller is expected to send the watchdog−service SPI message any time before the watchdog period elapses. The time−out watchdog mode is automatically used during Start−up and Flash modes. It can be used in Standby and Normal modes. In Standby and Flash modes, the watchdog period can be selected from a broader range of values compared to the Normal mode.
- **Window mode watchdog:** the microcontroller must send the required SPI message during an “open window” – this window is situated between 50% and 100% of the watchdog period. A watchdog−service SPI message sent before or after the open window is treated as a watchdog failure. The window watchdog can be used during the Normal mode.
- **Off:** the watchdog will be inactive by default in Shut−down, Configuration, Power−up, Reset, and Fail−safe modes. It can be requested to be off in the Standby mode.
- **Timer Wakeup:** in the Standby mode, the watchdog timer can be configured to generate wakeup events. In the Standby mode an interrupt request will be generated with a period defined by the watchdog setting.

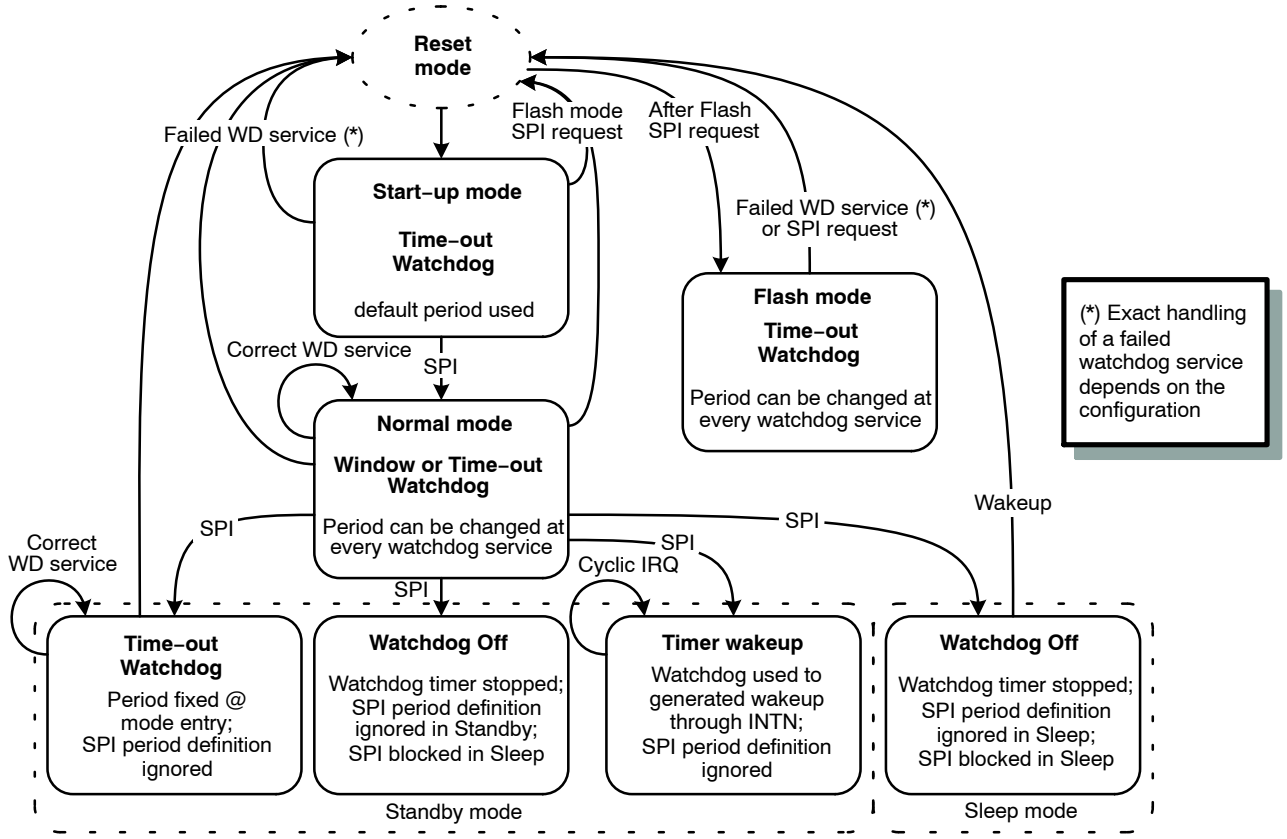

Figure 14. Watchdog Modes

A watchdog−service corresponds to a write access to SPI CONTROL0 register, containing watchdog mode, watchdog period and operating mode settings. The CSN rising edge of the CONTROL0 SPI write access is considered as the watchdog trigger moment. The watchdog service is evaluated as successful if all below conditions are fulfilled:

- The write SPI frame is valid
- The watchdog trigger moment falls into the correct watchdog trigger interval (see Figure 15) – in the case of the time−out watchdog, it arrives before the watchdog period expires; in the case of the window watchdog, it arrives during the second half of the window interval. In both cases, tolerance of the watchdog timing parameters shall be taken into account.
- The requested watchdog mode and the requested operating mode form an allowed combination

The watchdog period value written during a successful watchdog service is immediately used during the subsequent operation.

In the SW Development configuration, a failed watchdog service does not lead either to Reset or to Fail−safe mode:

- A failed WD service event is stored into the corresponding SPI register
- If the event is not masked, an interrupt request is generated.
- If a time−out watchdog is missed in the Start−up operating mode, Start−up mode is kept, and the watchdog is restarted with the default time−out period.
- If a too early window WD service is encountered in the Normal mode, a new watchdog period will be immediately started with the newly written settings; Normal mode is preserved
- If a window−watchdog is missed in the Normal mode (no service arrives), a new watchdog period will be immediately started with the current settings; Normal mode is preserved
- If a time−out watchdog is missed in the Standby mode, a new time−out watchdog period is immediately started with the same period; Standby mode is preserved

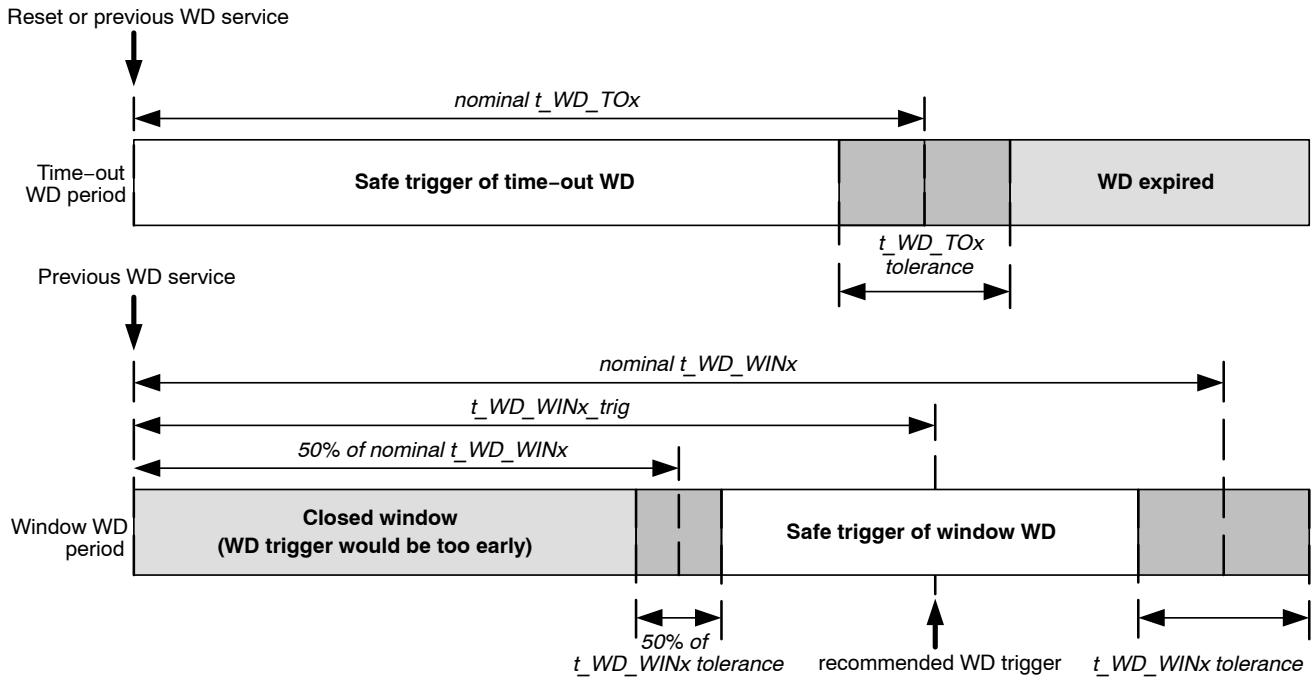

Figure 15. Structure of the Time−out and Window Watchdog Period

System Reset

A reset to the application microcontroller is signaled by Low level on the RSTN pin. RSTN pin is a bidirectional digital pin using an open−drain output structure with an internal pull−up resistor. An external reset source can overrule the High level generated by NCV7471(A) on RSTN pin. The RSTN logical level is then a superposition of the internally and externally driven reset request.

The RSTN pin level is compared with the internally driven RSTN signal – the comparison is used to control the operating mode of the circuit and to monitor a clamped condition of the RSTN pin – see Table 9.

With the exception of the SW Development configuration, applying an external reset during the Start−up mode will result in the FSO outputs activation. This condition fosters that the external MCU sends at least one correct watchdog message before applying an external reset.

Table 9. RSTN PIN FUNCTION (“X” Means “Don’t Care”)

	RSTN				
	internally driven	sensed at the pin	Configuration	Mode	Action
RSTN pin follows internal drive	Low	Low	X	X	Follow normal state diagram
	High	High	X	X	Follow normal state diagram
RSTN pin clamped High	Low	High	X	Configuration, Power−up, Reset, Sleep	Go to Fail−safe after *t_RSTN_ClampedHigh*
RSTN pin clamped Low	High	Low	X	Normal, Standby, Flash	Go to Reset mode after *t_RSTN_filt*
			Config 1, 2, 3, 4	Start−up	Go to Reset mode after *t_RSTN_filt;* activate FSO
			SW Development	Start−up	Go to Reset mode after *t_RSTN_filt;* do **NOT** activate FSOx
			Config 1 and 3	Trying to exit Reset mode	Keep Reset mode; activate FSOx after *t_RSTN_ClampedLow*
			Config 2 and 4	Trying to exit Reset mode	Keep Reset mode Go to Fail−safe after *t_RSTN_ClampedLow*
			SW Development	Trying to exit Reset mode	Keep Reset mode do **NOT** go to Fail−safe do **NOT** activate FSOx

Event Flags and Interrupt Requests

An interrupt request can be signaled by the NCV7471(A) to the attached microcontroller via the open−drain output pin INTN. The active level of the INTN pin is logical Low. Pin INTN is provided with an internal pull−up resistor. An additional external pull−up is recommended − see Figure 2. The interrupt request generation is available during the Start−up, Normal, Standby and Flash modes.

The following events are handled by the interrupt sub−system:

- CAN, LIN and WU wakeups (cannot be masked)
- Timer wakeup in Standby mode (cannot be masked)
- VOUT2 supply crossing the under−voltage level in either direction if VOUT2 is on
- VOUT2 supply crossing the over−voltage level in either direction
- TxD dominant time−out for CAN or LINx (valid only if the respective transceiver is configured in its normal mode)
- The junction temperature crosses the thermal warning level in either direction
- Internal DC/DC converter signals changing their status − these events indicate entering or leaving limit conditions for both stages of the converter (run−state of the boost, overload of the boost or buck, out−of−regulation state of buck)
- Watchdog missed in SW Development configuration

If an event is encountered, it always causes the corresponding SPI flag go High. If the event is masked by the SPI interrupt mask setting (the corresponding mask bit is Low), pin INTN will not be forced Low and no interrupt request will be issued. The interrupt flag remains available for later readout until the next read−and−clear access through the SPI interface. TxD dominant time−out flags will remain set even after a read&clear access if the excessively long dominant signal is still present on the corresponding TxD pin. Note, that wakeup events cannot be masked. An overview of event flags is given in Table 10.

In case an un−masked interrupt event takes place, not only the corresponding event flag is set High, but also INTN pin is driven Low for *t_INTN_active*, indicating an interrupt request to the microcontroller. The microcontroller software is expected to read and clear the interrupt status register, otherwise the interrupt request remains pending (with the exception of flagRES_SWD). Pending or new interrupt requests will lead to a new INTN Low pulse no sooner than *t_INTN_inactive* after the previous pulse. In this way, it is ensured that multiple new or pending interrupts will not slow−down the execution of the application software. Control of the INTN pin in conjunction with the internal flags is illustrated in Figure 16.

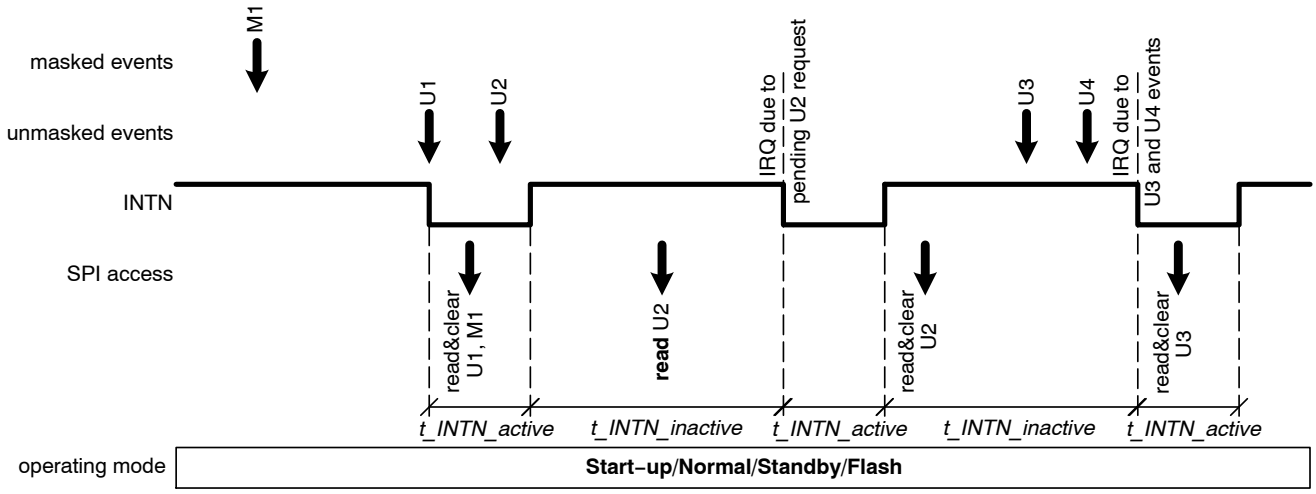

Figure 16. Interrupt Request Handling in Start−up, Normal, Standby and Flash Modes

In order to prevent that a pending interrupt request gets ignored by the application software, NCV7471(A) offers the following mechanisms:

- All event flags are preserved when transitioning from Start−up to Normal mode − see Figure 17.
- All event flags are preserved when transitioning from Standby to Normal mode − see Figure 17.
- All event flags are preserved when transitioning from Normal to Standby mode. If Standby mode is requested while an un−masked interrupt is pending, a new interrupt request is issued according the *t_INTN_inactive* timing − see Figure 18.
- If Sleep mode is requested while a wakeup flag is pending, the chip immediately performs a “wakeup from Sleep” mode sequence − see Figure 19. In this way, the information on the pending wakeup is not missed by the application.

Any transition through the Reset mode erases all SPI event flags, except the wakeup flags, and sets all maskable events to masked (i.e. not causing an interrupt request).

Table 10. EVENT FLAGS SUMMARY

	Event Flag Bit	Related Status Bit (Note 1)	Related Interrupt Mask Bit	Set Condition	Reset Condition
TxDx Time−out	flagTO_TxDC	none	intenTO_TxDC	TxDx (Note 2) pin is kept Low for longer than the time−out period **and** corresponding transceiver in normal mode	read&clear access to register STATUS0 **and** {TxDx (Note 2) dominant time−out condition disappeared **or** transceiver mode other then “normal”}
	flagTO_TxDL1		intenTO_TxDL1		
	flagTO_TxDL2		intenTO_TxDL2		
SMPS	flagBUCK_NOREG	statBUCK_NOREG	intenBUCK_NOREG	BUCK SMPS stage enters or leaves range of no regulation (i.e. extreme switching duty cycle); indicates (in)ability to reach nominal VOUT	read&clear access to register STATUS0
	flagBUCK_OL	statBUCK_OL	intenBUCK_OL	BUCK SMPS stage enters or leaves over−load condition (i.e. current limitation encountered or disappeared)	
	flagBOOST_RUN	statBOOST_RUN	intenBOOST_RUN	BOOST SMPS stage changes activity − it starts or stops	
	flagBOOST_OL	statBOOST_OL	intenBOOST_OL	BOOST SMPS stage enters or leaves over−load condition (i.e. current limitation encountered or disappeared)	
	flagTWAR	statTWAR	intenTWAR	junction temperature crosses the warning level in either direction	
	flagRES_SWD (Note 4)	none	intenRES_SWD	incorrect watchdog service encountered **and** device in SW Development configuration	
VOUT2	flagVOUT2_UV	statVOUT2_UV	intenVOUT2_UV	VOUT2 under−voltage detector changes state in either direction **and** VOUT2 is switched on	
	flagVOUT2_OV	statVOUT2_OV	intenVOUT2_OV	VOUT2 over−voltage detector changes state in either direction	
	flagSPIFail (Note 5)	none	intenSPIFail	SPI frame failure occurs: − number of SPI clocks different from 0 or 16, or − SCK High when CSN changes state	
Wakeups	flagWakeWU	none	none	WU wakeup detected (Note 3)	Read&clear access to register STATUS1
	flagWakeCAN			CAN wakeup detected (Note 3)	
	flagWakeLIN1			LIN1 wakeup detected (Note 3)	
	flagWakeLIN2			LIN2 wakeup detected (Note 3)	
	flagWakeTimer			Timer wakeup detected (Note 3)	

1. When a related status bit exists, the event is linked to a change (in either direction) of the status bit. Even if the event flag is cleared, the corresponding status bit still indicates the current status of the observed feature and can be polled by SPI at any time.
2. “x” = “C”, “L1 or “L2”. In case of LIN transceivers, the time−out feature can be enabled/disabled by SPI.
3. The respective wakeup source must be enabled through the corresponding control SPI register − timer wakeup in CONTROL0; CAN, LIN1/2 and WU wakeups in CONTROL1
4. For a missed WD in SW Development, INTN pulse is generated only once per event − it is not repeated even if the corresponding flag is still set. New INTN pulse occurs only if WD is missed again in SW Development.
5. During VOUT power−up (e.g. when going from Shut−down mode, or when waking−up from Sleep or Fail−safe mode), flagSPIFail can be set because of transient toggling of internal CSN and SCK signals. It is therefore recommended to ignore flagSPIFail immediately after VOUT power−up, until the STATUS0 register is reset. Except flagSPIFail, the remaining SPI register content is not influenced by the possible internal toggling of CSN and SCK signals during power−up.

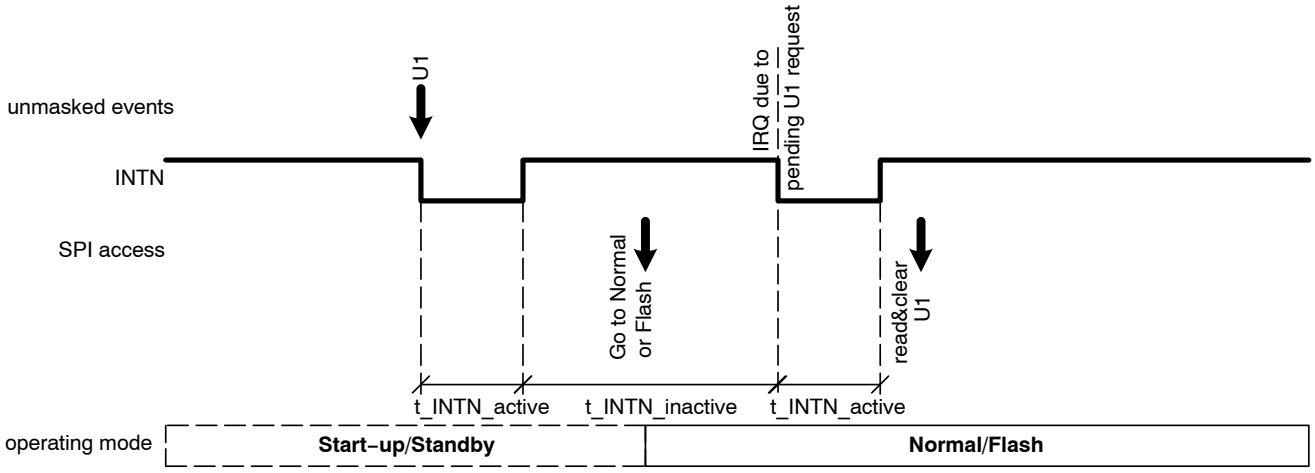

Figure 17. Interrupt Request Handling during a Transition to Normal Mode

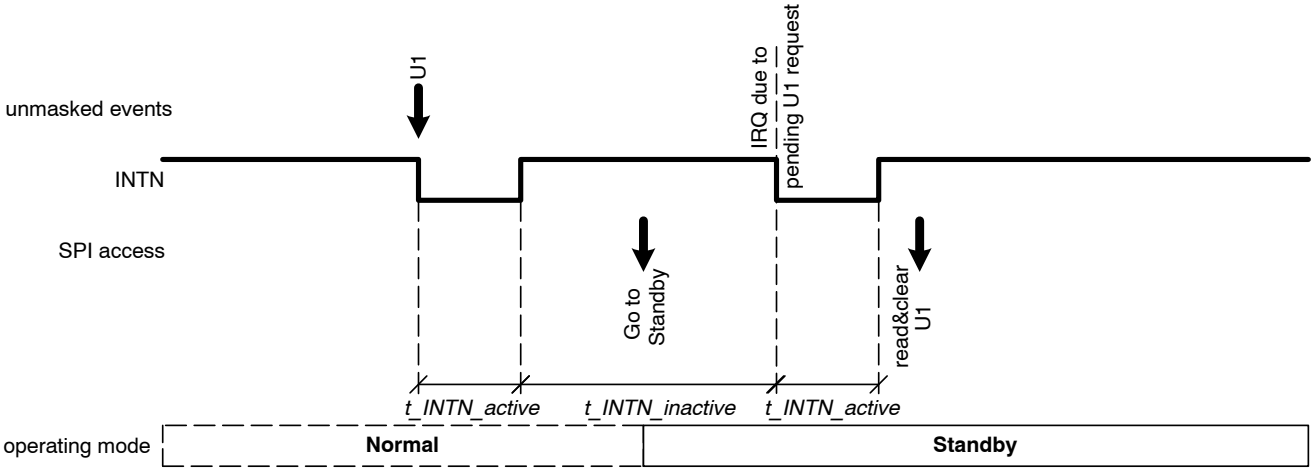

Figure 18. Transition to Standby Mode with a Pending Interrupt Request

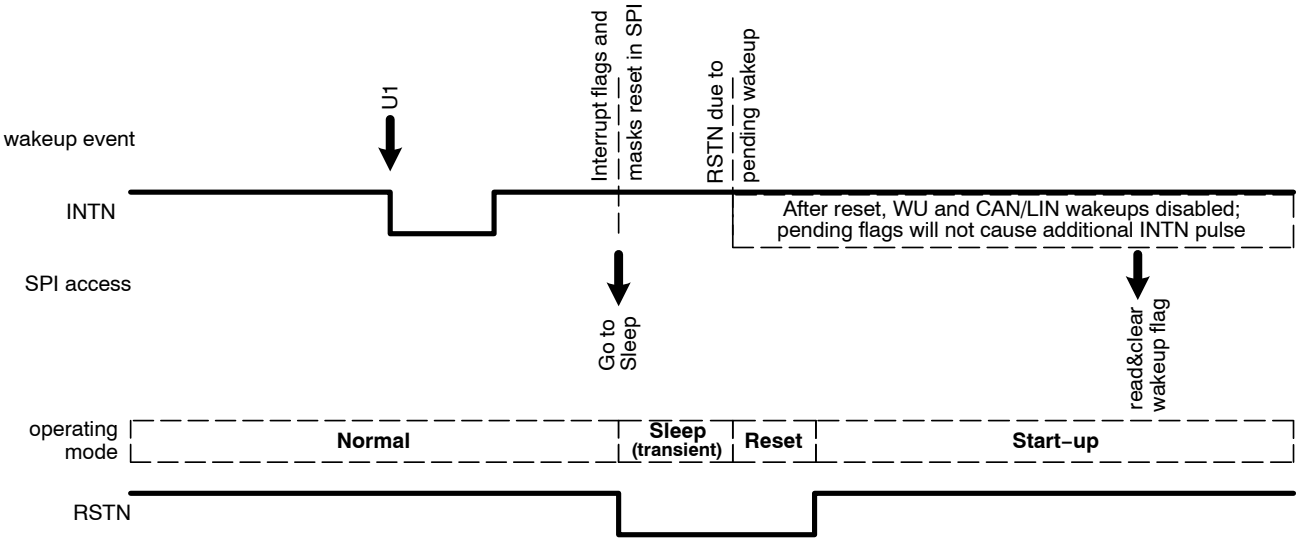

Figure 19. Attempted Transition to Sleep Mode with a Pending Wakeup Flag

Junction Temperature Monitoring

The device junction temperature is monitored in order to avoid permanent degradation or damage of the chip. Two distinct junction temperature thresholds are used:

- Thermal warning level *Tj_WAR*. The status of the current junction temperature compared with the Tj_WAR threshold is available in the corresponding SPI status register. A change of the junction temperature across the warning threshold in either direction sets the SPI bit flagTWAR. If not masked, an interrupt request can be generated in order to signal to the application that the junction temperature exceeded or cooled below the warning level.
- Thermal shut−down level *Tj_SD*. Junction temperature exceeding the shut−down level puts the chip into Fail−safe mode. In this specific case, no wakeups are detected in the Fail−safe mode; the mode is automatically left only when the junction cools down below the warning level, thus providing a thermal margin for the application software to cope with the event.

The junction temperature monitoring circuit is active in all operating modes with VOUT supply switched on (Power−up, Reset, Start−up, Standby, Flash) and also in the Fail−safe, provided that it has been entered as the consequence of a thermal shut−down. The function of the junction temperature monitoring of NCV7471(A) is shown in Figure 20.

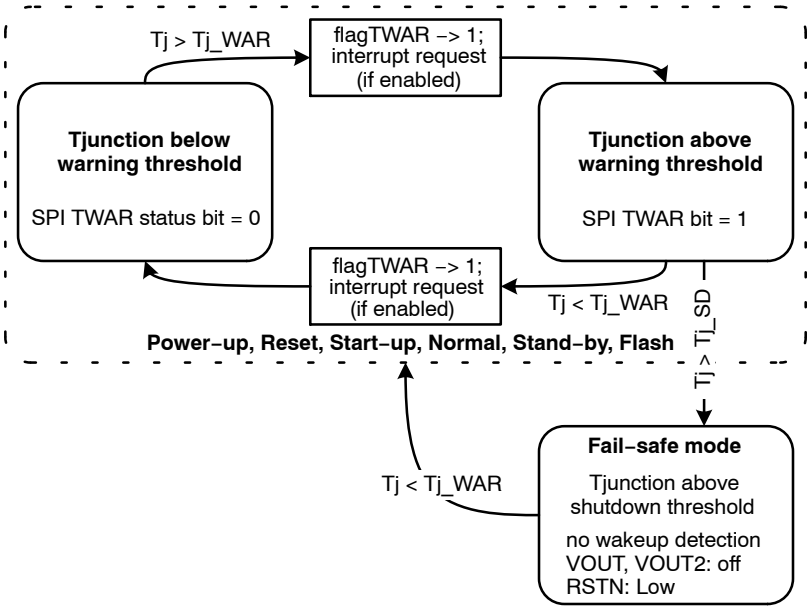

Figure 20. Junction Temperature Monitoring

FSO1/2/3 – Fail−Safe Outputs

NCV7471(A) offers three digital outputs dedicated to control a fail−safe circuitry in the application under specific failure conditions. All three outputs are high−voltage low−side open drain drivers simultaneously activated by a common internal signal FSO_internal and providing different behavior:

- FSO1 is constantly pulled Low if FSO_internal is active
- FSO2 provides 50% rectangular signal with 1.25 Hz frequency
- FSO3 provides 20% rectangular signal with 100 Hz frequency

Figure 21 illustrates the FSOx pins function with respect to the internal FSO_internal signal.

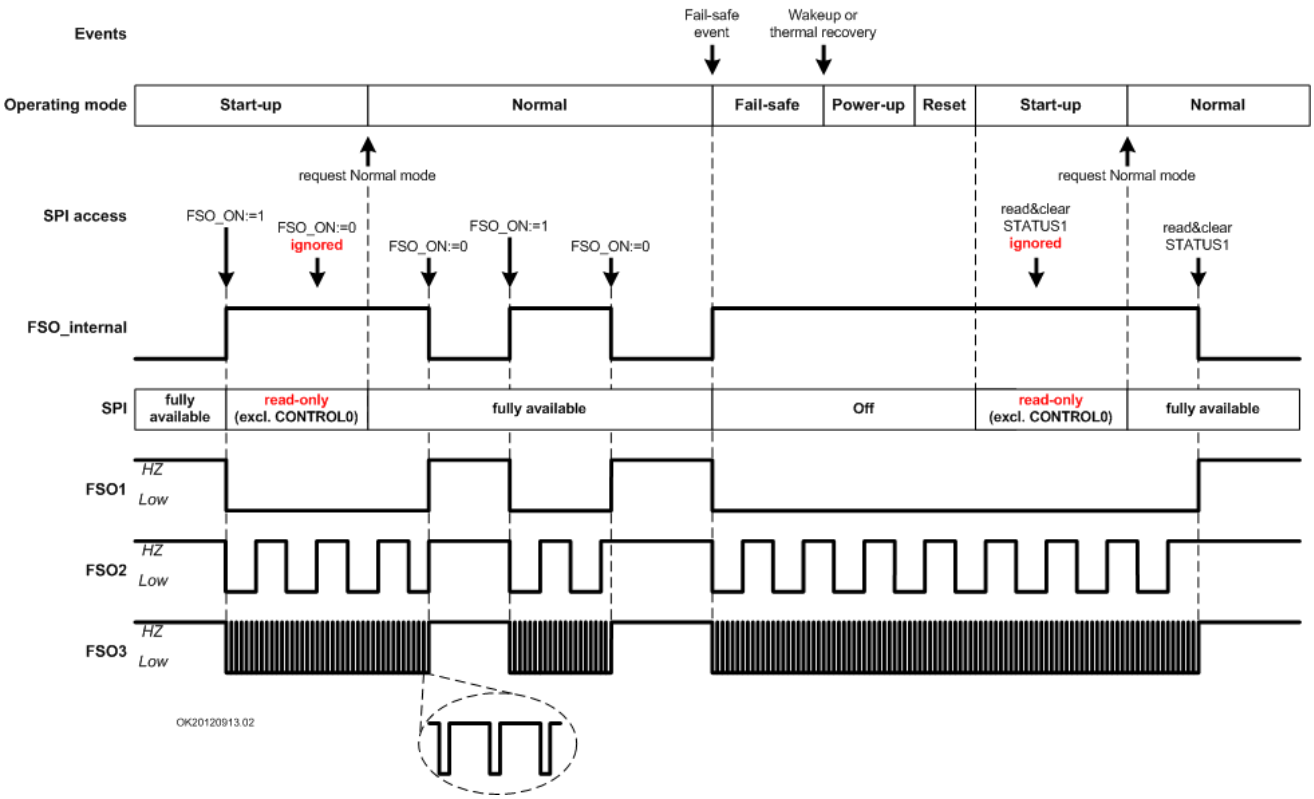

Figure 21. Operation of FSOx Pins

FSO_internal is set to High as soon as a failure condition is recognized or as soon as an SPI command is given to activate FSO. Overview of situations leading to FSO_internal activation is given in Table 11. The handling of the different failure conditions depends on the chip configuration (see the Configuration Mode section) – specifically in the SW development configuration, the watchdog−related failures and “RSTN clamped Low” failure do not lead either to the FSO_internal activation or to the Fail−safe mode entry.

FSO_internal signal will be reset (and the FSOx outputs are subsequently de−activated) under the following conditions:

- If FSO_internal was set by setting the FSO_ON SPI bit, it will be reset by writing “0” to FSO_ON SPI bit
- If FSO_internal was set because of a failure condition, a read−and−clear access to the flagFSO SPI status bits will reset it.

In Start−up mode, FSO_internal High level limits SPI functionality – no register can be written or read&cleared with the exception of CONTROL0 register. Attempts to perform a write or read&clear access to other registers will be ignored – including attempts to reset bit FSO_ON or the flagFSO.x bits. This condition ensures that the application software performs at least one successful watchdog service after a failure occurs.

Table 11. CONDITIONS FOR ACTIVATION OF FSO_INTERNAL SIGNAL (“X” Means “Don’t Care”)

FSO Activation Event	Detected in Modes	Detected in Configurations	Fail−safe Mode Entered
Thermal Shutdown (Tj > Tjsd)	Power−up Reset Start−up Normal Standby Flash	all	yes
Fatal VOUT failure (*VOUT* < *VOUT_FAIL* for longer than *t_VOUT_powerup*)	Power−up entered from all the modes	all	yes
VOUT undervoltage (VOUT < VOUT_RESx for longer than t_VOUT_powerup) (NCV7471A only)	Power−up entered from Configuration, Sleep or Fail−safe	all	no
VOUT undervoltage (VOUT < VOUT_RESx for longer than t_VOUT_UV_filt) (NCV7471A only)	Power−up entered from Start−up, Normal, Standby, Flash	all	no
RSTN Clamped High	Reset	all	yes
External RSTN without previous WD service	Start−up	Config 1,2,3,4	no
RSTN Clamped Low	when trying to leave Reset	Config 1,3	no
		Config 2,4	yes
1st Watchdog Missed	Start−up Normal Flash Standby (if WD on)	Config 1	no
		Config 2	yes
2nd Watchdog Missed	Start−up Normal Flash Standby (if WD on)	Config 3	no
		Config 4	yes
SPI control bit FSO set	Start−up Normal Standby Flash	all	no

SWDM and CFG Digital Inputs

SWDM and CFG pins are high−voltage compliant digital inputs enabling NCV7471(A) flexibility with respect to the fail−safe behavior. Their logical value (compared to a low−voltage digital threshold) is sensed and latched exclusively in the Configuration operating mode – i.e. when the chip leaves the Shut−down mode. Subsequently, the latched values are not changed by any signal on SWDM or CFG pin or by any SPI communication.

Latched active level on SWDM pin (i.e. High input level in the Configuration mode) causes the chip to enter the SW development configuration regardless the state of CFG pin. When the latched SWDM value is inactive (i.e. Low in the Configuration mode), the latched CFG value then controls whether a failure condition (missed watchdog or RSTN clamped Low) results in the Fail−safe entry or only in a reset pulse generation. More details are given in the Configuration Mode and FSO1/2/3 – Fail−Safe Outputs sections.

SPI – Serial Peripheral Interface

SPI Frame Format

The Serial Peripheral Interface ensures control of NCV7471(A) operating modes, configuration of its functions and read−out of internal status and system information. The serial communication is achieved via SPI frames shown in Figure 22.

As long as the CSN chip select is High, the SCK and SDI inputs are not relevant and the SDO output is kept high−impedant. The signals on the SDI and SCK inputs are taken into account only when CSN chip select input is set to Low. Data incoming on pin SDI are then sampled at the falling edge of SCK clock signal; output data are shifted to pin SDO at the rising edge of SCK clock signal. Bits are transmitted MSB (most significant bit) first.

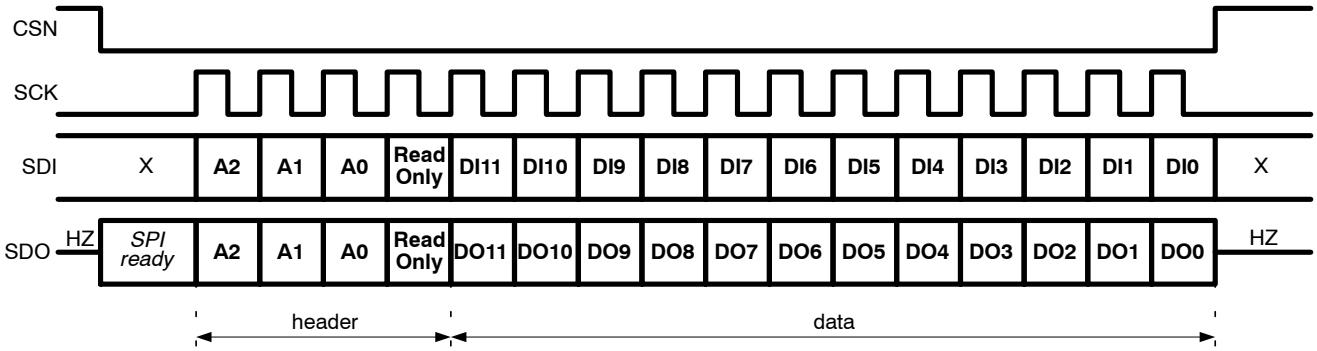

Figure 22. SPI Frame Format

One frame consists of exactly sixteen bits transferred from the microcontroller to NCV7471(A) through input pin SDI. The input bits are interpreted as follows:

- Immediately after CSN falling edge, SDO pin shows an internal “SPI ready” flag. Under normal conditions, when the inter−frame space is respected, the “SPI ready” flag is set to High and the device is available for SPI communication. If the SPI inter−frame space is violated, the previous SPI data might not be processed at the moment of the next CSN Low level; this situation is signaled by Low “SPI ready” flag. If the application software still attempts to perform SPI communication, incoming data will be completely ignored and the SDO signals “Low” throughout the SPI frame. The status of the flag is latched at the CSN falling edge – the application software might use short Low pulses on CSN (without SCK) in order to poll the flag.
- Four most significant bits form the header of the SPI frame. During the reception of the header bits, the SDI signal is looped back to the SDO pin starting with the first rising edge of SCK – except for the internal delay, signals SDO and SDI are equal during the header transmission. The header bits have the following function:
  - Bits A2, A1, and A0 form a 3−bit address of an internal SPI register. NCV7471(A) contains eight twelve−bit registers addressable by these three header bits.
  - Bit “ReadOnly” contains the “read−only” flag. If ReadOnly=High, the current SPI frame represents a read−only access to the SPI register. If ReadOnly=Low, then the current SPI frame represents either a write or read−and−clear access to an SPI register – the distinction between “write” and “read−and−clear” access depends on the specific register.
- Bits DI11−DI0 are the SPI data. In case of a read−only or read−and−clear access, these bits are ignored. In case of a write−frame, these bits are taken as the new SPI register content at the moment of the CSN rising edge (when the frame is considered finished). Regardless the access type, the output data DO11−DO0 represent the SPI register content as valid at the beginning of the SPI frame. The output bits are shifted−out at the rising edge of the SCK clock so that they can be sampled by the microcontroller at the SCK falling edge.

The following checks are performed on every SPI frame:

- The SCK clock input must be Low at both edges of the CSN chip select signal
- There must be exactly sixteen SCK clock cycles when CSN=Low (or no SCK edge if only the “SPI ready” flag is polled).

If any of the above conditions is not fulfilled, the SPI frame is considered incorrect and the “SPI Fail” event is internally generated.

SPI Register Mapping

Table 12. SPI REGISTERS MAPPING

Address			Register Name	Register Content												
A2	A1	A0		D11	D10	D9	D8	D7	D6	D5	D4	D3	D2	D1	D0	
0	0	0	CONTROL0	OPMODE.2	OPMODE.1	OPMODE.0	WD_MOD.1	WD_MOD.0	WD_PER.2	WD_PER.1	WD_PER.0	CHECKSUM	reserved	reserved	reserved	input
												RES_SRC.3	RES_SRC.2	RES_SRC.1	RES_SRC.0	output
0	0	1	CONTROL1	reserved	enVOUT2	modWU.1	modWU.0	modCAN.1	modCAN.0	enLIN_LSLP	disTO_TxDL	modLIN2.1	modLIN2.0	modLIN1.1	modLIN1.0	
0	1	0	CONTROL2	reserved	reserved	reserved	reserved	reserved	FSO_ON	FAST_FSO	VOUT_RES.1	VOUT_RES.0	modDCDC.1	modDCDC.0	enBOOST	
0	1	1	CONTROL3	intenTO_TxDC	intenTO_TxDL1	intenTO_TxDL2	intenBUCK_NOREG	intenBUCK_OL	intenBOOST_RUN	intenBOOST_OL	intenTWAR	intenRES_SWD	intenVOUT2_UV	intenVOUT2_OV	intenSPIFail	
1	0	0	STATUS0	flagTO_TxDC	flagTO_TxDL1	flagTO_TxDL2	flagBUCK_NOREG	flagBUCK_OL	flagBOOST_RUN	flagBOOST_OL	flagTWAR	flagRES_SWD	flagVOUT2_UV	flagVOUT2_OV	flagSPIFail	
1	0	1	STATUS1	reserved	reserved	reserved	flagFSO.3	flagFSO.2	flagFSO.1	flagFSO.0	flagWakeWU	flagWakeCAN	flagWakeLIN1	flagWakeLIN2	flagWakeTimer	
1	1	0	STATUS2	reserved	statVS_LOW	statBUCK_NOREG	statBUCK_OL	statBOOST_RUN	statBOOST_OL	statSWDM	statCFG	statWU	statTWAR	statVOUT2_UV	statVOUT2_OV	
1	1	1	GENERAL PURPOSE	GPD.11	GPD.10	GPD.9	GPD.8	GPD.7	GPD.6	GPD.5	GPD.4	GPD.3	GPD.2	GPD.1	GPD.0	

NOTE: “reserved” bits in input data are ignored; they are set to Low in output data.

Table 13. SPI REGISTERS INITIALIZATION

Address			Register Name	Initialization		ReadOnly bit	
A2	A1	A0		Initialized in (Note 6)	Initial content	Low (Note 7)	High
0	0	0	CONTROL0	Reset mode (except Flash mode entry)	Watchdog set to time−out @ 256 ms nominal	Mode and Watchdog settings (bits DI11−DI4) written into the register if checksum (bit DI3) is OK. Input bits DI2−DI0 ignored.	Input data ignored; current register content sent to SPI output
0	0	1	CONTROL1	Power−up mode	all bits Low (Note 9)	Bits DI11−DI0 written into the register	
				Reset mode	all bits Low (Note 9)		
0	1	0	CONTROL2	Configuration	all bits Low	Bits DI11−DI0 written into the register	
				Sleep	all bits Low		
0	1	1	CONTROL3	Reset mode	all bits Low	Bits DI11−DI0 written into the register	
1	0	0	STATUS0	Reset mode	all bits Low	read&clear access; all bits reset to Low (Note 8); input data ignored	
1	0	1	STATUS1	Configuration mode	all bits Low	read&clear access; all bits reset to Low; input data ignored	
1	1	0	STATUS2	n.a.	Reflects status of internal blocks	input data ignored	
1	1	1	GENERAL PURPOSE	Configuration mode	register filled with device ID data	Bits DI11−DI0 written into the register	

6. In modes not explicitly listed in “Initialized in” column, the register content is preserved
7. Regardless the access type (the “ReadOnly” bit), the current register content is always sent to the SPI output
8. Bits containing TxD dominant timeout flags will remain set if the excessively long dominant signal persists on the respective TxDx pin
9. Exception: in SW Development configuration, CONTROL1 bits modCAN.x, modLIN1.x and modLIN2.x are all set to “High”, corresponding to the default “Normal” mode of all transceivers

CONTROL0 Register (Address 000)

By a write access to the CONTROL0 register (“ReadOnly” = Low), the application software can control the operating mode of NCV7471(A) and the watchdog settings. A write access represents a watchdog service. An operating mode change is therefore always synchronized with the watchdog trigger message. In order to provide more safety to the mode control, the input data are protected with a check−sum (input bit DI3). The checksum must correspond to the following formula (symbol “⊕” denoting the exclusive−or operation):

DI3 = DI11 ⊕ DI10 ⊕ DI9 ⊕ DI8 ⊕ DI7 ⊕ DI6 ⊕ DI5 ⊕ DI4

In case of incorrect checksum in written data, the device reacts identically to a wrong opmode situation. During a read−only access to the CONTROL0 register (“ReadOnly” = High), the input data are completely ignored and no check is performed on them.

The output data of the CONTROL0 register – regardless the access type − indicate the current operating mode, the current watchdog settings and the cause of the last reset.

The initialization of the CONTROL0 register content is performed after every reset, when the watchdog type is fixed to time−out, and the watchdog period to nominally 256 ms.

Table 14. CONTROL0 REGISTER: OPMODE.x Encoding

OPMODE.2	OPMODE.1	OPMODE.0	OPMODE.x in Input Data					OPMODE.x in Output Data
			Requested Mode	Reaction in Start−up	Reaction in Normal	Reaction in Standby	Reaction in Flash	Current Mode
0	0	0	forbidden	“Wrong Opmode” Reset				Start−up
0	0	1	Normal	go to Normal	keep Normal	go to Normal	return from Flash via Reset and Start−up	Normal
0	1	0	Standby	“Wrong Opmode” Reset	go to Standby	keep Standby	“Wrong Opmode” Reset	Standby
0	1	1	Sleep	“Wrong Opmode” Reset	go to Sleep	“Wrong Opmode” Reset		not used
1	0	0	Flash	go to Flash via Reset	go to Flash via Reset	“Wrong Opmode” Reset	keep Flash	Flash
1	0	1	Fail−safe	in SW development configuration, go to Fail−safe; otherwise “Wrong Opmode” Reset				not used
1	1	0	Reset	go to Reset				not used
1	1	1	Configuration	go to Configuration	go to Configuration	“Wrong Opmode” Reset		not used

Table 15. CONTROL0 REGISTER: WD_MOD.x Encoding

WD_MOD.1	WD_MOD.0	Watchdog Timer Mode	Limitations (if not respected, the write access is considered as a missed watchdog)
0	0	Watchdog off	Can be used only with a Standby or a Sleep mode request
0	1	Window Watchdog	Can be used only for Normal mode request
1	0	Time−out Watchdog	Must be used with every Flash mode request; can be used with a Standby or Normal mode request; default in Start−up mode
1	1	Timer Wakeup	Can be used only with a Standby mode request

Table 16. CONTROL0 REGISTER: WD_PER.x Encoding

WD_PER.2	WD_PER.1	WD_PER.0	Watchdog Period	Nominal Duration	Note
0	0	0	WD_PER_0	8 ms	
0	0	1	WD_PER_1	16 ms	
0	1	0	WD_PER_2	32 ms	
0	1	1	WD_PER_3	64 ms	
1	0	0	WD_PER_4	128 ms	
1	0	1	WD_PER_5	256 ms	WD_PER_5 is automatically used in Start−up mode
1	1	0	WD_PER_6	512 ms	Can be used only for Standby and Flash modes (otherwise the watchdog SPI frame is considered wrong)
1	1	1	WD_PER_7	1024 ms	

Table 17. CONTROL0 REGISTER: RES_SRC.x Encoding

RES_SRC.3	RES_SRC.2	RES_SRC.1	RES_SRC.0	Cause of the Last RSTN Pulse	Reset Event Priority (Note 10)
0	0	0	0	V_MID under−voltage recovery (V_IN connection)	12
0	0	0	1	External reset outside Start−up mode (not accompanied by FSO activation)	10
0	0	1	0	Recovery from Fail−safe (through wakeup or thermal shutdown recovery)	8
0	0	1	1	Wakeup from Sleep	7
0	1	0	0	Flash mode requested	6
0	1	0	1	Flash mode exited	5
0	1	1	0	Reset mode requested	4
0	1	1	1	Configuration requested	3
1	0	0	0	Failed Watchdog (WD missed, wrong WD mode or period requested) − will not be used in SW Development configuration (Note 11)	2
1	0	0	1	Wrong operating mode requested; wrong checksum during write access to the Mode Control register	1
1	0	1	0	External reset in Start−up mode (accompanied by FSO activation if not in SW Development configuration)	9
1	0	1	1	reserved	−
1	1	0	0	reserved	−
1	1	0	1	reserved	−
1	1	1	0	reserved	−
1	1	1	1	VOUT under−voltage recovery	11

10. The “Reset Event Priority” reflects the order, in which the reset events are processed by the on−chip digital. In case more events occur simultaneously, the one with the lower priority number would be stored in CONTROL0 register.
11. WD period and WD mode settings are not checked in the following situations: Configuration mode request, Reset mode request, Flash exit (i.e. Normal mode request in the course of Flash mode)

CONTROL1 Register (Address 001)

CONTROL1 register defines the mode of individual CAN and LINx transceivers, of the VOUT2 regulator and the WU pin. The encoding of the CONTROL1 bits is defined in Table 18.

Table 18. CONTROL1 REGISTER ENCODING

enVOUT2		VOUT2 control
0		VOUT2 regulator is OFF
1		VOUT2 regulator is ON
modWU.1	**modWU.0**	**WU mode control**
0	0	WU wakeup detection disabled
0	1	WU monitored for falling edge
1	0	WU monitored for rising edge
1	1	WU monitored for both edges
modCAN.1	**modCAN.0**	**CAN transceiver mode**
0	0	CAN transceiver in Off mode
0	1	CAN transceiver in Wakeup mode
1	0	CAN transceiver in Receive−only mode
1	1	CAN transceiver in Normal mode
enLIN_LSLP		**LIN slope control – common for both LIN channels**
0		LIN transmission with normal bus signal slopes (according LIN2.1 specification)
1		LIN transmission with slow bus signal slopes (for limited bit−rate)
disTO_TxDL		**LIN dominant time−out control – common for both LIN channels**
0		Dominant time−out applied on TxDL pins
1		Dominant time−out not−applied on TxDL pins − unlimited dominant symbols can be transmitted
modLINx.1	**modLINx.0**	**LINx transceiver mode (x=1,2)**
0	0	LINx transceiver in Off mode
0	1	LINx transceiver in Wakeup mode
1	0	LINx transceiver in Receive−only mode
1	1	LINx transceiver in Normal mode

CONTROL1 register is initialized at every reset event with all−zeros content

CONTROL2 Register (Address 010)

Content of CONTROL2 register is defined in Table 19. The CONTROL2 register content is initialized to all−zeros content in the Configuration and Sleep modes.

Table 19. CONTROL2 REGISTER ENCODING

Bit		Definition
FSO_ON		If High, FSOx outputs are forced active
FAST_FSO		If High, already the 1st missed watchdog will be treated as a failure; the exact reaction depends on the configuration
VOUT_RES.1	**VOUT_RES.0**	**Selection of VOUT under−voltage threshold for RSTN Pin**
0	0	VOUT_RES4 threshold selected (the lowest threshold) for RSTN indication
0	1	VOUT_RES3 threshold selected for RSTN indication
1	0	VOUT_RES2 threshold selected for RSTN indication
1	1	VOUT_RES1 threshold selected for RSTN indication
modDCDC.1	**modDCDC.0**	**DCDC Converter mode selection**
0	0	DCDC Converter switching with fixed frequency
0	1	Converter switching frequency modulated with modulation depth dmod_DCDC_1
1	0	Converter switching frequency modulated with modulation depth dmod_DCDC_2
1	1	Converter switching frequency modulated with modulation depth dmod_DCDC_3
enBOOST		If High, BOOST (step−up) stage of the DCDC converter is enabled

CONTROL3 Register (Address 011)

The individual bits in the CONTROL3 register determine whether the corresponding interrupt event leads to an interrupt request via INTN pin or if it is only stored as a flag for later SPI retrieval. If the bit is High, the interrupt request is enabled. All bits of the CONTROL3 register are reset to Low at every reset event (i.e. all interrupt sources are disabled).

Table 20. CONTROL3 REGISTER ENCODING

Bit	Definition
intenTO_TxDC	Enables interrupt after dominant time−out on TxDC
intenTO_TxDL1	Enables interrupt after dominant time−out on TxDL1
intenTO_TxDL2	Enables interrupt after dominant time−out on TxDL2
intenBUCK_NOREG	Enables interrupt after a change of the internal converter signal indicating, that the buck stage cannot reach the output nominal voltage (typically due to too low line voltage)
intenBUCK_OL	Enables interrupt after a change of the internal converter signal indicating, that the buck stage is overloaded
intenBOOST_RUN	Enables interrupt when the boost stage is activated or de−activated − indicating a change in supply line conditions
intenBOOST_OL	Enables interrupt after a change of the internal converter signal indicating, that the boost stage is overloaded
intenTWAR	Enables interrupt when the junction temperature crosses the thermal warning level (in either direction)
intenRES_SWD	In SW Development configuration only − incorrect watchdog service will lead to an interrupt request (outside SW Development configuration, this event would lead to reset).
intenVOUT2_UV	Enables interrupt when VOUT2 crosses its under−voltage level (in either direction). Event registered only if VOUT2 is on.
intenVOUT2_OV	Enables interrupt when VOUT2 crosses its over−voltage level (in either direction).
intenSPIFail	Enables interrupt when an SPI frame failure is encountered

STATUS0 Register (Address 100)

STATUS0 bits latch information on individual events which can potentially lead to interrupt requests. All bits have their position corresponding to the CONTROL3 register bits. The details of the STATUS0 bits are given in Table 21.

A read−and−clear access to STATUS0 register is considered “interrupt service” for all pending interrupt requests. A read−only access does not change the flags and the active interrupt requests remain pending.

Specifically, flags corresponding to dominant time−outs can be cleared only when the respective time−out disappeared; otherwise, they will remain set even after read&clear access and, if enabled, the interrupt linked to them will remain pending.

STATUS0 register is reset to all−zeros content at every reset event.

Table 21. STATUS0 REGISTER ENCODING

Bit	Definition
flagTO_TxDC	TxDC dominant time−out occurred. The bit can be cleared only when the time−out condition disappeared (or when the CAN transceiver mode was changed to other than “CAN Normal”).
flagTO_TxDL1	TxDL1 dominant time−out occurred. The bit can be cleared only when the time−out condition disappeared (or when the LIN1 transceiver mode was changed to other than “LIN Normal”).
flagTO_TxDL2	TxDL2 dominant time−out occurred. The bit can be cleared only when the time−out condition disappeared (or when the LIN2 transceiver mode was changed to other than “LIN Normal”).
flagBUCK_NOREG	Flags a change of the internal converter signal indicating, that the buck stage cannot reach the output nominal voltage (typically due to too low line voltage)
flagBUCK_OL	Flags a change of the internal converter signal indicating, that the buck stage is overloaded
flagBOOST_RUN	Boost stage toggled its state (was activated or de−activated) − indicating a change in supply line conditions
flagBOOST_OL	Flags a change of the internal converter signal indicating, that the boost stage is overloaded
flagTWAR	Junction temperature crossed the thermal warning level (in either direction)
flagRES_SWD	In SW Development configuration only − incorrect watchdog service occurred
flagVOUT2_UV	VOUT2 crossed its under−voltage level (in either direction). Event registered only if VOUT2 is on.
flagVOUT2_OV	VOUT2 crossed its over−voltage level (in either direction).
flagSPIFail	SPI frame failure was encountered (Note 12)

12. During VOUT power−up (e.g. when going from Shut−down mode, or when waking−up from Sleep or Fail−safe mode), flagSPIFail can be set because of transient toggling of internal CSN and SCK signals. It is therefore recommended to ignore flagSPIFail immediately after VOUT power−up, until the STATUS0 register is reset. Except flagSPIFail, the remaining SPI register content is not influenced by the possible internal toggling of CSN and SCK signals during power−up.

STATUS1 Register (Address 101)

STATUS1 register contains flags for fail−safe events and wakeups. A specific bit (flag) is set High when the corresponding event was recognized and is set to Low only when the STATUS1 register is read and cleared. The STATUS1 register is initialized in Configuration mode to all−zeros content. It is not reset in Reset or Start−up mode in order to preserve the wakeup and failure flags coming from Sleep or Fail−safe mode. Encoding of the FSO−related flag bits is defined in Table 22.

Table 22. STATUS1 REGISTER: flagFSO.x Encoding

flagFSO.3	flagFSO.2	flagFSO.1	flagFSO.0	Failure event leading to FSOx activation
0	0	0	0	no failure, FSOx inactive (unless over−ruled by FSO_ON bit)
0	0	0	1	FSOx active due to missed watchdog; without entry into Fail−safe mode
0	0	1	0	FSOx active due to “RSTN clamped Low”; without entry into Fail−safe mode
0	0	1	1	FSOx active due to external reset in Start−up mode; without entry into Fail−safe mode (not detected in SW Development configuration)
0	1	0	0	reserved
0	1	0	1	reserved
0	1	1	0	reserved
0	1	1	1	reserved
1	0	0	0	FSOx active; coming from Fail−safe mode requested by SPI
1	0	0	1	FSOx active; coming from Fail−safe mode caused by missed watchdog
1	0	1	0	FSOx active; coming from Fail−safe mode caused by “RSTN clamped Low”
1	0	1	1	FSOx active; coming from Fail−safe mode caused by “RSTN clamped High”
1	1	0	0	FSOx active; coming from Fail−safe mode caused by thermal shutdown
1	1	0	1	FSOx active; coming from Fail−safe mode caused by VOUT undervoltage time−out (short−circuit detected) or FSOx active due to VOUT undervoltage (NCV7471A only)
1	1	1	0	reserved
1	1	1	1	reserved

Wakeup flag bits are summarized in Table 23. Detection of individual wakeup events is controlled by transceiver mode settings (for LIN and CAN wakeup), WU pin mode settings (for WU wakeup) and watchdog settings (for timer wakeup). A wakeup event is indicated either by an interrupt request (in Normal or Standby mode) or by a reset pulse (wakeups from Sleep mode). In Normal and Standby mode, a wakeup causes pending interrupt request until a read−and−clear access to STATUS1 register.

Table 23. STATUS1 REGISTER: Wakeup Flags

Bit	Definition
flagWakeWU	Wakeup on WU pin was detected (for non−zero setting of modWU.x SPI bits)
flagWakeCAN	Wakeup on CAN bus was detected (CAN transceiver in “CAN Wakeup” mode)
flagWakeLIN1	Wakeup on LIN1 bus was detected (LIN1 transceiver in “LIN Wakeup” mode)
flagWakeLIN2	Wakeup on LIN2 bus was detected (LIN2 transceiver in “LIN Wakeup” mode)
flagWakeTimer	Wakeup by timer (“Timer wakeup” selected through CONTROL0 register)

STATUS2 Register (Address 110)

STATUS2 register bits reflect the state of several internal blocks of the device. Read−and−clear or write access does not change the register content. The STATUS2 bits are defined in Table 24.

Table 24. STATUS2 REGISTER ENCODING

Bit	Definition
statVS_LOW	Indication of the VS monitoring output. If VS<*VS_MON*, then statVS_LOW = 1
statBUCK_NOREG	Indication of the buck DCDC stage not being able to reach the nominal VOUT voltage
statBUCK_OL	Indication of the buck DCDC stage overload
statBOOST_RUN	Indication that the boost DCDC stage is running (boost stage must be enabled and the input voltage requires step−up operation)
statBOOST_OL	Indication of the boost DCDC stage overload
statSWDM	Logical level of the SWDM pin latched during Configuration mode
statCFG	Logical level on the CFG pin latched during Configuration mode (in Config 1,2,3,4) **or** Current logical level on CFG pin (in SW Development)
statWU	Logical level on the WU pin
statTWAR	Output of the thermal warning comparator (if High, junction temperature is above the warning level)
statVOUT2_UV	Output of the VOUT2 under−voltage comparator (if High, VOUT2 is below the under−voltage level). Available only if VOUT2 regulator is on.
statVOUT2_OV	Output of the VOUT2 over−voltage comparator (if High, VOUT2 is above the over−voltage level)

GENERAL PURPOSE Register (Address 111)

General Purpose register allows storing general 12−bit information in the NCV7471(A) memory. The register is initialized only in Configuration mode, when a device version ID is loaded. Any data written to the register overwrite the initial content and are kept throughout the operation of the device until device enters Shut−down mode or until Configuration is requested.

The device ID is:

- 0x103 or 0x143 for NCV7471,
- 0x144 or 0x184 for NCV7471A.

Table 25. ABSOLUTE MAXIMUM RATINGS

Symbol	Parameter	Min	Max	Units
Vmax_VS	Maximum voltage at VS pin	−0.3	40	V
Vmax_VS_VOUT2	Maximum voltage at VS_VOUT2 pin	−0.3	40	V
Vmax_BOOST	Maximum voltage at BOOST pin	−0.3	V_MID+2	V
Vmax_V_MID	Maximum voltage at V_MID pin	−0.3	40	V
Vmax_BUCK	Maximum DC voltage at BUCK pin Maximum transient voltage on BUCK pin (Note 13)	−1 −3	V_MID+0.3	V
Vmax_VOUT	Maximum voltage at VOUT pin	−0.3	6	V
Vmax_VOUT2	Maximum voltage at VOUT2 pin	−1	40	V
Vmax_VCC_CAN	Maximum voltage at VCC_CAN pin	−0.3	6	V
Vmax_CANH, Vmax_CANL	Maximum voltage at CAN bus pins (0 < VCC_CAN < 5.25 V; no time limit)	−50	50	V
Vmax_LINx	Maximum voltage at LIN bus pins	−45	45	V
Vmax_FSOx	Maximum voltage at FSOx pins	−0.3	40	V
Vmax_WU	Maximum voltage at WU pin	−40	40	V
Vmax_CFG; Vmax_SWDM	Maximum voltage at CFG and SWDM pins	−0.3	40	V
Vmax_digIn	Maximum voltage at digital input and open−drain pins (TxDLx, TxDC, SCK, SDI, INTN, RSTN, UVN_VOUT)	−0.3	6	V
Vmax_digOut	Maximum voltage at digital push−pull output pins (RxDLx, RxDC, SDO)	−0.3	VOUT+0.3	V
Vmax_CSN	Maximum voltage at CSN pin	−0.3	40	V
Tjunc_max	Junction temperature	−40	+170	°C
V_ESD	System ESD on pins CANH, CANL, LIN1, LIN2, VOUT2, VS, VS_VOUT2, WU as per IEC 61000−4−2: 330 Ω / 150 pF	≥ ±6		kV
	Human body model on pins CANH, CANL, LIN1, LIN2 stressed towards GND with 1500 Ω / 100 pF	≥ ±6		kV
	Human body model on pins VS, VS_VOUT2, WU stressed towards GND with 1500 Ω / 100 pF	≥ ±4		kV
	Human body model on all pins as per JESD22−A114 / AEC−Q100−002	≥ ±2		kV
	Charge device model on all pins as per JESD22−C101 / AEC−Q100−011	≥ ±500		V
MSL	Moisture Sensitivity Level	2		

Stresses exceeding those listed in the Maximum Ratings table may damage the device. If any of these limits are exceeded, device functionality should not be assumed, damage may occur and reliability may be affected.

13. BUCK pin tolerates transient voltage excursions below −1 V, caused by the buck−converter switching and the non−ideal characteristics of diode D2 (see Figure 2). It is not implied that a hard voltage source of less than −1 V can be connected to the pin externally.

Table 26. THERMAL CHARACTERISTICS

Symbol	Parameter	Value	Units
$R_{\theta JC}$	Thermal resistance junction−to−case	3.9	°C/W

Table 27. OPERATING RANGES

Symbol	Parameter	Min	Max	Units
Vop_V_IN_boostbuck	V_IN operating voltage for boost/buck operation	2.5	28	V
Vop_V_IN_buck	V_IN operating voltage for buck−only operation	6	28	V
Vop_VS	Operating voltage at VS pin	6	28	V
Vop_VS_VOUT2	Operating DC voltage at VS_VOUT2 pin	6	28	V
Vop_BOOST	Operating voltage at BOOST pin	0	V_MID+V_D1	V
Vop_V_MID	Operating voltage at V_MID pin	5.5	28	V
Vop_BUCK	Operating voltage at BUCK pin	−V_D2	V_MID	V
Vop_VOUT	Regulated voltage at VOUT2 supply output	4.9	5.1	V
Vop_VOUT2	Regulated voltage at VOUT2 supply output	4.9	5.1	V
Vop_VCC_CAN_normal	Operating voltage at VCC_CAN pin for normal and receive only CAN modes	4.75	5.25	V
Vop_VCC_CAN_lowpower	Operating voltage at VCC_CAN pin for wakeup and off CAN modes	0	5.25	V
Vop_CANH, Vop_CANL	Operating voltage at CAN bus pins	0	VCC_CAN	V
Vop_LINx	Operating voltage at LIN bus pins	0	VS	V
Vop_FSOx	Operating voltage at FSOx pins	0	VS	V
Vop_WU	Operating voltage at WU pin	0	VS	V
Vop_CFG; Vop_SWDM	Operating voltage at CFG and SWDM pins	0	VS	V
Vop_digIO	Operating voltage at digital input and output pins (TxDLx, RxDLx, TxDC, RxDC, SCK, CSN, SDI, SDO, INTN, RSTN, UVN_VOUT)	0	VOUT	V
Tjunc_op	Junction temperature	−40	+150	°C

Functional operation above the stresses listed in the Recommended Operating Ranges is not implied. Extended exposure to stresses beyond the Recommended Operating Ranges limits may affect device reliability.

ELECTRICAL CHARACTERISTICS

The characteristics defined in this section are guaranteed within the operating ranges listed in Table 27, unless stated otherwise. Positive currents flow into the respective pin.

Power Supply

Table 28. SUPPLY MONITORING ELECTRICAL CHARACTERISTICS

Symbol	Parameter	Conditions	Min	Typ	Max	Unit
V_MID_PORH	V_MID threshold for the power−up of the circuit	V_MID rising	3.3	3.7	4	V
V_MID_PORL	V_MID threshold for the shut−down of the circuit	V_MID falling	2.2	2.65	3	V
VS_MON	Monitoring level on VS pin defining the operation of the LIN transceivers	VS falling	3		5.2	V
VS_MON_hys	Hysteresis of the VS monitor			0.12		V
t_VS_MON_filt	VS monitoring filter time			16	25	μs
VOUT_RES1	VOUT monitoring threshold 1	VOUT falling	4.55	4.65	4.75	V
VOUT_RES2	VOUT monitoring threshold 2	VOUT falling	3.8	3.9	4.0	V
VOUT_RES3	VOUT monitoring threshold 3	VOUT falling	3.35	3.45	3.55	V
VOUT_RES4	VOUT monitoring threshold 4	VOUT falling	3.0	3.1	3.2	V
VOUT_RES_hys	VOUT monitoring threshold hysteresis		0.03	0.1	0.14	V
VOUT_FAIL	VOUT failure threshold	VOUT rising		2		V
t_VOUT_UV_filt	Undervoltage detection filter time			16	25	μs
t_VOUT_powerup	VOUT undervoltage time−out for short−circuit re-cognition w.r.t. VOUT_FAIL threshold		1.35	1.5	1.65	s
t_VOUT_reset	RSTN pulse extension		4.5	5	5.5	ms
VOUT2_UV	VOUT2 under−voltage threshold	VOUT2 falling	4.45	4.65	4.75	V
VOUT2_UV_hys	VOUT2 under−voltage threshold hysteresis			0.1		V
t_VOUT2_UV_filt	Undervoltage detection filter time			16	25	μs
VOUT2_OV	VOUT2 over−voltage threshold			7		V
VOUT2_OV_hys	VOUT2 over−voltage threshold hysteresis			0.1		V
t_VOUT2_OV_filt	Overvoltage detection filter time			32	50	μs

Table 29. DC/DC CONVERTER ELECTRICAL CHARACTERISTICS

Symbol	Parameter	Conditions	Min	Typ	Max	Unit
VOUT	DCDC output voltage	NCV7471(A) in Normal or Standby; Suitable external components for the required load current and input voltage used.	4.9	5.0	5.1	V
I_OUT	DCDC output current available for external loads (see Figure 2)	NCV7471(A) in Normal or Standby; function of external components			500	mA
Imaxpeak_BOOST	Maximum peak−current detection threshold in BOOST stage	Tj ≤ 0°C Tj > 0°C	1.6 1.6		2.2 2.0	A
Imaxpeak_BUCK	Maximum peak−current detection threshold in BUCK stage		0.8		1.0	A
V_MID_reg	Middle voltage level	Boosting active	6.175	6.5	6.825	V
Ron_BOOST	On−resistance of the boost−stage switch				0.45	Ω
Ron_BUCK	On−resistance of the buck−stage switch				0.6	Ω
V_MID_Ron	V_MID level for parametrical on−resistance of the converter switches		5			V
fsw_DCDC	Constant switching frequency		450	485	520	kHz
fmod_DCDC	Modulation frequency	Modulation enabled via SPI	8	10	13	kHz
dmod_DCDC_1	Modulation depth 1			10		%
dmod_DCDC_2	Modulation depth 2			20		%
dmod_DCDC_3	Modulation depth 3			30		%

Product parametric performance is indicated in the Electrical Characteristics for the listed test conditions, unless otherwise noted. Product performance may not be indicated by the Electrical Characteristics if operated under different conditions.

Table 30. VOUT2 REGULATOR ELECTRICAL CHARACTERISTICS

Symbol	Parameter	Conditions	Min	Typ	Max	Unit
VOUT2	VOUT2 regulator output voltage	VOUT2 regulator active; Iload(VOUT2) ≤ 5 mA	4.95	5.0	5.05	V
		VOUT2 regulator active; Iload(VOUT2) ≤ 50 mA	4.9	5.0	5.1	V
VOUT2_drop	Drop−out voltage between VS_VOUT2 and VOUT2	Iload(VOUT2) = 50 mA		0.35	0.6	V
Ilim_VOUT2	VOUT2 current limitation	VOUT2 regulator active			−80	mA

Table 31. CURRENT CONSUMPTIONS

Symbol	Parameter	Conditions	Min	Typ	Max	Unit
I_VS (Note 14)	VS consumption in LIN normal mode	LIN1 and LIN2 in Normal mode; recessive on both LIN buses			3.2	mA
	VS consumption with LIN in Wakeup or Off mode	LIN1 and LIN2 in LIN−wakeup or Off mode; no activity on both LIN buses; Tj ≤ 85°C			8	μA
I_VS_VOUT2 (Note 14)	VS_VOUT2 consumption if VOUT2 is on	VOUT2 regulator is active			30 μA + 1.1 x I(VOUT2)	−
	VS_VOUT2 consumption if VOUT2 is off	VOUT2 regulator is off; VS_VOUT2 ≤ 13.5 V; Tj ≤ 85°C			1	μA
I_VCC_CAN (Note 14)	VCC_CAN consumption for dominant transmission	CAN in Normal mode driving dominant on the CAN bus; 60 Ω load on the CAN pins			75	mA
	VCC_CAN consumption for recessive transmission	CAN in Receive−only mode or CAN in Normal mode with recessive on the bus			10	mA
	VCC_CAN consumption in CAN Wakeup mode	CAN Wakeup mode (CAN supplied from V_MID); Device in Standby or Sleep mode; no wakeup detected; Tj ≤ 85°C			2	μA
I_IN (Notes 14, 16)	DCDC input current in Standby or Normal mode	NCV7471(A) in Standby or Normal mode; V_IN (Note 15) = 13.5 V; Tj ≤ 85°C; no external VOUT load enBoost = Low; CAN in Off mode		70	95	μA
	DCDC input current in Sleep mode	NCV7471(A) in Sleep mode; 5.5 V ≤ V_IN (Note 15) ≤ 18 V; Tj ≤ 85°C; enBoost = Low; CAN in Off mode		55	70	μA
	I_IN adder for CAN wakeup	NCV7471(A) in Normal, Standby or Sleep mode; 5.5 V ≤ V_IN (Note 15) ≤ 18 V; Tj ≤ 85°C; CAN in Wakeup mode		10		μA
	I_IN adder for BOOST stage	NCV7471(A) in Standby or Normal mode; 5.5 V ≤ V_IN (Note 15) ≤ 18 V; Tj ≤ 85°C; enBoost = High; Boost−stage not switching		10		μA

14. The supply currents are depicted in Figure 2.
15. V_IN is the DCDC input voltage − see Figure 2.
16. I_IN is the total DCDC input current, covering the quiescent consumption of the device (through pins BOOST, V_MID, BUCK and VOUT), the current into the external load, and the losses associated with the DCDC conversion.

CAN Transceiver

Table 32. CAN TRANSCEIVER ELECTRICAL CHARACTERISTICS

Symbol	Parameter	Conditions	Min	Typ	Max	Unit
CAN TRANSMITTER DC CHARACTERISTICS						
Vo(reces)(CANH)	recessive bus voltage at pin CANH	V(TxDC) = VOUT no load transmitter on	2	2.5	3	V
Vo(reces)(CANH)	recessive bus voltage at pin CANH	no load transmitter off	−0.1	0	0.1	V
Vo(reces)(CANL)	recessive bus voltage at pin CANL	V(TxDC) = VOUT no load transmitter on	2	2.5	3	V
Vo(reces)(CANL)	recessive bus voltage at pin CANL	no load transmitter off	−0.1	0	0.1	V
Io(reces)(CANH)	recessive output current at pin CANH	−35 V < V(CANH) < 35 V (Note 17), 0 V < VCC_CAN < 5.25 V	−2.5	–	2.5	mA
Io(reces)(CANL)	recessive output current at pin CANL	−35 V < V(CANL) < 35 V (Note 17), 0 V < VCC_CAN < 5.25 V	−2.5	–	2.5	mA
Vo(dom)(CANH)	dominant output voltage at pin CANH	V(TxDC) = 0 V 42.5 Ω < R_L < 60 Ω	3	3.6	4.25	V
Vo(dom)(CANL)	dominant output voltage at pin CANL	V(TxDC) = 0 V 42.5 Ω < R_L < 60 Ω	0.5	1.4	1.75	V
Vo(dif)(bus_dom)	differential bus output voltage (V(CANH) − V(CANL))	V(TxDC) = 0 V 42.5 Ω < R_L < 60 Ω	1.5	2.25	3	V
Vo(sym)(bus_dom)	bus output voltage symmetry (V(CANH) + V(CANL))	V(TxDC) = 0 V	0.9		1.1	V_{CC_CAN}
Vo(dif)(bus_rec)	differential bus output voltage (V(CANH) − V(CANL))	V(TxDC) = VOUT recessive, no load	−120	0	50	mV
Io(SC)(CANH)	short−circuit output current at pin CANH	V(CANH) = 0 V, V(TxDC) = 0 V	−100	−70	−45	mA
Io(SC)(CANL)	short−circuit output current at pin CANL	V(CANL) = 36 V, V(TxDC) = 0 V	45	70	100	mA
CAN RECEIVER DC CHARACTERISTICS						
Vi(dif)(th)	Differential receiver threshold voltage	−12 V < V(CANH) < 12 V −12 V < V(CANL) < 12 V	0.5	0.7	0.9	V
Vihcm(dif)(th)	Differential receiver threshold voltage for high common mode	−35 V < V(CANH) < 35 V −35 V < V(CANL) < 35 V (Note 17)	0.4	0.7	1	V
Ri(cm)CANH	Common mode input resistance at pin CANH		15	26	37	kΩ
Ri(cm)CANL	Common mode input resistance at pin CANL		15	26	37	kΩ
Ri(cm)(m)	Matching between pin CANH and pin CANL common mode input resistance	V(CANH) = V(CANL)	−3	0	3	%
Ri(dif)	Differential input resistance		25	50	75	kΩ
CI(CANH)	input capacitance at pin CANH	V(TxDC) = VCC_CAN, not tested in production	–	7.5	20	pF
CI(CANL)	input capacitance at pin CANL	V(TxDC) = VCC_CAN, not tested in production	–	7.5	20	pF
CI(dif)	differential input capacitance	V(TxDC) = VCC_CAN, not tested in production	–	3.75	10	pF

17. In production, the parameter is measured for common−mode range from −30 V to +35 V. The common mode range down to −35 V is guaranteed by design.

Table 32. CAN TRANSCEIVER ELECTRICAL CHARACTERISTICS

Symbol	Parameter	Conditions	Min	Typ	Max	Unit
CAN RECEIVER DC CHARACTERISTICS						
ILI_CANH	Input leakage current at pin CANH	0 Ω < R(VCC_CAN to GND) < 1 MΩ V(CANH) = V(CANL) = 5 V	−5	0	5	μA
ILI_CANL	Input leakage current at pin CANL		−5	0	5	μA
Vi(dif)(th)	Differential receiver threshold voltage for the wakeup detection	−12 V < V(CANH) < 12 V −12 V < V(CANL) < 12 V	0.4	0.8	1.15	V
CAN TRANSCEIVER DYNAMIC CHARACTERISTICS						
td(TxDC−BusOn)	delay TxDC to bus active	C_L = 100 pF between CANH − CANL	5	85	110	ns
td(TxDC−BusOff)	delay TxDC to bus inactive	C_L = 100 pF between CANH − CANL	5	30	110	ns
td(BusOn−RxDC)	delay bus active to RxDC	C(RxDC) = 15 pF	5	55	110	ns
td(BusOff−RxDC)	delay bus inactive to RxDC	C(RxDC) = 15 pF	5	100	110	ns
tdPD(TxDC−RxDC)dr	Propagation delay TxDC to RxDC	C_L = 100 pF between CANH − CANL	45		245	ns
tdPD(TxDC−RxDC)rd	Propagation delay TxDC to RxDC	C_L = 100 pF between CANH − CANL	45		230	ns
t_CAN_wake_dom	Dominant time for CAN wakeup	LP mode Vdif(dom) > 1.4 V	0.5	2.5	5	μs
		LP mode Vdif(dom) > 1.2 V	0.5	3	5.8	μs
t_CAN_wake_rec	Recessive time for CAN wakeup		0.5	2.5	5	μs
t_CAN_wake_timeout	Maximum length of the CAN wakeup pattern		0.9	1	1.1	ms
T_TxDC_timeout	TxDC dominant time for time out	VTxDC = 0 V	2.9	3.7	4.5	ms

17. In production, the parameter is measured for common−mode range from −30 V to +35 V. The common mode range down to −35 V is guaranteed by design.

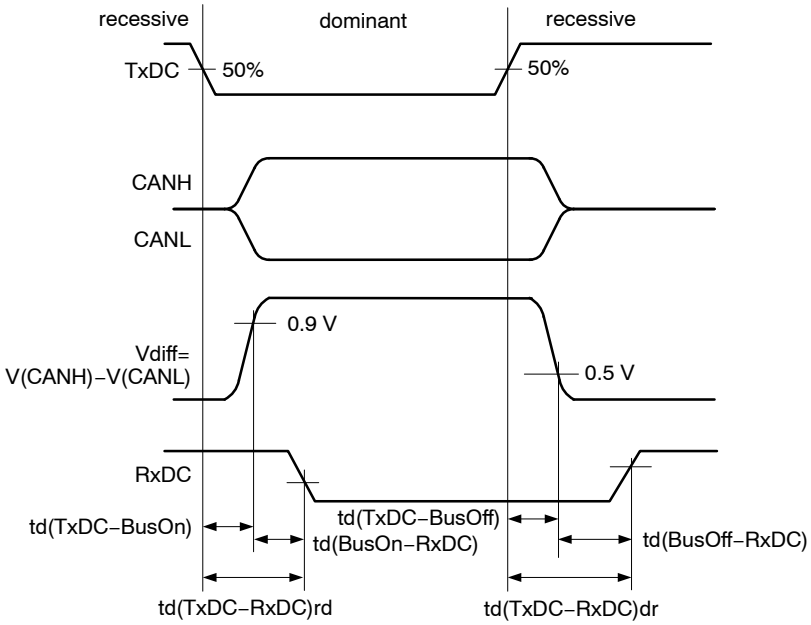

Figure 23. Definition of CAN Dynamic Parameters

LIN Transceivers

Table 33. LINx TRANSCEIVER ELECTRICAL CHARACTERISTICS

Symbol	Parameter	Conditions	Min	Typ	Max	Unit
LINx TRANSMITTER DC CHARACTERISTICS						
VLIN_dom_LoSup	LIN dominant output voltage	TxDLx = Low; VS = 7.3 V			1.2	V
VLIN_dom_HiSup	LIN dominant output voltage	TxDLx = Low; VS = 18 V			2.0	V
VLIN_REC	LIN recessive output voltage	TxDLx = High; I(LIN) = 0 mA	VS – 1.2		VS – 0.3	V
ILIN_lim	Short circuit current limitation	VLIN = VS = 18 V	40		200	mA
Rslave	Internal pull−up resistance	LIN Normal or Receive−only mode	20	33	47	kΩ
LINx RECEIVER DC CHARACTERISTICS						
Vbus_dom	Bus voltage for dominant state				0.4	VS
Vbus_rec	Bus voltage for recessive state		0.6			VS
Vrec_dom	Receiver threshold	LIN bus going from recessive to dominant	0.4		0.6	VS
Vrec_rec	Receiver threshold	LIN bus going from dominant to recessive	0.4		0.6	VS
Vrec_cnt	Receiver center voltage	(Vrec_dom + Vrec_rec)/2	0.475		0.525	VS
Vrec_hys	Receiver hysteresis	Vrec_rec – Vrec_dom	0.05		0.175	VS
ILIN_off_dom	LIN output current, bus in dominant state	Normal LIN Mode, Driver Off; VS = 12 V; VLIN = 0 V	−1			mA
ILIN_off_dom_slp	LIN output current, bus in dominant state	LIN Wake Mode, VS = 12 V; VLIN = 0 V	−20	−15	−2	μA
ILIN_off_rec	LIN output current, bus in recessive state	Driver Off; VS < 18 V; VS < VLIN < 18 V			1	μA
ILIN_no_GND	LIN current with missing GND	VS = GND = 12 V; 0 V < VLIN < 18 V	−1		1	mA
ILIN_no_VS	LIN current with missing VS	VS = GND = 0 V; 0 V < VLIN < 18 V			5	μA
LINx TRANSCEIVER DYNAMIC CHARACTERISTICS						
D1	Duty Cycle 1 = tBUS_REC(min) / (2 x TBit)	THREC(max) = 0.744 x VS THDOM(max) = 0.581 x VS TBit = 50 μs V(VS) = 7 V to 18 V	0.396		0.5	
D2	Duty Cycle 2 = tBUS_REC(max) / (2 x TBit)	THREC(min) = 0.422 x VS THDOM(min) = 0.284 x VS TBit = 50 μs V(VS) = 7.6 V to 18 V	0.5		0.581	
D3	Duty Cycle 3 = tBUS_REC(min) / (2 x TBit)	THREC(max) = 0.778 x VS THDOM(max) = 0.616 x VS TBit = 96 μs V(VS) = 7 V to 18 V	0.417		0.5	
D4	Duty Cycle 4 = tBUS_REC(max) / (2 x TBit)	THREC(min) = 0.389 x VS THDOM(min) = 0.251 x VS TBit = 96 μs V(VS) = 7.6 V to 18 V	0.5		0.590	
T_fall	LIN falling edge	Normal Mode; VS = 12 V			22.5	μs
T_rise	LIN rising edge	Normal Mode; VS = 12 V			22.5	μs
T_sym	LIN slope symmetry	Normal Mode; VS = 12 V	−4	0	4	μs
Trec_prop_down	Propagation delay of receiver	Falling edge	0.1		6	μs
Trec_prop_up		Rising edge	0.1		6	μs
Trec_sym	Propagation delay symmetry	Trec_prop_down – Trec_prop_up	−2		2	μs
t_LIN_wake	Dominant duration for wakeup	LIN in wakeup mode	30	90	150	μs
T_TxDLx_timeout	TxDLx dominant time−out	TxDLx = Low; LIN dominant time−out enabled	6	13	20	ms
C_LINx	Capacitance of the LINx pins	Guaranteed by design; not tested in production		15	25	pF

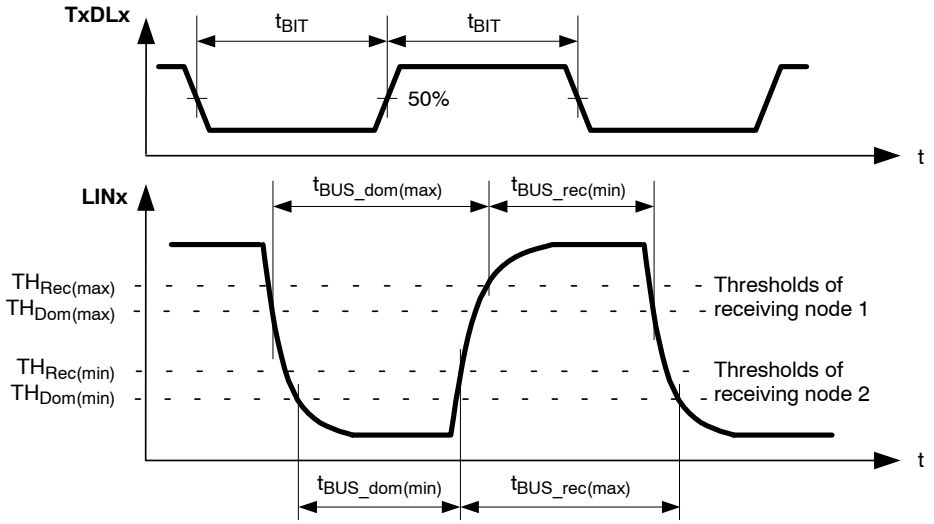

Figure 24. Definition of LINx Duty Cycle Parameters

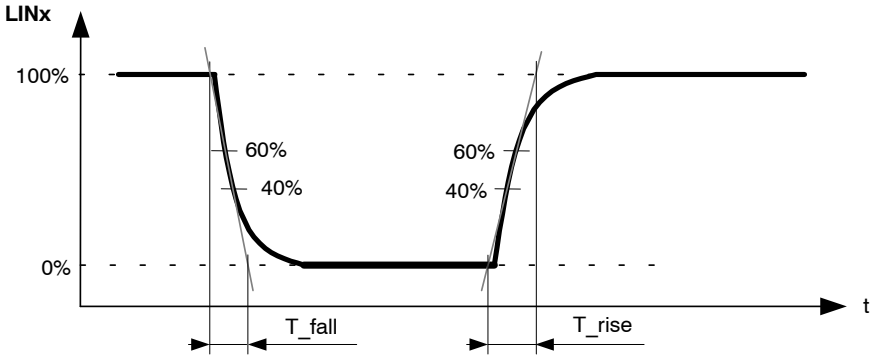

Figure 25. Definition of LINx Edge Parameters

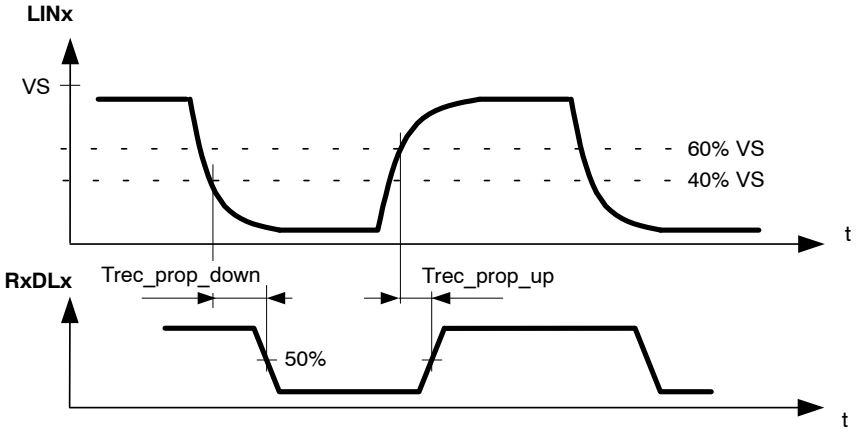

Figure 26. Definition of LINx Receiver Timing Parameters

Digital Control Timing and SPI Timing

Table 34. DIGITAL CONTROL CHARACTERISTICS

Symbol	Parameter	Conditions	Min	Typ	Max	Unit
t_WD_TO t_WD_WIN	Duration of the total watchdog period	WD_PER_0 selected in SPI	7.2	8	8.8	ms
		WD_PER_1 selected in SPI	14.4	16	17.6	ms
		WD_PER_2 selected in SPI	28.8	32	35.2	ms
		WD_PER_3 selected in SPI	57.6	64	70.4	ms
		WD_PER_4 selected in SPI	115.2	128	140.8	ms
		WD_PER_5 selected in SPI	230.4	256	281.6	ms
		WD_PER_6 selected in SPI	460.8	512	563.2	ms
		WD_PER_7 selected in SPI	921.6	1024	1126.4	ms
f_FSO2	FSO2 toggling frequency	FSO_internal = 1	1.125	1.25	1.375	Hz
dc_FSO2	FSO2 duty cycle		45	50	55	%
f_FSO3	FSO3 toggling frequency		90	100	110	Hz
dc_FSO3	FSO3 duty cycle		18	20	22	%
t_INTN_active	Active (Low) pulse on INTN pin		0.9	1	1.1	ms
t_INTN_inactive	Minimum time between two consecutive interrupt requests		4.5	5	5.5	ms
t_RSTN_filt	RSTN input signal filter time		1		10	μs
t_RSTN_Clamped_High	Timeout for “RSTN clamped High” detection		0.9	1	1.1	ms
t_RSTN_Clamped_Low	Timeout for “RSTN clamped Low” detection		225	250	275	ms

Table 35. SPI INTERFACE TIMING CHARACTERISTICS

Symbol	Parameter	Conditions	Min	Typ	Max	Unit
tCSN_SCK	First SPI clock edge after CSN active		100			ns
tSCK_CSN	Last SPI clock edge to CSN inactive		100			ns
tCSN_SDO	SDO output stable after CSN active				100	ns
tCSN_High	Inter−frame space (CSN inactive)		10			μs
tSCK_High	Duration of SPI clock High level		100			ns
tSCK_Low	Duration of SPI clock Low level		100			ns
tSCK_per	SPI clock period		250			ns
tSDI_set	Setup time of SDI input towards SPI clock		50			ns
tSDI_hold	Hold time of SDI input towards SPI clock		50			ns
tSCK_SDO	delay of SDO output stable after an SPI clock edge				50	ns

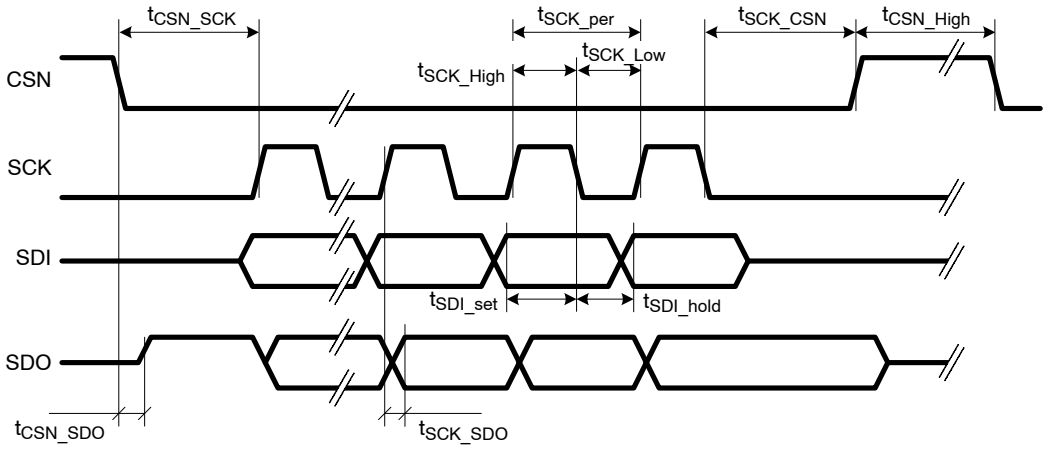

Figure 27. Definition of SPI Timing Parameters

Thermal Protection

Table 36. THERMAL PROTECTION CHARACTERISTICS

Symbol	Parameter	Conditions	Min	Typ	Max	Unit
Tj_WAR	Junction temperature for thermal warning		130	140	150	°C
Tj_SD	Junction temperature for thermal shut−down		150	160	170	°C

Digital IO Pins

Table 37. ELECTRICAL CHARACTERISTICS OF LOW VOLTAGE DIGITAL INPUTS/OUTPUTS

Symbol	Parameter	Conditions	Min	Typ	Max	Unit
VinL_pinx	Low−level input threshold	pinx = SDI, SCK, CSN, TxDC, TxDL1/2, RSTN	0		0.8	V
VinH_pinx	High−level input threshold		2		VOUT	V
Rpullup_pinx	Integrated pull−up resistor to VOUT	pinx = CSN, TxDC, TxDL1/2, INTN, RSTN, UVN_VOUT	55	100	185	kΩ
Rpulldown_pinx	Integrated pull−down resistor to GND	pinx = SDI, SCK	55	100	185	kΩ
IoutL_pinx	Low−level output driving current	pinx is logical Low; forced Vpinx = 0.4 V; pinx = SDO, RxDC, RxDL1/2, RSTN, INTN, UVN_VOUT	2	6	12	mA
IoutH_pinx	High−level output driving current	pinx is logical High; forced Vpinx = VOUT−0.4 V; pinx = SDO, RxDC, RxDL1/2	−12	−6	−2	mA
Ileak_HZ_pinx	Leakage in the tristate	pinx in HZ state; forced 0 V < Vpinx < VOUT; pinx = SDO	−10		10	μA
Ileak_OD	Leakage of an open−drain output	open−drain pinx in High state; forced Vpinx = VOUT; pinx = INTN, RSTN, UVN_VOUT	−10		10	μA
V_MID_DigOut_Low	V_MID value guaranteeing Low level on RSTN and UVN_VOUT pins	Shut−down mode; RSTN and UVN_VOUT connected to fixed 5 V through a 10 kΩ resistor. If V_MID > *V_MID_DigOut_Low* **or** VOUT > *VOUT_DigOut_Low*, then RSTN and UVN_VOUT stay below 400 mV Not tested in production; guaranteed by design			1.9	V
VOUT_DigOut_Low	VOUT value guaranteeing Low level on RSTN and UVN_VOUT pins				2.7	V

CFG and SWDM Pins

Table 38. ELECTRICAL CHARACTERISTICS OF CFG AND SWDM INPUTS

Symbol	Parameter	Conditions	Min	Typ	Max	Unit
VinL_HV_pinx	Low−level input threshold	pinx = CFG, SWDM	0		0.8	V
VinH_HV_pinx	High−level input threshold		2		VS	V
Rpulldown_HV_pinx	Internal pull−down to GND	pinx = CFG, SWDM	55	100	185	kΩ

FSO Pins

Table 39. FSOx PIN ELECTRICAL CHARACTERISTICS

Symbol	Parameter	Conditions	Min	Typ	Max	Unit
I_FSOx_inactive	FSOx current in inactive state	FSOx inactive (no failure), or HZ−part of the FSO2/3 pattern. 0 V < V(FSOx) < 28 V	−2		2	μA
V_FSOx_active	Voltage drop at FSOx when active	FSO1 active or Low−part of the FSO2/3 pattern; I(FSOx) = 5 mA			0.4	V
		FSO1 active or Low−part of the FSO2/3 pattern; I(FSOx) = 10 mA			0.8	V

WU Pin

Table 40. WU PIN ELECTRICAL CHARACTERISTICS

Symbol	Parameter	Conditions	Min	Typ	Max	Unit
Vth_WU	WU pin threshold		2		4	V
Vhys_WU	WU pin threshold hysteresis		0.03		0.25	V
t_WU_filt	WU wakeup filter time		10		50	μs
Ipu_WU	Pull−up current on WU pin	V(WU) = 4 V	−11		−3	μA
Ipd_WU	Pull−down current on WU pin	V(WU) = 2 V	3		11	μA

Table 41. DEVICE ORDERING INFORMATION

Part Number	Description	Package Type	Shipping†
NCV7471DQ5R2G			1500 / Tape & Reel
NCV7471ADQ5R2G	System Basis Chip with Dual LIN, HS−CAN and 500 mA Boost−Buck DCDC, FSOx outputs active during VOUT undervoltage		1500 / Tape & Reel

†For information on tape and reel specifications, including part orientation and tape sizes, please refer to our Tape and Reel Packaging Specifications Brochure, BRD8011/D.

MECHANICAL CASE OUTLINE
PACKAGE DIMENSIONS

ON Semiconductor®

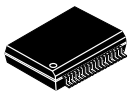

SCALE 1:1

SSOP36 EP
CASE 940AB
ISSUE A

DATE 19 JAN 2016

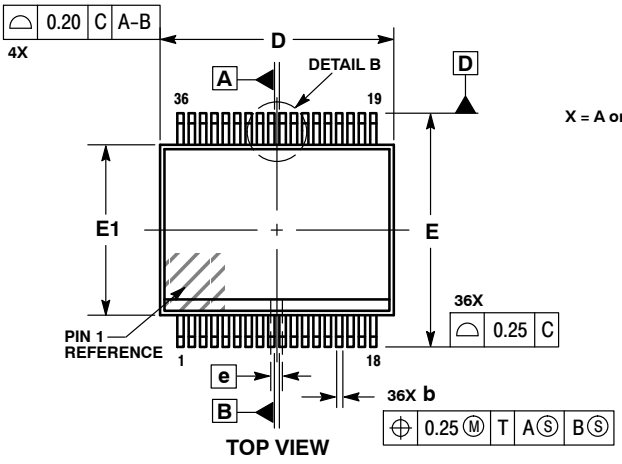

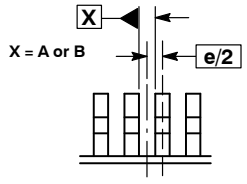

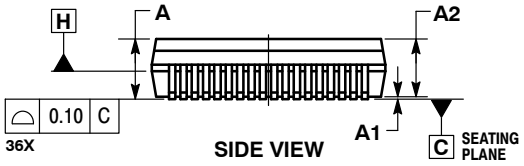

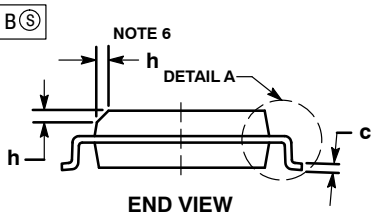

NOTES:
1. DIMENSIONING AND TOLERANCING PER ASME Y14.5M, 1994.
2. CONTROLLING DIMENSION: MILLIMETERS.
3. DIMENSION b DOES NOT INCLUDE DAMBAR PROTRUSION. ALLOWABLE DAMBAR PROTRUSION SHALL BE 0.13 TOTAL IN EXCESS OF THE b DIMENSION AT MMC.
4. DIMENSION b SHALL BE MEASURED BETWEEN 0.10 AND 0.25 FROM THE TIP.
5. DIMENSIONS D AND E1 DO NOT INCLUDE MOLD FLASH, PROTRUSIONS OR GATE BURRS. DIMENSIONS D AND E1 SHALL BE DETERMINED AT DATUM H.
6. THIS CHAMFER FEATURE IS OPTIONAL. IF IT IS NOT PRESENT, A PIN ONE IDENTIFIER MUST BE LOACATED WITHIN THE INDICATED AREA.

	MILLIMETERS	
DIM	MIN	MAX
A	---	2.65
A1	---	0.10
A2	2.15	2.60
b	0.18	0.30
c	0.23	0.32
D	10.30 BSC	
D2	5.70	5.90
E	10.30 BSC	
E1	7.50 BSC	
E2	3.90	4.10
e	0.50 BSC	
h	0.25	0.75
L	0.50	0.90
L2	0.25 BSC	
M	0°	8°
M1	5°	15°

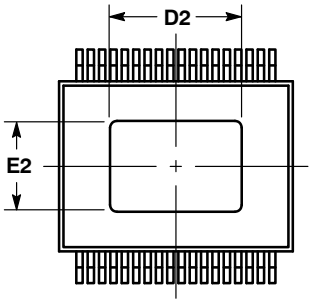

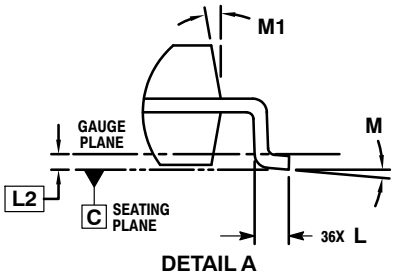

SOLDERING FOOTPRINT

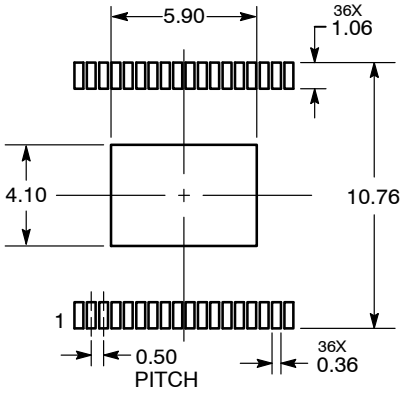

DIMENSIONS: MILLIMETERS

GENERIC MARKING DIAGRAM*

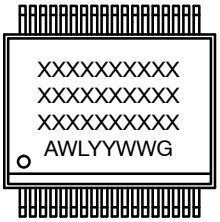

XXXX = Specific Device Code
A = Assembly Location
WL = Wafer Lot
YY = Year
WW = Work Week
G = Pb−Free Package

*This information is generic. Please refer to device data sheet for actual part marking.

DOCUMENT NUMBER:	**98AON46215E**	Electronic versions are uncontrolled except when accessed directly from the Document Repository. Printed versions are uncontrolled except when stamped "CONTROLLED COPY" in red.	
DESCRIPTION:	**SSOP36 EXPOSED PAD**		**PAGE 1 OF 1**

ON Semiconductor and ON are trademarks of Semiconductor Components Industries, LLC dba ON Semiconductor or its subsidiaries in the United States and/or other countries. ON Semiconductor reserves the right to make changes without further notice to any products herein. ON Semiconductor makes no warranty, representation or guarantee regarding the suitability of its products for any particular purpose, nor does ON Semiconductor assume any liability arising out of the application or use of any product or circuit, and specifically disclaims any and all liability, including without limitation special, consequential or incidental damages. ON Semiconductor does not convey any license under its patent rights nor the rights of others.

© Semiconductor Components Industries, LLC, 2019

onsemi, , and other names, marks, and brands are registered and/or common law trademarks of Semiconductor Components Industries, LLC dba "**onsemi**" or its affiliates and/or subsidiaries in the United States and/or other countries. **onsemi** owns the rights to a number of patents, trademarks, copyrights, trade secrets, and other intellectual property. A listing of **onsemi**'s product/patent coverage may be accessed at www.onsemi.com/site/pdf/Patent−Marking.pdf. **onsemi** reserves the right to make changes at any time to any products or information herein, without notice. The information herein is provided "as−is" and **onsemi** makes no warranty, representation or guarantee regarding the accuracy of the information, product features, availability, functionality, or suitability of its products for any particular purpose, nor does **onsemi** assume any liability arising out of the application or use of any product or circuit, and specifically disclaims any and all liability, including without limitation special, consequential or incidental damages. Buyer is responsible for its products and applications using **onsemi** products, including compliance with all laws, regulations and safety requirements or standards, regardless of any support or applications information provided by **onsemi**. "Typical" parameters which may be provided in **onsemi** data sheets and/or specifications can and do vary in different applications and actual performance may vary over time. All operating parameters, including "Typicals" must be validated for each customer application by customer's technical experts. **onsemi** does not convey any license under any of its intellectual property rights nor the rights of others. **onsemi** products are not designed, intended, or authorized for use as a critical component in life support systems or any FDA Class 3 medical devices or medical devices with a same or similar classification in a foreign jurisdiction or any devices intended for implantation in the human body. Should Buyer purchase or use **onsemi** products for any such unintended or unauthorized application, Buyer shall indemnify and hold **onsemi** and its officers, employees, subsidiaries, affiliates, and distributors harmless against all claims, costs, damages, and expenses, and reasonable attorney fees arising out of, directly or indirectly, any claim of personal injury or death associated with such unintended or unauthorized use, even if such claim alleges that **onsemi** was negligent regarding the design or manufacture of the part. **onsemi** is an Equal Opportunity/Affirmative Action Employer. This literature is subject to all applicable copyright laws and is not for resale in any manner.

ADDITIONAL INFORMATION

TECHNICAL PUBLICATIONS:
Technical Library: www.onsemi.com/design/resources/technical−documentation
onsemi Website: www.onsemi.com

ONLINE SUPPORT: www.onsemi.com/support
For additional information, please contact your local Sales Representative at www.onsemi.com/support/sales