LDO Linear Regulators - Micropower, DELAY, Adjustable $\overline{\text{RESET}}$, and Monitor FLAG

150 mA

NCV8502 Series

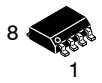

SO−8
D SUFFIX
CASE 751

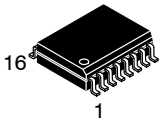

SOIC 16 LEAD
WIDE BODY
EXPOSED PAD
PDW SUFFIX
CASE 751AG

MARKING DIAGRAMS

SO−8

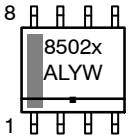

SOW−16
E PAD

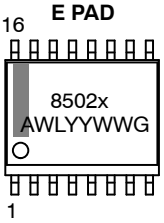

x = Voltage Ratings as Indicated Below:
A = Adjustable
2 = 2.5 V
3 = 3.3 V
5 = 5.0 V
8 = 8.0 V
0 = 10 V
A = Assembly Location
WL, L = Wafer Lot
YY, Y = Year
WW, W = Work Week
G or ▪ = Pb−Free Device

ORDERING INFORMATION

See detailed ordering and shipping information in the package dimensions section on page 12 of this data sheet.

NOTE: Some of the devices on this data sheet have been **DISCONTINUED**. Please refer to the table on page 12.

The NCV8502 is a family of precision micropower voltage regulators. Their output current capability is 150 mA. The family has output voltage options for adjustable, 2.5 V, 3.3 V, 5.0 V, 8.0 V, and 10 V.

The output voltage is accurate within ±2.0% with a maximum dropout voltage of 0.6 V at 150 mA. Low quiescent current is a feature drawing only 90 μA with a 100 μA load. This part is ideal for any and all battery operated microprocessor equipment.

Microprocessor control logic includes an active $\overline{\text{RESET}}$ (with DELAY), and a FLAG monitor which can be used to provide an early warning signal to the microprocessor of a potential impending $\overline{\text{RESET}}$ signal. The use of the FLAG monitor allows the microprocessor to finish any signal processing before the $\overline{\text{RESET}}$ shuts the microprocessor down.

The active $\overline{\text{RESET}}$ circuit operates correctly at an output voltage as low as 1.0 V. The $\overline{\text{RESET}}$ function is activated during the power up sequence or during normal operation if the output voltage drops outside the regulation limits.

The reset threshold voltage can be decreased by the connection of external resistor divider to R_{ADJ} lead.

The regulator is protected against reverse battery, short circuit, and thermal overload conditions. The device can withstand load dump transients making it suitable for use in automotive environments. The device has also been optimized for EMC conditions.

Features

- Output Voltage Options: Adjustable, 2.5 V, 3.3 V, 5.0 V, 8.0 V, 10 V
- ±2.0% Output
- Low 90 μA Quiescent Current
- Fixed or Adjustable Output Voltage
- Active $\overline{\text{RESET}}$
- Adjustable Reset
- 150 mA Output Current Capability
- Fault Protection
  - +60 V Peak Transient Voltage
  - −15 V Reverse Voltage
  - Short Circuit
  - Thermal Overload
- Early Warning through $\overline{\text{FLAG}}$/MON Leads
- NCV Prefix for Automotive and Other Applications Requiring Site and Change Control
- AEC Qualified
- PPAP Capable
- These are Pb−Free Devices

© Semiconductor Components Industries, LLC, 2008

PIN CONNECTIONS, ADJUSTABLE OUTPUT

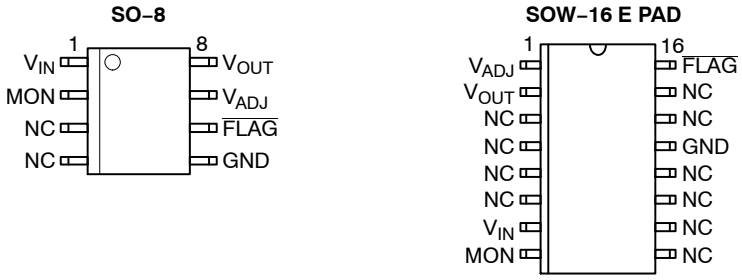

PIN CONNECTIONS, FIXED OUTPUT



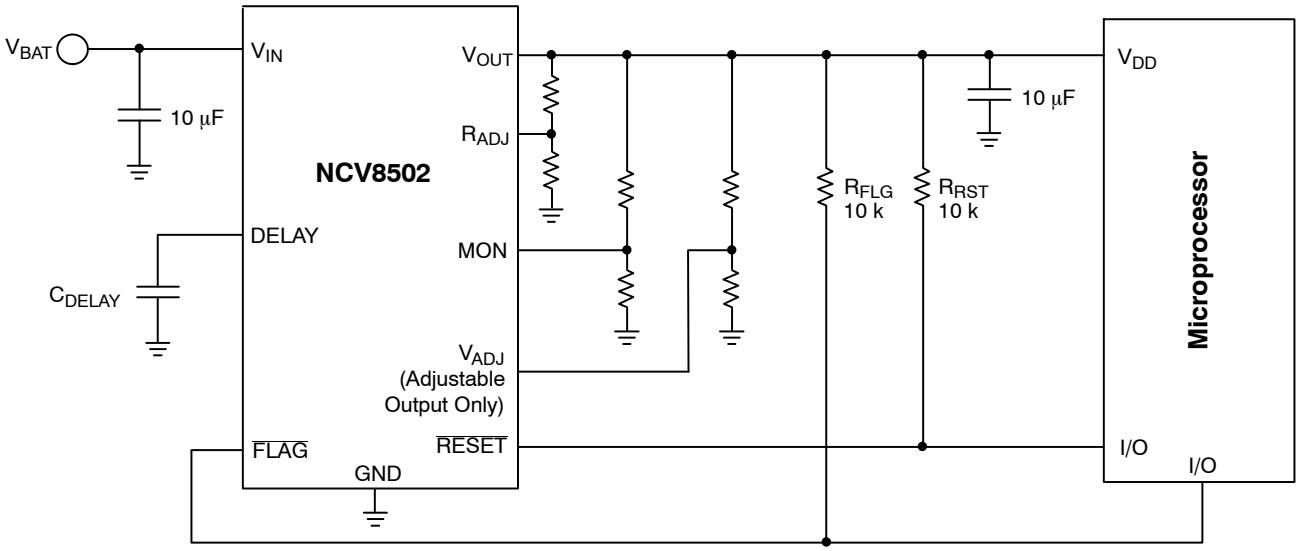

Figure 1. Application Diagram

MAXIMUM RATINGS*

Rating	Value	Unit
V_{IN} (dc)	−15 to 48	V
Peak Transient Voltage (46 V Load Dump @ V_{IN} = 14 V)	60	V
Operating Voltage	45	V
V_{OUT} (dc)	−0.3 to 16	V
Voltage Range ($\overline{RESET}$, $\overline{FLAG}$)	−0.3 to 10	V

Stresses exceeding those listed in the Maximum Ratings table may damage the device. If any of these limits are exceeded, device functionality should not be assumed, damage may occur and reliability may be affected.

*During the voltage range which exceeds the maximum tested voltage of V_{IN}, operation is assured, but not specified. Wider limits may apply. Thermal dissipation must be observed closely.

MAXIMUM RATINGS* (continued)

Rating		Symbol	Value	Unit
Input Voltage Range (MON, V_{ADJ}, R_{ADJ})			−0.3 to 10	V
ESD Susceptibility (Human Body Model)			2.0	kV
Junction Temperature		T_J	−40 to +150	°C
Storage Temperature		T_S	−55 to 150	°C
Package Thermal Resistance, SO−8:	Junction−to−Case Junction−to−Ambient	$R_{\theta JC}$ $R_{\theta JA}$	45 165	°C/W °C/W
Package Thermal Resistance, SOW−16 E PAD:	Junction−to−Case Junction−to−Ambient Junction−to−Pin (Note 1)	$R_{\theta JC}$ $R_{\theta JA}$ $R_{\theta JP}$	15 56 35	°C/W °C/W °C/W
Lead Temperature Soldering: SMD style only, Reflow (Note 2) Pb−Free Part 60 − 150 sec above 217°C, 40 sec max at peak		SLD	265 peak	°C

1. Measured to pin 16.
2. Per IPC / JEDEC J−STD−020C.

*During the voltage range which exceeds the maximum tested voltage of V_{IN}, operation is assured, but not specified. Wider limits may apply. Thermal dissipation must be observed closely.

ELECTRICAL CHARACTERISTICS (I_{OUT} = 1.0 mA, −40°C ≤ T_J ≤ 150°C; V_{IN} = dependent on voltage option (Note 3); unless otherwise specified.)

Characteristic	Test Conditions	Min	Typ	Max	Unit
Output Stage					
Output Voltage for 2.5 V Option	6.5 V < V_{IN} < 16 V, 100 μA ≤ I_{OUT} ≤ 150 mA **5.5 V < V_{IN} < 26 V**, 100 μA ≤ I_{OUT} ≤ 150 mA	2.450 2.425	2.5 2.5	2.550 2.575	V V
Output Voltage for 3.3 V Option	7.3 V < V_{IN} < 16 V, 100 μA ≤ I_{OUT} ≤ 150 mA **5.5 V < V_{IN} < 26 V**, 100 μA ≤ I_{OUT} ≤ 150 mA	3.234 3.201	3.3 3.3	3.366 3.399	V V
Output Voltage for 5.0 V Option	9.0 V < V_{IN} < 16 V, 100 μA ≤ I_{OUT} ≤ 150 mA **6.0 V < V_{IN} < 26 V**, 100 μA ≤ I_{OUT} ≤ 150 mA	4.90 4.85	5.0 5.0	5.10 5.15	V V
Output Voltage for 8.0 V Option	**9.0 V < V_{IN} < 26 V**, 100 μA ≤ I_{OUT} ≤ 150 mA	7.76	8.0	8.24	V
Output Voltage for 10 V Option	**11 V < V_{IN} < 26 V**, 100 μA ≤ I_{OUT} ≤ 150 mA	9.7	10	10.3	V V
Output Voltage for Adjustable Option	V_{OUT} = V_{ADJ} (Unity Gain) 6.5 V < V_{IN} < 16 V, 100 μA < I_{OUT} < 150 mA 5.5 V < V_{IN} < 26 V, 100 μA < I_{OUT} < 150 mA	 1.254 1.242	 1.280 1.280	 1.306 1.318	 V V
Dropout Voltage (V_{IN} − V_{OUT}) (5.0 V, 8.0 V, 10 V and Adj. > 5.0 V Options Only)	I_{OUT} = 150 mA I_{OUT} = 1.0 mA	− −	400 100	600 150	mV mV
Load Regulation	V_{IN} = 14 V, 5.0 mA ≤ I_{OUT} ≤ 150 mA	−30	5.0	30	mV
Line Regulation	[V_{OUT}(Typ) + 1.0] < V_{IN} < 26 V, I_{OUT} = 1.0 mA	−	15	60	mV
Quiescent Current, Low Load 2.5 V Option 3.3 V Option 5.0 V Option 8.0 V Option 10 V Option Adjustable Option	I_{OUT} = 100 μA, V_{IN} = 12 V, MON = V_{OUT}	 − − − − − −	 90 90 90 100 100 50	 125 125 125 150 150 75	 μA μA μA μA μA μA
Quiescent Current, Medium Load All Options	I_{OUT} = 75 mA, V_{IN} = 14 V, MON = V_{OUT}	−	4.0	6.0	mA
Quiescent Current, High Load All Options	I_{OUT} = 150 mA, V_{IN} = 14 V, MON = V_{OUT}	−	12	19	mA
Current Limit	−	151	300	−	mA

3. Voltage range specified in Output Stage of the Electrical Characteristics in boldface type.

ELECTRICAL CHARACTERISTICS (continued) (I_{OUT} = 1.0 mA; −40°C ≤ T_J ≤ 150°C; V_{IN} = dependent on voltage option (Note 4); unless otherwise specified.)

Characteristic	Test Conditions	Min	Typ	Max	Unit
Output Stage					
Short Circuit Output Current	V_{OUT} = 0 V	40	190	–	mA
Thermal Shutdown	(Guaranteed by Design)	150	180	–	°C
Reset Function (RESET)					
$\overline{RESET}$ Threshold for 2.5 V Option HIGH (V_{RH}) LOW (V_{RL})	5.5 V ≤ V_{IN} ≤ 26 V (Note 5) V_{OUT} Increasing V_{OUT} Decreasing	 2.28 2.25	 2.350 2.300	 0.98 × V_{OUT} 0.97 × V_{OUT}	 V V
$\overline{RESET}$ Threshold for 3.3 V Option HIGH (V_{RH}) LOW (V_{RL})	5.5 V ≤ V_{IN} ≤ 26 V (Note 5) V_{OUT} Increasing V_{OUT} Decreasing	 3.00 2.97	 3.102 3.036	 0.98 × V_{OUT} 0.97 × V_{OUT}	 V V
$\overline{RESET}$ Threshold for 5.0 V Option HIGH (V_{RH}) LOW (V_{RL})	 V_{OUT} Increasing V_{OUT} Decreasing	 4.55 4.50	 4.70 4.60	 0.98 × V_{OUT} 0.97 × V_{OUT}	 V V
$\overline{RESET}$ Threshold for 8.0 V Option HIGH (V_{RH}) LOW (V_{RL})	 V_{OUT} Increasing V_{OUT} Decreasing	 7.05 7.00	 7.52 7.36	 0.98 × V_{OUT} 0.97 × V_{OUT}	 V V
$\overline{RESET}$ Threshold for 10 V Option HIGH (V_{RH}) LOW (V_{RL})	 V_{OUT} Increasing V_{OUT} Decreasing	 8.60 8.50	 9.40 9.20	 0.98 × V_{OUT} 0.97 × V_{OUT}	 V V
Output Voltage Low (V_{RLO})	1.0 V ≤ V_{OUT} ≤ V_{RL}, $R_{\overline{RESET}}$ = 10 k	–	0.1	0.4	V
DELAY Switching Threshold (V_{DT})	–	1.4	1.8	2.2	V
DELAY Low Voltage	V_{OUT} < $\overline{RESET}$ Threshold Low(min)	–	–	0.1	V
DELAY Charge Current	DELAY = 1.0 V, V_{OUT} > V_{RH}	1.5	2.5	3.5	μA
DELAY Discharge Current	DELAY = 1.0 V, V_{OUT} = 1.5 V	5.0	–	–	mA
Reset Adjust Switching Voltage ($V_{R(ADJ)}$)	–	1.23	1.31	1.39	V
$\overline{FLAG}$/Monitor					
Monitor Threshold	Increasing and Decreasing	1.10	1.20	1.31	V
Hysteresis	–	20	50	100	mV
Input Current	MON = 2.0 V	−0.5	0.1	0.5	μA
Output Saturation Voltage	MON = 0 V, I_{FLAG} = 1.0 mA	–	0.1	0.4	V
Voltage Adjust (Adjustable Output only)					
Input Current	V_{ADJ} = 1.28 V	−0.5	–	0.5	μA

4. Voltage range specified in Output Stage of the Electrical Characteristics in boldface type.
5. For V_{IN} ≤ 5.5 V, a $\overline{RESET}$ = Low may occur with the output in regulation.

PACKAGE PIN DESCRIPTION, ADJUSTABLE OUTPUT

Package Pin Number		Pin Symbol	Function
SO−8	SOW−16 E PAD		
1	7	V_{IN}	Input Voltage.
2	8	MON	Monitor. Input for early warning comparator. If not needed connect to V_{OUT}.
3, 4	3−6, 9−12, 14, 15	NC	No connection.
5	13	GND	Ground. All GND leads must be connected to Ground.
6	16	$\overline{FLAG}$	Open collector output from early warning comparator.
7	1	V_{ADJ}	Voltage Adjust. A resistor divider from V_{OUT} to this lead sets the output voltage.
8	2	V_{OUT}	±2.0%, 150 mA output.

PACKAGE PIN DESCRIPTION, FIXED OUTPUT

Package Pin Number		Pin Symbol	Function
SO−8	SOW−16 E PAD		
1	7	V_{IN}	Input Voltage.
2	8	MON	Monitor. Input for early warning comparator. If not needed connect to V_{OUT}.
3	9	R_{ADJ}	Reset Adjust. If not needed connect to ground.
4	10	DELAY	Timing capacitor for $\overline{RESET}$ function.
5	13	GND	Ground. All GND leads must be connected to Ground.
6	16	$\overline{RESET}$	Active reset (accurate to $V_{OUT} \geq 1.0$ V)
7	1	$\overline{FLAG}$	Open collector output from early warning comparator.
8	2	V_{OUT}	±2.0%, 150 mA output.
–	3−6, 11, 12, 14, 15	NC	No connection.

TYPICAL PERFORMANCE CHARACTERISTICS

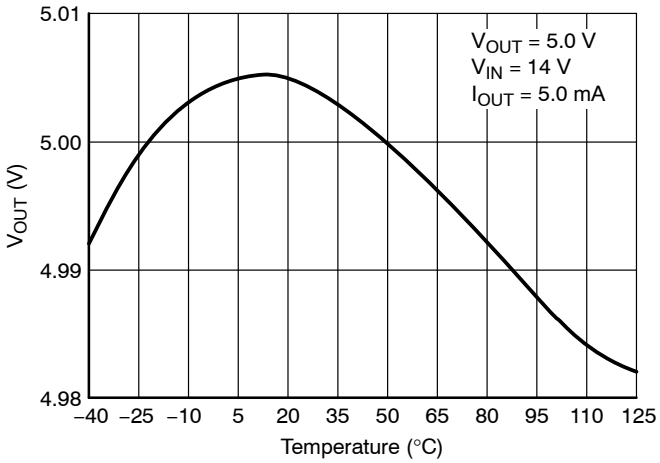

Figure 2. Output Voltage vs. Temperature

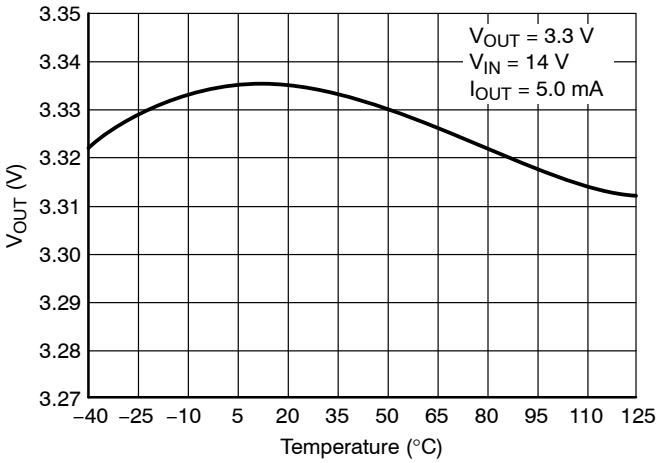

Figure 3. Output Voltage vs. Temperature

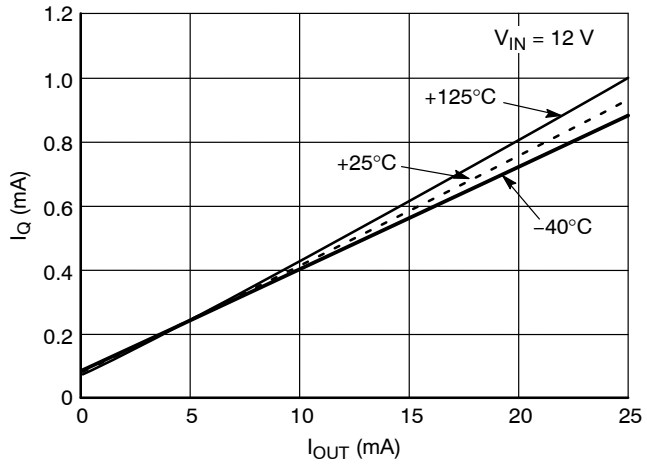

Figure 4. Quiescent Current vs. Output Current

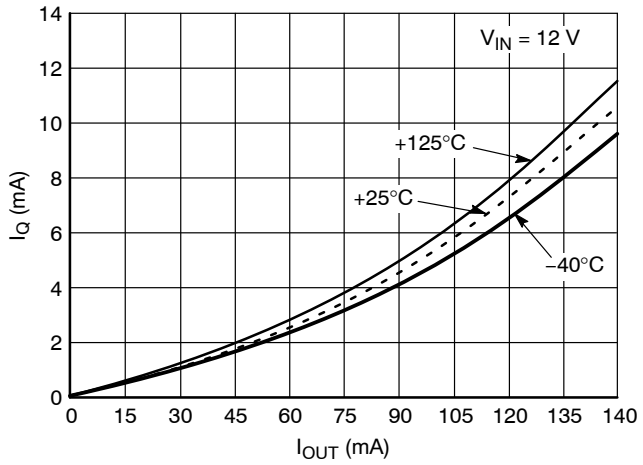

Figure 5. Quiescent Current vs. Output Current

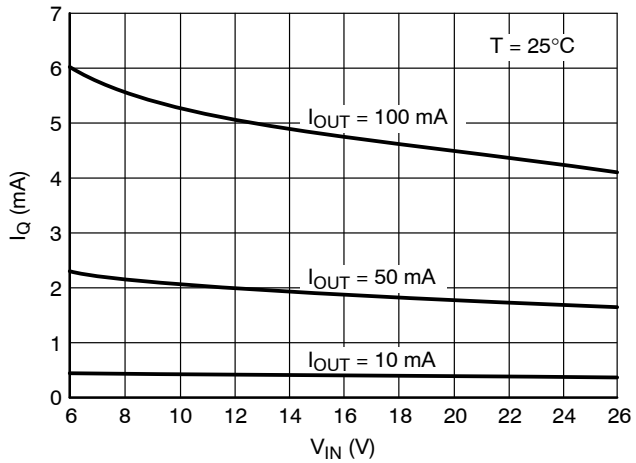

Figure 6. Quiescent Current vs. Input Voltage

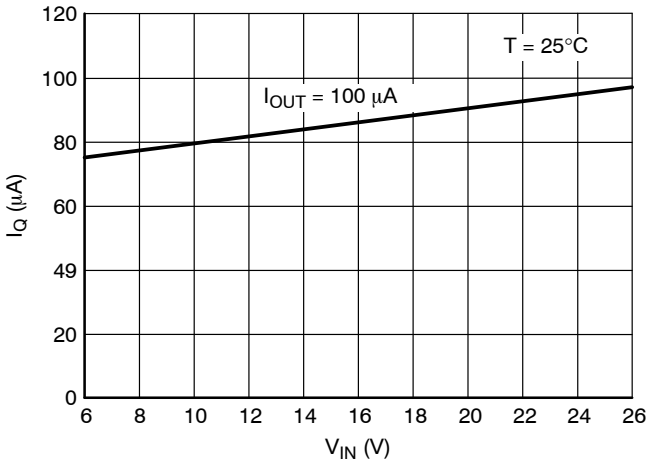

Figure 7. Quiescent Current vs. Input Voltage

TYPICAL PERFORMANCE CHARACTERISTICS

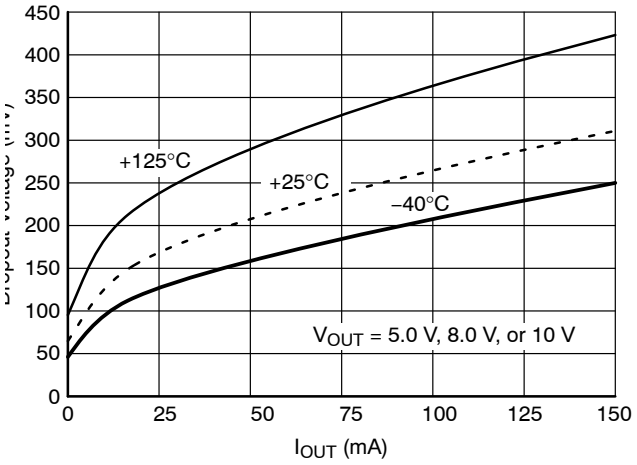

Figure 8. Dropout Voltage vs. Output Current

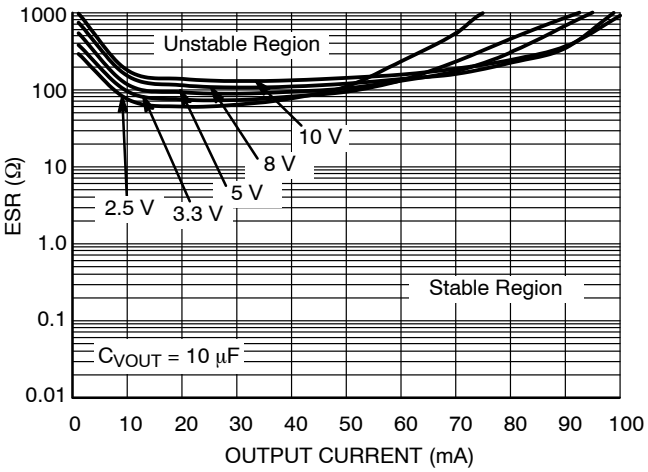

Figure 9. Output Stability with Output Voltage Change

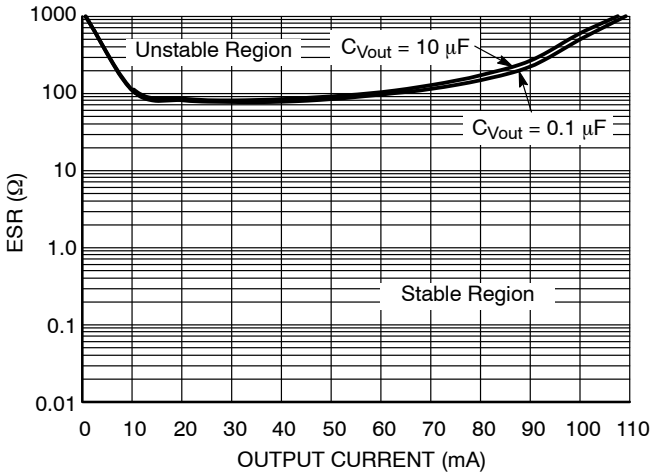

Figure 10. Output Stability with Output Capacitor Change

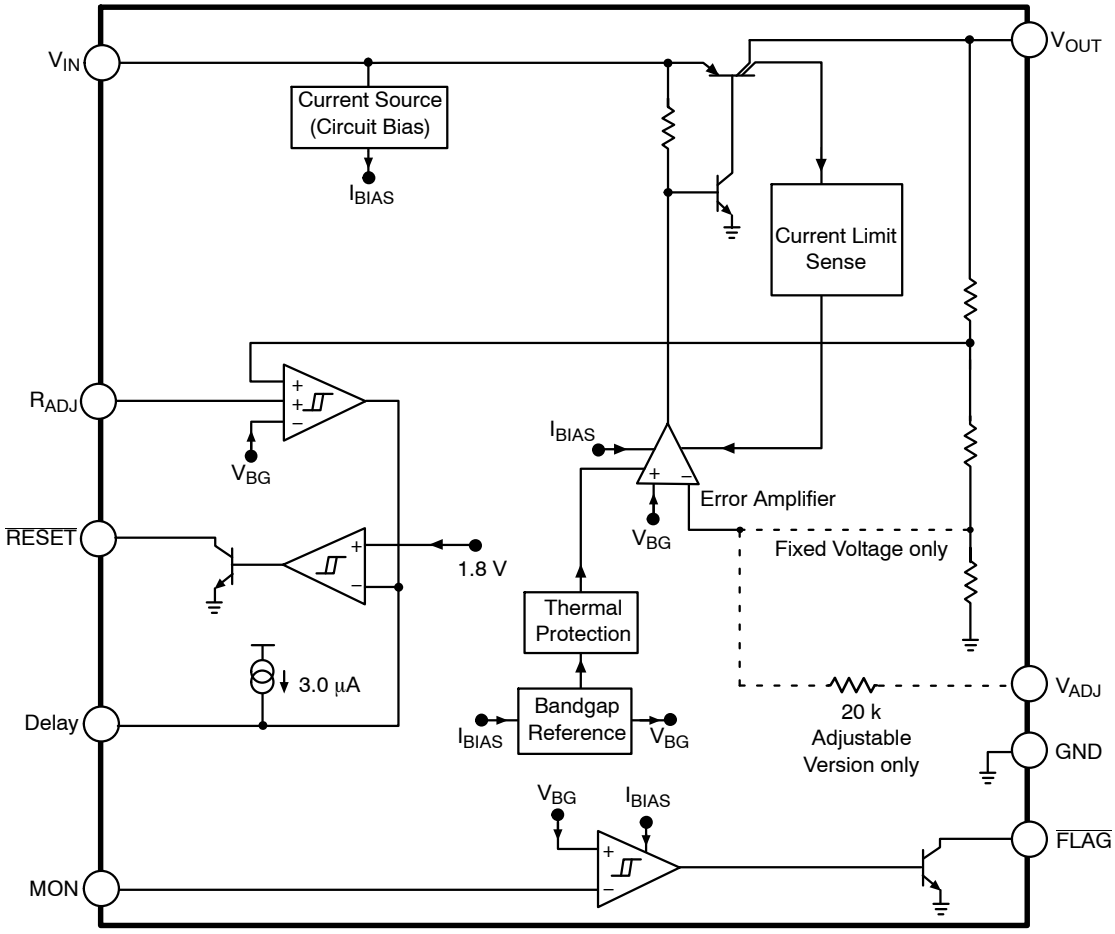

Figure 11. Block Diagram

CIRCUIT DESCRIPTION

REGULATOR CONTROL FUNCTIONS

The NCV8502 contains the microprocessor compatible control function $\overline{\text{RESET}}$ (Figure 12).

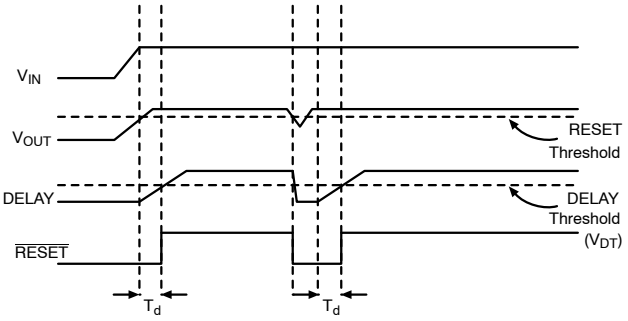

Figure 12. Reset and Delay Circuit Wave Forms

$\overline{\text{RESET}}$ Function

A $\overline{\text{RESET}}$ signal (low voltage) is generated as the IC powers up until V_{OUT} is within 6.0% of the regulated output voltage, or when V_{OUT} drops out of regulation,and is lower than 8.0% below the regulated output voltage. Hysteresis is included in the function to minimize oscillations.

The $\overline{\text{RESET}}$ output is an open collector NPN transistor, controlled by a low voltage detection circuit. The circuit is functionally independent of the rest of the IC thereby guaranteeing that the $\overline{\text{RESET}}$ signal is valid for V_{OUT} as low as 1.0 V.

Adjustable Reset Function

The reset threshold can be made lower by connecting an external resistor divider to the R_{ADJ} lead from the V_{OUT} lead, as displayed in Figure 13. This lead is grounded to select the default value of 4.6 V.

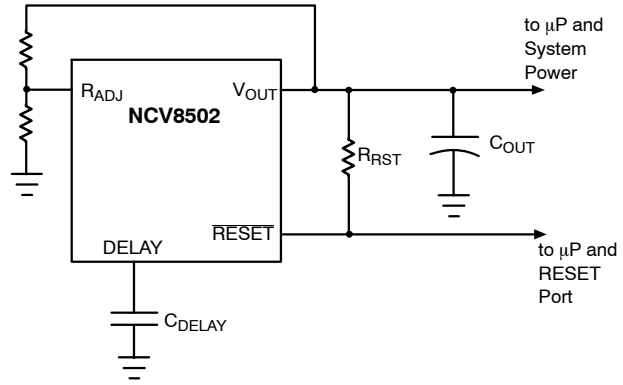

Figure 13. Adjustable $\overline{\text{RESET}}$

DELAY Function

The reset delay circuit provides a programmable (by external capacitor) delay on the $\overline{\text{RESET}}$ output lead.

The DELAY lead provides source current (typically 2.5 μA) to the external DELAY capacitor during the following proceedings:

1. During Power Up (once the regulation threshold has been verified).
2. After a reset event has occurred and the device is back in regulation. The DELAY capacitor is discharged when the regulation ($\overline{\text{RESET}}$ threshold) has been violated. This is a latched incident. The capacitor will fully discharge and wait for the device to regulate before going through the delay time event again.

$\overline{\text{FLAG}}$/Monitor Function

An on−chip comparator is provided to perform an early warning to the microprocessor of a possible reset signal. The reset signal typically turns the microprocessor off instantaneously. This can cause unpredictable results with the microprocessor. The signal received from the $\overline{\text{FLAG}}$ pin will allow the microprocessor time to complete its present task before shutting down. This function is performed by a comparator referenced to the bandgap reference. The actual trip point can be programmed externally using a resistor divider to the input monitor (MON) (Figure 14). The typical threshold is 1.20 V on the MON pin.

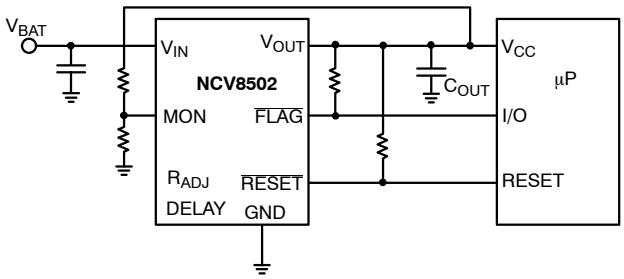

Figure 14. $\overline{\text{FLAG}}$/Monitor Function

Voltage Adjust

Figure 15 shows the device setup for a user configurable output voltage. The feedback to the V_{ADJ} pin is taken from a voltage divider referenced to the output voltage. The loop is balanced around the Unity Gain threshold (1.28 V typical).

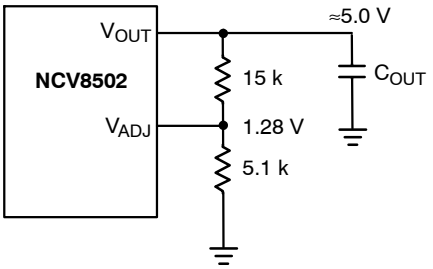

Figure 15. Adjustable Output Voltage

APPLICATION NOTES

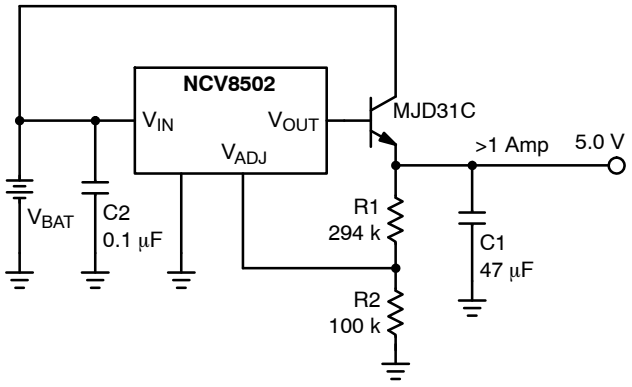

Figure 16. Additional Output Current

Adding Capability

Figure 16 shows how the adjustable version of parts can be used with an external pass transistor for additional current capability. The setup as shown will provide greater than 1 Amp of output current.

FLAG MONITOR

Figure 17 shows the FLAG Monitor waveforms as a result of the circuit depicted in Figure 14. As the output voltage falls (V_{OUT}), the Monitor threshold is crossed. This causes the voltage on the $\overline{FLAG}$ output to go low sending a warning signal to the microprocessor that a $\overline{RESET}$ signal may occur in a short period of time. $T_{WARNING}$ is the time the microprocessor has to complete the function it is currently working on and get ready for the $\overline{RESET}$ shutdown signal.

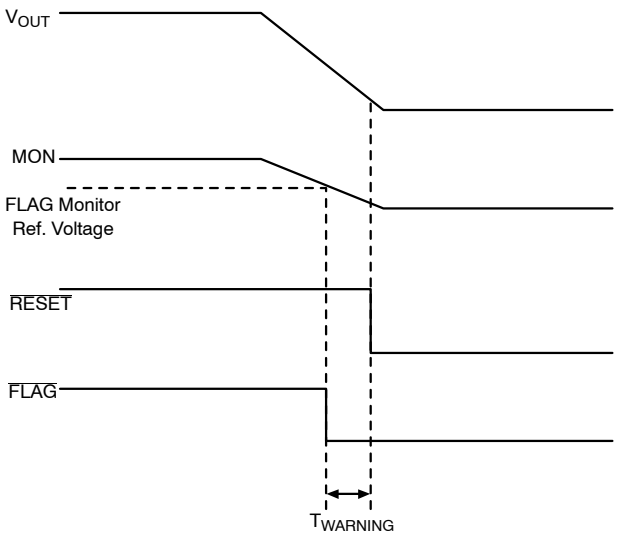

Figure 17. FLAG Monitor Circuit Waveform

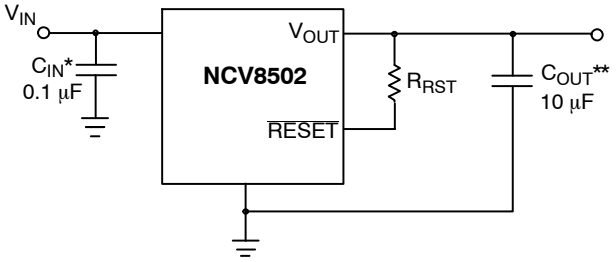

*C_{IN} required if regulator is located far from the power supply filter
**C_{OUT} required for stability. Capacitor must operate at minimum temperature expected

Figure 18. Test and Application Circuit Showing Output Compensation

SETTING THE DELAY TIME

The delay time is controlled by the Reset Delay Low Voltage, Delay Switching Threshold, and the Delay Charge Current. The delay follows the equation:

$$t_{DELAY} = \frac{[C_{DELAY}(V_{dt} - \text{Reset Delay Low Voltage})]}{\text{Delay Charge Current}}$$

Example:

Using C_{DELAY} = 33 nF.

Assume reset Delay Low Voltage = 0.

Use the typical value for V_{dt} = 1.8 V.

Use the typical value for Delay Charge Current = 2.5 μA.

$$t_{DELAY} = \frac{[33\ nF(1.8 - 0)]}{2.5\ \mu A} = 23.8\ ms$$

STABILITY CONSIDERATIONS

The output or compensation capacitor helps determine three main characteristics of a linear regulator: start−up delay, load transient response and loop stability.

The capacitor value and type should be based on cost, availability, size and temperature constraints.

The value for the output capacitor C_{OUT} shown in Figure 18 should work for most applications, however it is not necessarily the optimized solution.

CALCULATING POWER DISSIPATION IN A SINGLE OUTPUT LINEAR REGULATOR

The maximum power dissipation for a single output regulator (Figure 19) is:

$$P_{D(max)} = [V_{IN(max)} - V_{OUT(min)}]I_{OUT(max)} + V_{IN(max)}I_Q \quad \text{(eq. 1)}$$

where:

$V_{IN(max)}$ is the maximum input voltage,

$V_{OUT(min)}$ is the minimum output voltage,

$I_{OUT(max)}$ is the maximum output current for the application, and

I_Q is the quiescent current the regulator consumes at $I_{OUT(max)}$.

Once the value of $P_{D(max)}$ is known, the maximum permissible value of $R_{\theta JA}$ can be calculated:

$$R_{\Theta JA} = \frac{150^\circ C - T_A}{P_D} \quad \text{(eq. 2)}$$

The value of $R_{\theta JA}$ can then be compared with those in the package section of the data sheet. Those packages with $R_{\theta JA}$'s less than the calculated value in equation 2 will keep the die temperature below 150°C.

In some cases, none of the packages will be sufficient to dissipate the heat generated by the IC, and an external heatsink will be required.

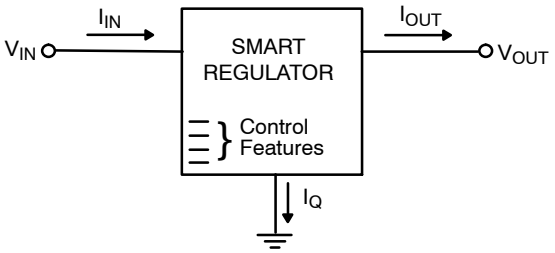

Figure 19. Single Output Regulator with Key Performance Parameters Labeled

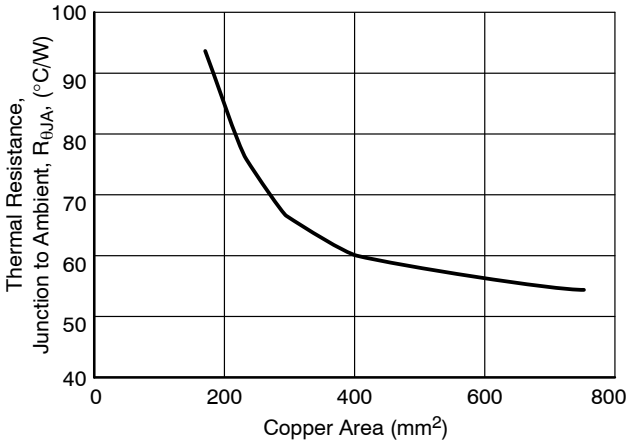

Figure 20. 16 Lead SOW (Exposed Pad), θJA as a Function of the Pad Copper Area (2 oz. Cu Thickness), Board Material = 0.0625″ G−10/R−4

HEAT SINKS

A heat sink effectively increases the surface area of the package to improve the flow of heat away from the IC and into the surrounding air.

Each material in the heat flow path between the IC and the outside environment will have a thermal resistance. Like series electrical resistances, these resistances are summed to determine the value of $R_{\theta JA}$:

$$R_{\theta JA} = R_{\theta JC} + R_{\theta CS} + R_{\theta SA} \quad \text{(eq. 3)}$$

where:

$R_{\theta JC}$ = the junction−to−case thermal resistance,

$R_{\theta CS}$ = the case−to−heatsink thermal resistance, and

$R_{\theta SA}$ = the heatsink−to−ambient thermal resistance.

$R_{\theta JC}$ appears in the package section of the data sheet. Like $R_{\theta JA}$, it too is a function of package type. $R_{\theta CS}$ and $R_{\theta SA}$ are functions of the package type, heatsink and the interface between them. These values appear in heat sink data sheets of heat sink manufacturers.

ORDERING INFORMATION

Device	Output Voltage	Package	Shipping†
NCV8502D50R2G	5.0 V	SO−8 (Pb−Free)	2500 Tape & Reel

DISCONTINUED (Note 6)

NCV8502DADJG	Adjustable	SO−8 (Pb−Free)	98 Units/Rail
NCV8502DADJR2G		SO−8 (Pb−Free)	2500 Tape & Reel
NCV8502PDWADJG		SOW−16 Exposed Pad (Pb−Free)	47 Units/Rail
NCV8502PDWADJR2G		SOW−16 Exposed Pad (Pb−Free)	1000 Tape & Reel
NCV8502D25G	2.5 V	SO−8 (Pb−Free)	98 Units/Rail
NCV8502D25R2G		SO−8 (Pb−Free)	2500 Tape & Reel
NCV8502PDW25G		SOW−16 Exposed Pad (Pb−Free)	47 Units/Rail
NCV8502PDW25R2G		SOW−16 Exposed Pad (Pb−Free)	1000 Tape & Reel
NCV8502D33G	3.3 V	SO−8 (Pb−Free)	98 Units/Rail
NCV8502D33R2G		SO−8 (Pb−Free)	2500 Tape & Reel
NCV8502PDW33G		SOW−16 Exposed Pad (Pb−Free)	47 Units/Rail
NCV8502PDW33R2G		SOW−16 Exposed Pad (Pb−Free)	1000 Tape & Reel
NCV8502D50G	5.0 V	SO−8 (Pb−Free)	98 Units/Rail
NCV8502PDW50G		SOW−16 Exposed Pad (Pb−Free)	47 Units/Rail
NCV8502PDW50R2G		SOW−16 Exposed Pad (Pb−Free)	1000 Tape & Reel
NCV8502D80G	8.0 V	SO−8 (Pb−Free)	98 Units/Rail
NCV8502D80R2G		SO−8 (Pb−Free)	2500 Tape & Reel
NCV8502PDW80G		SOW−16 Exposed Pad (Pb−Free)	47 Units/Rail
NCV8502PDW80R2G		SOW−16 Exposed Pad (Pb−Free)	1000 Tape & Reel
NCV8502D100G	10 V	SO−8 (Pb−Free)	98 Units/Rail
NCV8502D100R2G		SO−8 (Pb−Free)	2500 Tape & Reel
NCV8502PDW100G		SOW−16 Exposed Pad (Pb−Free)	47 Units/Rail
NCV8502PDW100R2G		SOW−16 Exposed Pad (Pb−Free)	1000 Tape & Reel

†For information on tape and reel specifications, including part orientation and tape sizes, please refer to our Tape and Reel Packaging Specification Brochure, BRD8011/D.

6. **DISCONTINUED:** These devices are not recommended for new design. Please contact your **onsemi** representative for information. The most current information on these devices may be available on www.onsemi.com.

MECHANICAL CASE OUTLINE
PACKAGE DIMENSIONS



SCALE 1:1

SOIC−8 NB
CASE 751−07
ISSUE AK

DATE 16 FEB 2011

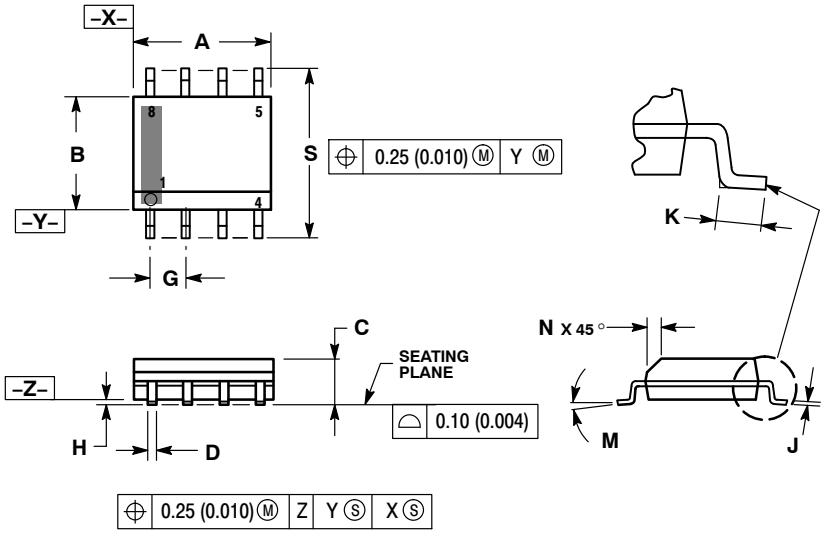

NOTES:
1. DIMENSIONING AND TOLERANCING PER ANSI Y14.5M, 1982.
2. CONTROLLING DIMENSION: MILLIMETER.
3. DIMENSION A AND B DO NOT INCLUDE MOLD PROTRUSION.
4. MAXIMUM MOLD PROTRUSION 0.15 (0.006) PER SIDE.
5. DIMENSION D DOES NOT INCLUDE DAMBAR PROTRUSION. ALLOWABLE DAMBAR PROTRUSION SHALL BE 0.127 (0.005) TOTAL IN EXCESS OF THE D DIMENSION AT MAXIMUM MATERIAL CONDITION.
6. 751−01 THRU 751−06 ARE OBSOLETE. NEW STANDARD IS 751−07.

	MILLIMETERS		INCHES	
DIM	MIN	MAX	MIN	MAX
A	4.80	5.00	0.189	0.197
B	3.80	4.00	0.150	0.157
C	1.35	1.75	0.053	0.069
D	0.33	0.51	0.013	0.020
G	1.27 BSC		0.050 BSC	
H	0.10	0.25	0.004	0.010
J	0.19	0.25	0.007	0.010
K	0.40	1.27	0.016	0.050
M	0 °	8 °	0 °	8 °
N	0.25	0.50	0.010	0.020
S	5.80	6.20	0.228	0.244

SOLDERING FOOTPRINT*

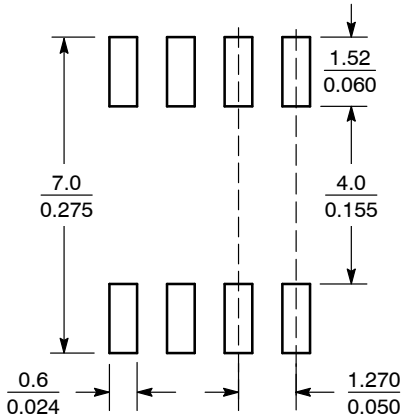

SCALE 6:1 (mm / inches)

*For additional information on our Pb−Free strategy and soldering details, please download the ON Semiconductor Soldering and Mounting Techniques Reference Manual, SOLDERRM/D.

GENERIC MARKING DIAGRAM*

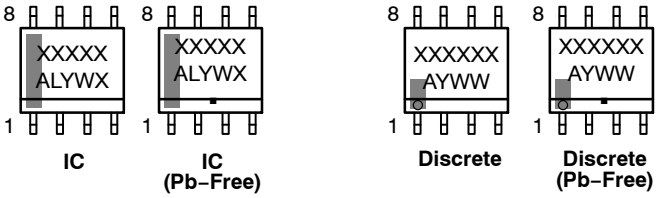

IC | IC (Pb−Free) | Discrete | Discrete (Pb−Free)

XXXXX = Specific Device Code
A = Assembly Location
L = Wafer Lot
Y = Year
W = Work Week
▪ = Pb−Free Package

XXXXXX = Specific Device Code
A = Assembly Location
Y = Year
WW = Work Week
▪ = Pb−Free Package

*This information is generic. Please refer to device data sheet for actual part marking. Pb−Free indicator, "G" or microdot "▪", may or may not be present. Some products may not follow the Generic Marking.

STYLES ON PAGE 2

DOCUMENT NUMBER:	**98ASB42564B**	Electronic versions are uncontrolled except when accessed directly from the Document Repository. Printed versions are uncontrolled except when stamped "CONTROLLED COPY" in red.
DESCRIPTION:	**SOIC−8 NB**	**PAGE 1 OF 2**

onsemi and onsemi are trademarks of Semiconductor Components Industries, LLC dba **onsemi** or its subsidiaries in the United States and/or other countries. **onsemi** reserves the right to make changes without further notice to any products herein. **onsemi** makes no warranty, representation or guarantee regarding the suitability of its products for any particular purpose, nor does **onsemi** assume any liability arising out of the application or use of any product or circuit, and specifically disclaims any and all liability, including without limitation special, consequential or incidental damages. **onsemi** does not convey any license under its patent rights nor the rights of others.

© Semiconductor Components Industries, LLC, 2019

SOIC−8 NB
CASE 751−07
ISSUE AK

DATE 16 FEB 2011

STYLE 1:
PIN 1. EMITTER
2. COLLECTOR
3. COLLECTOR
4. EMITTER
5. EMITTER
6. BASE
7. BASE
8. EMITTER

STYLE 2:
PIN 1. COLLECTOR, DIE, #1
2. COLLECTOR, #1
3. COLLECTOR, #2
4. COLLECTOR, #2
5. BASE, #2
6. EMITTER, #2
7. BASE, #1
8. EMITTER, #1

STYLE 3:
PIN 1. DRAIN, DIE #1
2. DRAIN, #1
3. DRAIN, #2
4. DRAIN, #2
5. GATE, #2
6. SOURCE, #2
7. GATE, #1
8. SOURCE, #1

STYLE 4:
PIN 1. ANODE
2. ANODE
3. ANODE
4. ANODE
5. ANODE
6. ANODE
7. ANODE
8. COMMON CATHODE

STYLE 5:
PIN 1. DRAIN
2. DRAIN
3. DRAIN
4. DRAIN
5. GATE
6. GATE
7. SOURCE
8. SOURCE

STYLE 6:
PIN 1. SOURCE
2. DRAIN
3. DRAIN
4. SOURCE
5. SOURCE
6. GATE
7. GATE
8. SOURCE

STYLE 7:
PIN 1. INPUT
2. EXTERNAL BYPASS
3. THIRD STAGE SOURCE
4. GROUND
5. DRAIN
6. GATE 3
7. SECOND STAGE Vd
8. FIRST STAGE Vd

STYLE 8:
PIN 1. COLLECTOR, DIE #1
2. BASE, #1
3. BASE, #2
4. COLLECTOR, #2
5. COLLECTOR, #2
6. EMITTER, #2
7. EMITTER, #1
8. COLLECTOR, #1

STYLE 9:
PIN 1. EMITTER, COMMON
2. COLLECTOR, DIE #1
3. COLLECTOR, DIE #2
4. EMITTER, COMMON
5. EMITTER, COMMON
6. BASE, DIE #2
7. BASE, DIE #1
8. EMITTER, COMMON

STYLE 10:
PIN 1. GROUND
2. BIAS 1
3. OUTPUT
4. GROUND
5. GROUND
6. BIAS 2
7. INPUT
8. GROUND

STYLE 11:
PIN 1. SOURCE 1
2. GATE 1
3. SOURCE 2
4. GATE 2
5. DRAIN 2
6. DRAIN 2
7. DRAIN 1
8. DRAIN 1

STYLE 12:
PIN 1. SOURCE
2. SOURCE
3. SOURCE
4. GATE
5. DRAIN
6. DRAIN
7. DRAIN
8. DRAIN

STYLE 13:
PIN 1. N.C.
2. SOURCE
3. SOURCE
4. GATE
5. DRAIN
6. DRAIN
7. DRAIN
8. DRAIN

STYLE 14:
PIN 1. N−SOURCE
2. N−GATE
3. P−SOURCE
4. P−GATE
5. P−DRAIN
6. P−DRAIN
7. N−DRAIN
8. N−DRAIN

STYLE 15:
PIN 1. ANODE 1
2. ANODE 1
3. ANODE 1
4. ANODE 1
5. CATHODE, COMMON
6. CATHODE, COMMON
7. CATHODE, COMMON
8. CATHODE, COMMON

STYLE 16:
PIN 1. EMITTER, DIE #1
2. BASE, DIE #1
3. EMITTER, DIE #2
4. BASE, DIE #2
5. COLLECTOR, DIE #2
6. COLLECTOR, DIE #2
7. COLLECTOR, DIE #1
8. COLLECTOR, DIE #1

STYLE 17:
PIN 1. VCC
2. V2OUT
3. V1OUT
4. TXE
5. RXE
6. VEE
7. GND
8. ACC

STYLE 18:
PIN 1. ANODE
2. ANODE
3. SOURCE
4. GATE
5. DRAIN
6. DRAIN
7. CATHODE
8. CATHODE

STYLE 19:
PIN 1. SOURCE 1
2. GATE 1
3. SOURCE 2
4. GATE 2
5. DRAIN 2
6. MIRROR 2
7. DRAIN 1
8. MIRROR 1

STYLE 20:
PIN 1. SOURCE (N)
2. GATE (N)
3. SOURCE (P)
4. GATE (P)
5. DRAIN
6. DRAIN
7. DRAIN
8. DRAIN

STYLE 21:
PIN 1. CATHODE 1
2. CATHODE 2
3. CATHODE 3
4. CATHODE 4
5. CATHODE 5
6. COMMON ANODE
7. COMMON ANODE
8. CATHODE 6

STYLE 22:
PIN 1. I/O LINE 1
2. COMMON CATHODE/VCC
3. COMMON CATHODE/VCC
4. I/O LINE 3
5. COMMON ANODE/GND
6. I/O LINE 4
7. I/O LINE 5
8. COMMON ANODE/GND

STYLE 23:
PIN 1. LINE 1 IN
2. COMMON ANODE/GND
3. COMMON ANODE/GND
4. LINE 2 IN
5. LINE 2 OUT
6. COMMON ANODE/GND
7. COMMON ANODE/GND
8. LINE 1 OUT

STYLE 24:
PIN 1. BASE
2. EMITTER
3. COLLECTOR/ANODE
4. COLLECTOR/ANODE
5. CATHODE
6. CATHODE
7. COLLECTOR/ANODE
8. COLLECTOR/ANODE

STYLE 25:
PIN 1. VIN
2. N/C
3. REXT
4. GND
5. IOUT
6. IOUT
7. IOUT
8. IOUT

STYLE 26:
PIN 1. GND
2. dv/dt
3. ENABLE
4. ILIMIT
5. SOURCE
6. SOURCE
7. SOURCE
8. VCC

STYLE 27:
PIN 1. ILIMIT
2. OVLO
3. UVLO
4. INPUT+
5. SOURCE
6. SOURCE
7. SOURCE
8. DRAIN

STYLE 28:
PIN 1. SW_TO_GND
2. DASIC_OFF
3. DASIC_SW_DET
4. GND
5. V_MON
6. VBULK
7. VBULK
8. VIN

STYLE 29:
PIN 1. BASE, DIE #1
2. EMITTER, #1
3. BASE, #2
4. EMITTER, #2
5. COLLECTOR, #2
6. COLLECTOR, #2
7. COLLECTOR, #1
8. COLLECTOR, #1

STYLE 30:
PIN 1. DRAIN 1
2. DRAIN 1
3. GATE 2
4. SOURCE 2
5. SOURCE 1/DRAIN 2
6. SOURCE 1/DRAIN 2
7. SOURCE 1/DRAIN 2
8. GATE 1

DOCUMENT NUMBER:	**98ASB42564B**	Electronic versions are uncontrolled except when accessed directly from the Document Repository. Printed versions are uncontrolled except when stamped "CONTROLLED COPY" in red.	
DESCRIPTION:	**SOIC−8 NB**		**PAGE 2 OF 2**

onsemi and ONSEMI. are trademarks of Semiconductor Components Industries, LLC dba **onsemi** or its subsidiaries in the United States and/or other countries. **onsemi** reserves the right to make changes without further notice to any products herein. **onsemi** makes no warranty, representation or guarantee regarding the suitability of its products for any particular purpose, nor does **onsemi** assume any liability arising out of the application or use of any product or circuit, and specifically disclaims any and all liability, including without limitation special, consequential or incidental damages. **onsemi** does not convey any license under its patent rights nor the rights of others.

© Semiconductor Components Industries, LLC, 2019

SOIC 16 LEAD WIDE BODY, EXPOSED PAD

CASE 751AG
ISSUE B

DATE 31 MAY 2016

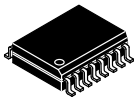

SCALE 1:1

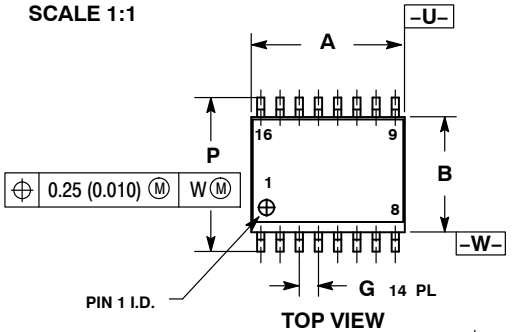

TOP VIEW

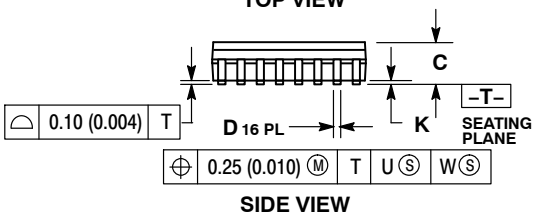

SIDE VIEW

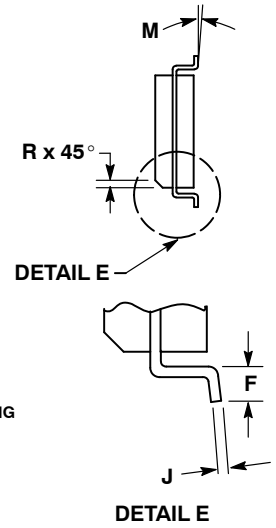

DETAIL E

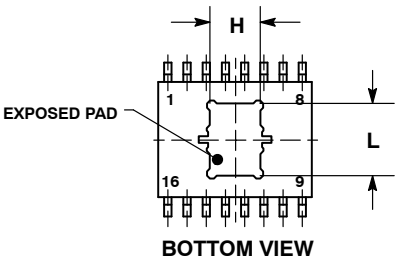

BOTTOM VIEW

SOLDERING FOOTPRINT*

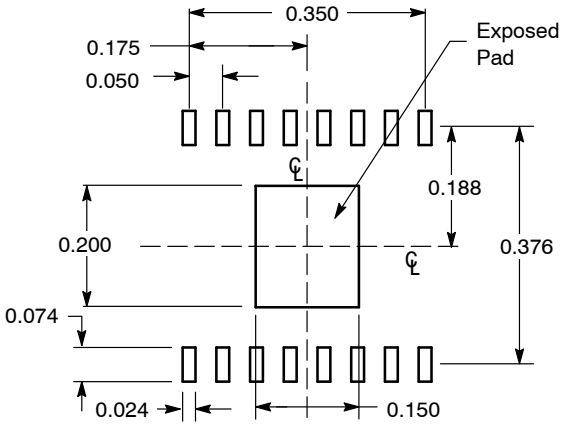

DIMENSIONS: INCHES

*For additional information on our Pb–Free strategy and soldering details, please download the ON Semiconductor Soldering and Mounting Techniques Reference Manual, SOLDERRM/D.

NOTES:
1. DIMENSIONING AND TOLERANCING PER ANSI Y14.5M, 1982.
2. CONTROLLING DIMENSION: MILLIMETER.
3. DIMENSION A AND B DO NOT INCLUDE MOLD PROTRUSION.
4. MAXIMUM MOLD PROTRUSION 0.15 (0.006) PER SIDE.
5. DIMENSION D DOES NOT INCLUDE DAMBAR PROTRUSION. ALLOWABLE PROTRUSION SHALL BE 0.13 (0.005) TOTAL IN EXCESS OF THE D DIMENSION AT MAXIMUM MATERIAL CONDITION.
6. 751R–01 OBSOLETE, NEW STANDARD 751R–02.

	MILLIMETERS		INCHES	
DIM	MIN	MAX	MIN	MAX
A	10.15	10.45	0.400	0.411
B	7.40	7.60	0.292	0.299
C	2.35	2.65	0.093	0.104
D	0.35	0.49	0.014	0.019
F	0.50	0.90	0.020	0.035
G	1.27 BSC		0.050 BSC	
H	3.45	3.66	0.136	0.144
J	0.25	0.32	0.010	0.012
K	0.00	0.10	0.000	0.004
L	4.72	4.93	0.186	0.194
M	0 °	7 °	0 °	7 °
P	10.05	10.55	0.395	0.415
R	0.25	0.75	0.010	0.029

GENERIC MARKING DIAGRAM*

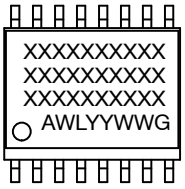

XXXXX = Specific Device Code
A = Assembly Location
WL = Wafer Lot
YY = Year
WW = Work Week
G = Pb–Free Package

*This information is generic. Please refer to device data sheet for actual part marking. Pb–Free indicator, “G” or microdot “ ▪”, may or may not be present.

DOCUMENT NUMBER:	**98AON21237D**	Electronic versions are uncontrolled except when accessed directly from the Document Repository. Printed versions are uncontrolled except when stamped “CONTROLLED COPY” in red.
DESCRIPTION:	**SOIC–16, WB EXPOSED PAD**	**PAGE 1 OF 1**

ON Semiconductor and ON are trademarks of Semiconductor Components Industries, LLC dba ON Semiconductor or its subsidiaries in the United States and/or other countries. ON Semiconductor reserves the right to make changes without further notice to any products herein. ON Semiconductor makes no warranty, representation or guarantee regarding the suitability of its products for any particular purpose, nor does ON Semiconductor assume any liability arising out of the application or use of any product or circuit, and specifically disclaims any and all liability, including without limitation special, consequential or incidental damages. ON Semiconductor does not convey any license under its patent rights nor the rights of others.

© Semiconductor Components Industries, LLC, 2019

onsemi, , and other names, marks, and brands are registered and/or common law trademarks of Semiconductor Components Industries, LLC dba "**onsemi**" or its affiliates and/or subsidiaries in the United States and/or other countries. **onsemi** owns the rights to a number of patents, trademarks, copyrights, trade secrets, and other intellectual property. A listing of **onsemi**'s product/patent coverage may be accessed at www.onsemi.com/site/pdf/Patent−Marking.pdf. **onsemi** reserves the right to make changes at any time to any products or information herein, without notice. The information herein is provided "as−is" and **onsemi** makes no warranty, representation or guarantee regarding the accuracy of the information, product features, availability, functionality, or suitability of its products for any particular purpose, nor does **onsemi** assume any liability arising out of the application or use of any product or circuit, and specifically disclaims any and all liability, including without limitation special, consequential or incidental damages. Buyer is responsible for its products and applications using **onsemi** products, including compliance with all laws, regulations and safety requirements or standards, regardless of any support or applications information provided by **onsemi**. "Typical" parameters which may be provided in **onsemi** data sheets and/or specifications can and do vary in different applications and actual performance may vary over time. All operating parameters, including "Typicals" must be validated for each customer application by customer's technical experts. **onsemi** does not convey any license under any of its intellectual property rights nor the rights of others. **onsemi** products are not designed, intended, or authorized for use as a critical component in life support systems or any FDA Class 3 medical devices or medical devices with a same or similar classification in a foreign jurisdiction or any devices intended for implantation in the human body. Should Buyer purchase or use **onsemi** products for any such unintended or unauthorized application, Buyer shall indemnify and hold **onsemi** and its officers, employees, subsidiaries, affiliates, and distributors harmless against all claims, costs, damages, and expenses, and reasonable attorney fees arising out of, directly or indirectly, any claim of personal injury or death associated with such unintended or unauthorized use, even if such claim alleges that **onsemi** was negligent regarding the design or manufacture of the part. **onsemi** is an Equal Opportunity/Affirmative Action Employer. This literature is subject to all applicable copyright laws and is not for resale in any manner.

ADDITIONAL INFORMATION

TECHNICAL PUBLICATIONS:
Technical Library: www.onsemi.com/design/resources/technical−documentation
onsemi Website: www.onsemi.com

ONLINE SUPPORT: www.onsemi.com/support
For additional information, please contact your local Sales Representative at www.onsemi.com/support/sales