# NLAS2750

# Low Voltage Dual SPDT Analog Switch with Negative Swing Audio Capability

The NLAS2750 is a dual SPDT low on−resistance analog switch. It can operate from a single 1.8 V to 5.0 V power supply. It is a bi−directional switch that can switch a negative voltage swing audio signal without requiring a coupling capacitor. With a single power supply, the audio signal can swing over the range from −2.5 V to $V_{CC}$.

### Features

- Capable to Switch Negative Swing Audio Signals Without Requiring a DC Blocking Capacitor
- Low On−resistance ($R_{ON}$)
- Low Voltage Digital Control Logic: ($V_{INH}$ = 1.4 V @ $V_{CC}$ = 2.7 V to 4.3 V)
- Low Power Consumption ($I_{CC} \leq$ 250 nA)
- Space Saving 1.4 mm x 1.8 mm Package UQFN Package
- This is a Pb−Free Device

### Typical Applications

- Cellular Phones
- Portable Media Players

ON Semiconductor®

www.onsemi.com

**MARKING DIAGRAM**

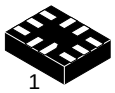


**UQFN10**
**CASE 488AT**




AL = Specific Device Code
M = Date Code/Assembly Location
▪ = Pb−Free Device

(Note: Microdot may be in either location)

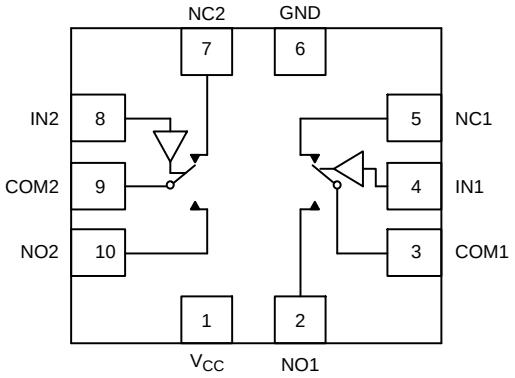


### FUNCTION TABLE

| IN1 (Pin 4) | IN2 (Pin 8) | Function |
|---|---|---|
| 0 | X | COM1 = NC1 |
| 1 | X | COM1 = NO1 |
| X | 0 | COM2 = NC2 |
| X | 1 | COM2 = NO2 |

### ORDERING INFORMATION

See detailed ordering and shipping information on page 7 of this data sheet.

© Semiconductor Components Industries, LLC, 2015

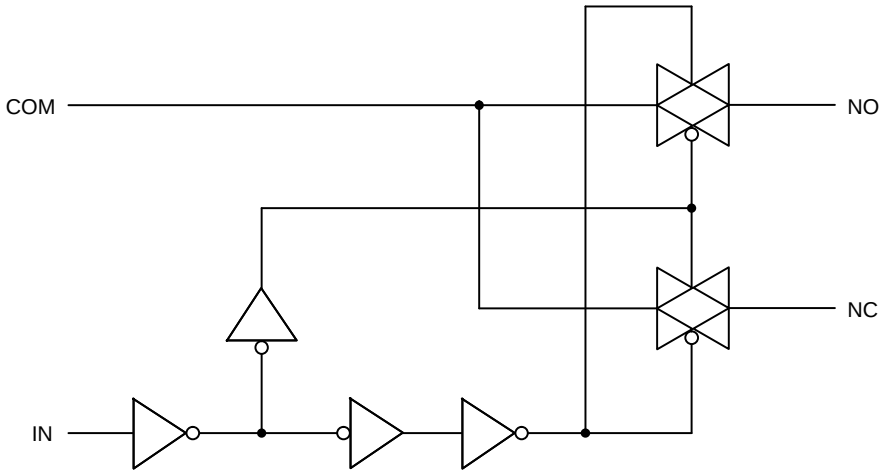


**Figure 1. Logic Equivalent Circuit**

## MAXIMUM RATINGS

| Symbol | Parameter | Value | Unit |
|---|---|---|---|
| $V_{CC}$ | Positive DC Supply Voltage | −0.3 to +6.5 | V |
| $V_{IS}$ | Analog Input Voltage (COM, NO, NC) (Notes 1 and 2) | Min. $V_{IS} = V_{CC}$ − 6.5 V or −2.5 V (whichever is greater)<br>Max. $V_{IS} = V_{CC}$ + 0.3 V | V |
| $V_{IN}$ | Digital (IN1, IN2) | −0.3 to +6.5 | V |
| $I_{CC}$ | Current (GND, $V_{CC}$) | 50 | mA |
| $I_{IS}$ | Continuous Switch Current (COM, NO, NC) (Note 1) | ±250 | mA |
| $I_{ISP}$ | Peak Switch Current (Pulsed at 1 ms, 10% Duty Cycle) | ±500 | mA |
| $T_{STG}$ | Storage Temperature | −65 to +150 | °C |
| $P_D$ | Power Dissipation | 200 | mW |
| $V_{ESD}$ | ESD (Human Body Model)<br>All pins<br>I/O to GND | <br>6<br>8 | kV |
| $I_{LU}$ | Latch−up (per JESD78) | 300 | mA |

Stresses exceeding those listed in the Maximum Ratings table may damage the device. If any of these limits are exceeded, device functionality should not be assumed, damage may occur and reliability may be affected.

1. Signals on COM, NO, NC, exceeding $V_{CC}$ will be clamped by internal diodes. Limit forward diode current to maximum current ratings.
2. The algebraic convention whereby the most negative value is a minimum and the most positive a maximum is used in this data sheet.

## RECOMMENDED OPERATING CONDITIONS

| Symbol | Parameter | Min | Max | Unit |
|---|---|---|---|---|
| $V_{CC}$ | Power Supply Range | 1.8 | 5.5 | V |
| $V_{IN}$ | Digital Select Input Voltage Overvoltage Tolerance (OVT) (IN1, IN2) | GND | 5.5 | V |
| $V_{IS}$ | Analog Input Voltage (NC, NO, COM) (Note 3) | −2.5 | $V_{CC}$ | V |
| $T_A$ | Operating Temperature Range | −40 | +85 | °C |
| $t_r$, $t_f$ | Input Rise or Fall Time (IN1, IN2)<br>$V_{CC}$ < 2.7 V<br>$V_{CC}$ ≥ 2.7 V | | <br>20<br>10 | ns/V |

Functional operation above the stresses listed in the Recommended Operating Ranges is not implied. Extended exposure to stresses beyond the Recommended Operating Ranges limits may affect device reliability.

3. The voltage across the switch should be ≤ 5.5 V.

**ELECTRICAL CHARACTERISTICS** ($V_{CC}$ = 2.7 V, ±10%) (Note 4)

| Symbol | Parameter | Test Conditions | Guaranteed Maximum Limit −40°C to 85°C Min | Typ | Max | Unit |
|---|---|---|---|---|---|---|
| **ANALOG SWITCH** | | | | | | |
| $V_{IS}$ | Analog Signal Range (Note 5) | | −2.5 | | $V_{CC}$ | V |
| $R_{DS(on)}$ | On−Resistance | $V_{CC}$ = 2.7 V, $V_{IS}$ = ($V_{CC}$ − 4.5 V), −1 V, 0 V 1 V, 2 V, $V_{CC}$ $I_{IS}$ = 100 mA | | 0.6 | 1.3 | Ω |
| $\Delta R_{ON}$ | On−Resistance Match | | | 0.1 | | Ω |
| $R_{ON}$ Flatness | On−Resistance Resistance Flatness | | | 0.37 | | Ω |
| $I_{NO/NC(off)}$ | Switch Off Leakage Current | $V_{CC}$ = 2.7 V, $V_{NC/NO}$ = −2.5 V or 2.5 V, $V_{COM}$ = 2.5 V or −2.5 V | | 50 | | nA |
| $I_{COM(off)}$ | | | | | ±250 | nA |
| $I_{COM(on)}$ | Channel On Leakage Current | | | 50 | ±250 | nA |
| **DIGITAL CONTROL** | | | | | | |
| $V_{INH}$ | Input Voltage High | $V_{CC}$ = 5 V $V_{CC}$ = 2.7 V to 4.3 V | 1.6 1.4 | | | V |
| $V_{INL}$ | Input Voltage Low | $V_{CC}$ = 2.7 V to 5 V | | | 0.6 | V |
| $C_{IN}$ | Input Capacitance | | | 5 | | pF |
| $I_{INL}$ or $I_{INH}$ | Input Current | $V_{IN}$ = 0 or $V_{CC}$ | | | ±1 | μA |
| **POWER CONSUMPTION** | | | | | | |
| $I_{CC}$ | Maximum Quiescent Supply Current | $V_{CC}$ = 2.7 V to 4.3 V | | 50 | ±250 | nA |

Product parametric performance is indicated in the Electrical Characteristics for the listed test conditions, unless otherwise noted. Product performance may not be indicated by the Electrical Characteristics if operated under different conditions.

4. Typical values are measured at 25°C and are for design aid only, not guaranteed nor subject to production testing.
5. Guaranteed by design, not subject to production testing.

**DYNAMIC CHARACTERISTICS** ($V_{CC}$ = 2.7 V, ±10%) (Note 4)

| Symbol | Parameter | Test Conditions | Guaranteed Maximum Limit −40°C to 85°C Min | Typ | Max | Unit |
|---|---|---|---|---|---|---|
| $t_{BBM}$ | Break−Before−Make Time (Notes 6 and 7) | $V_{CC}$ = 2.7 V, $V_{IS}$ = 1.5 V, $R_L$ = 50 Ω, $C_L$ = 35 pF | 1000 | 1250 | | ns |
| $t_{ON(EN)}$ | Enable Turn−On Time (Notes 6 and 7) | | | 80 | 150 | ns |
| $t_{OFF(EN)}$ | Enable Turn−Off Time (Notes 6 and 7) | | | 110 | 130 | ns |
| $Q_{INJ}$ | Charge Injection (Note 6) | $C_L$ = 1 nF, $R_{GEN}$ = 0 Ω, $V_{GEN}$ = 0 V | | 60 | | pC |
| OIRR | Off−Isolation (Note 6) | $V_{CC}$ = 2.7 V, $R_L$ = 50 Ω, $C_L$ = 5 pF, f = 300 kHz | | −58 | | dB |
| $X_{TALK}$ | Crosstalk (Notes 6 and 8) | | | −61 | | dB |
| BW | Bandwidth (Note 6) | $V_{CC}$ = 2.7 V, $R_L$ = 50 Ω, −3 dB | | 44 | | MHz |
| $C_{NC/NO(off)}$ | Channel−Off Capacitance (Note 6) | $V_{CC}$ = 2.7 V, f = 1 MHz | | 25 | | pF |
| $C_{COM/NC/NO(on)}$ | Channel−On Capacitance (Note 6) | | | 75 | | pF |

6. Guaranteed by design, not subject to production testing.
7. $V_{IS}$ = input voltage to perform proper function.
8. Crosstalk Measured between channels.

## TYPICAL CHARACTERISTICS

(25°C, unless otherwise specified)

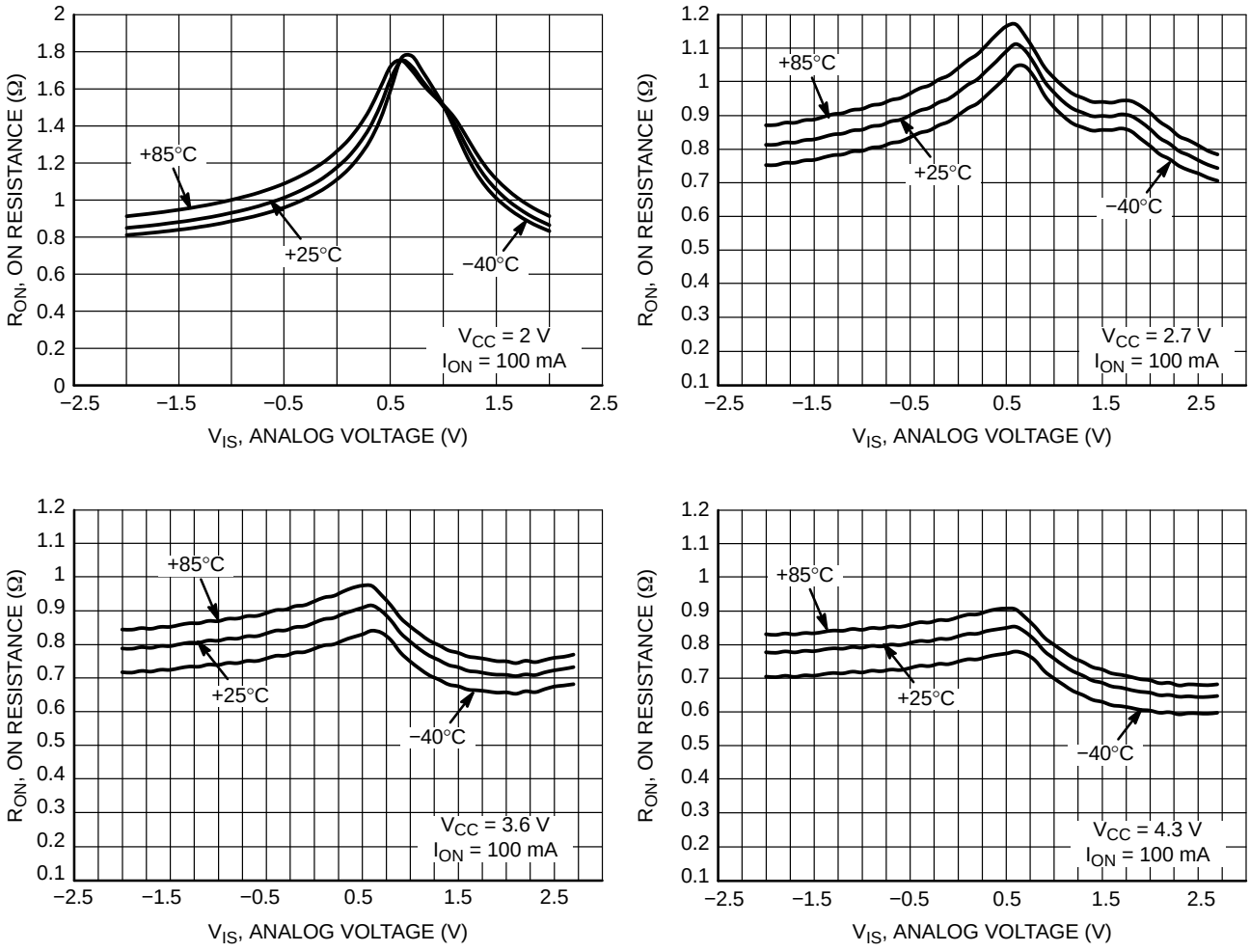


**Figure 2. On Resistance ($R_{ON}$) vs. Analog Input Voltage ($V_{IS}$)**

## TYPICAL CHARACTERISTICS

(25°C, unless otherwise specified)

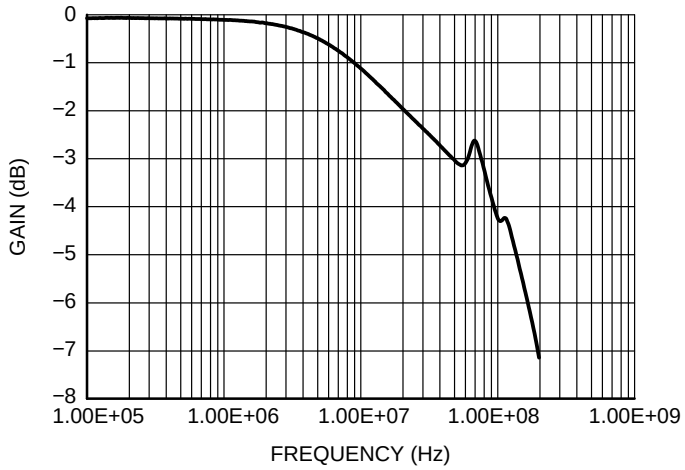


**Figure 3. Bandwidth Measurement − Gain vs. Frequency**

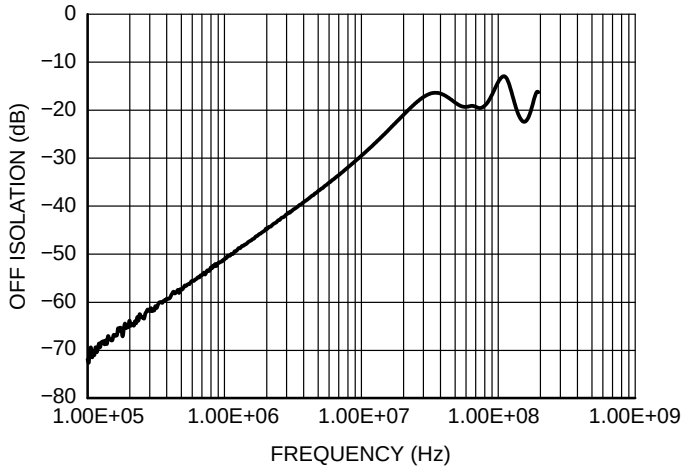


**Figure 4. Off Isolation Measurement**

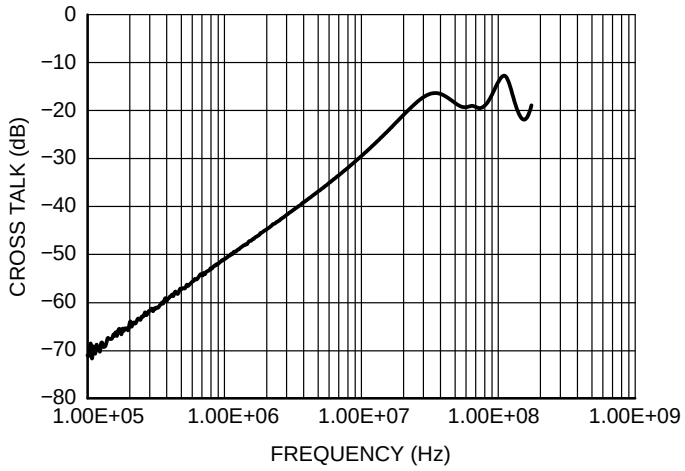


**Figure 5. Cross Talk Measurement**

## TEST CIRCUITS

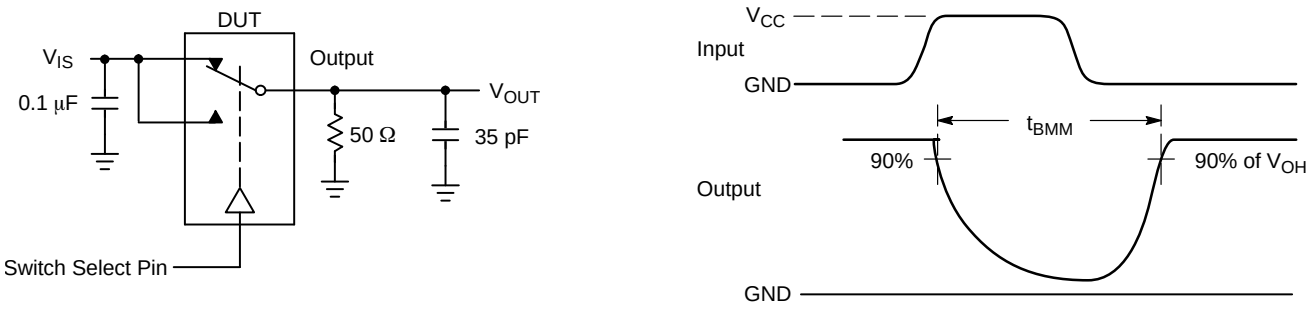


**Figure 6. $t_{BBM}$ (Time Break−Before−Make)**

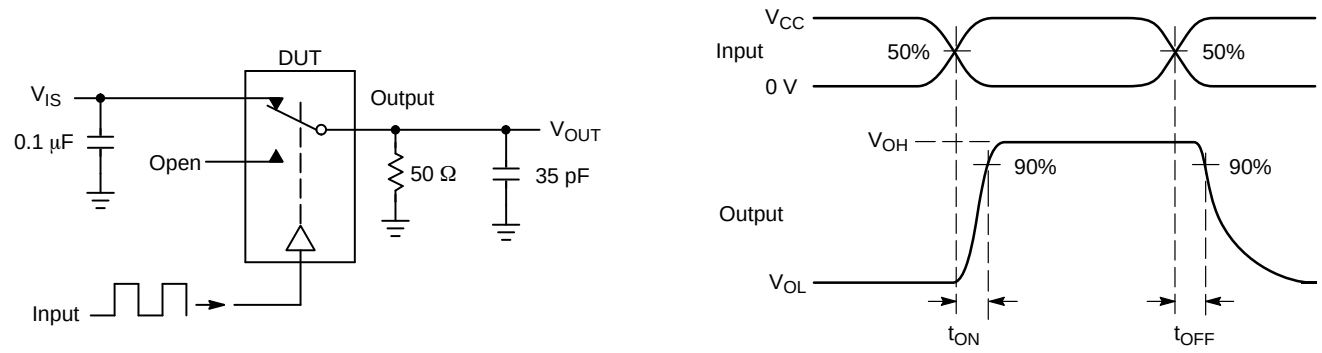


**Figure 7. $t_{ON}/t_{OFF}$**

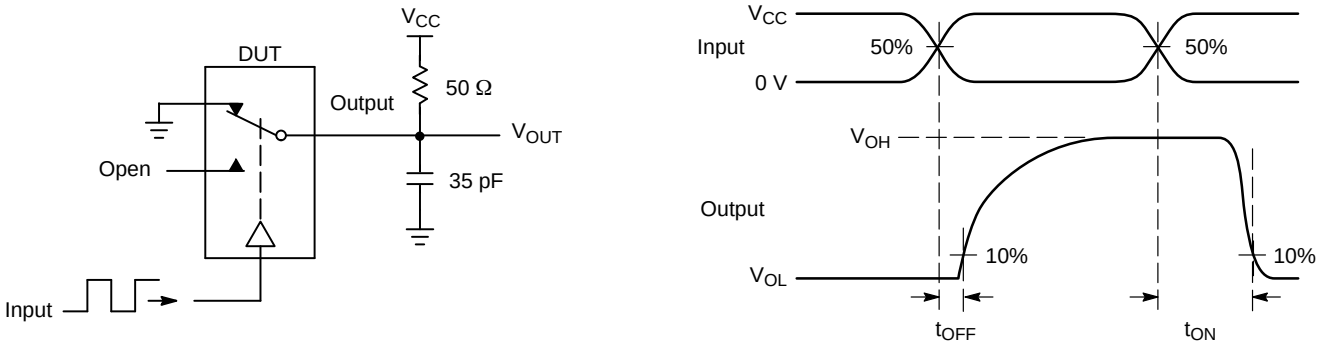


**Figure 8. $t_{ON}/t_{OFF}$**

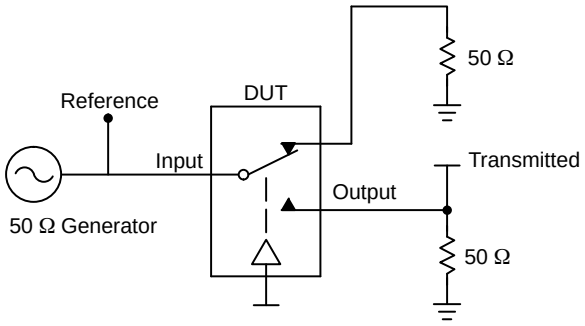


Channel switch control/s test socket is normalized. Off isolation is measured across an off channel. On loss is the bandwidth of an On switch. $V_{ISO}$, Bandwidth and $V_{ONL}$ are independent of the input signal direction.

$V_{ISO}$ = Off Channel Isolation = $20\ \text{Log}\left(\frac{V_{OUT}}{V_{IN}}\right)$ for $V_{IN}$ at 100 kHz

$V_{ONL}$ = On Channel Loss = $20\ \text{Log}\left(\frac{V_{OUT}}{V_{IN}}\right)$ for $V_{IN}$ at 100 kHz to 50 MHz

Bandwidth (BW) = the frequency 3 dB below $V_{ONL}$
$V_{CT}$ = Use $V_{ISO}$ setup and test to all other switch analog input/outputs terminated with 50 Ω

**Figure 9. Off Channel Isolation/On Channel Loss (BW)/Crosstalk (On Channel to Off Channel)/$V_{ONL}$**

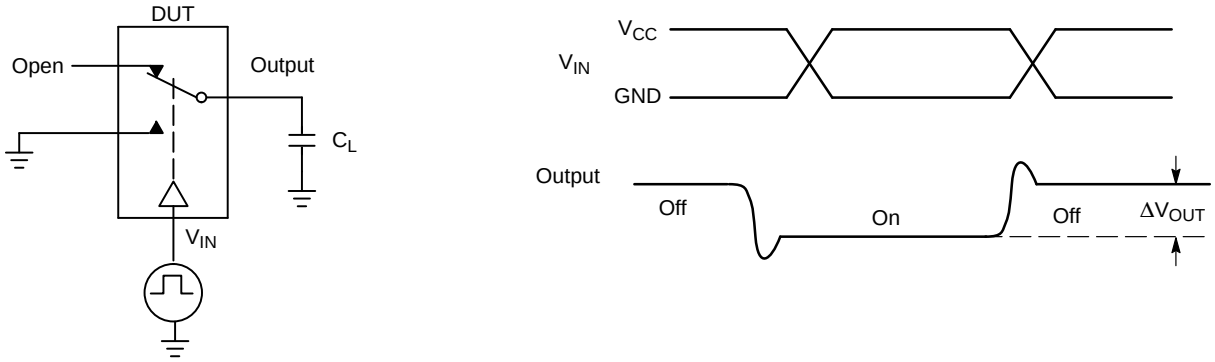


**Figure 10. Charge Injection: (Q)**

## ORDERING INFORMATION

| Device | Package | Shipping† |
|---|---|---|
| NLAS2750MUTAG | UQFN10<br>(Pb−Free) | 3000 / Tape & Reel |

†For information on tape and reel specifications, including part orientation and tape sizes, please refer to our Tape and Reel Packaging Specifications Brochure, BRD8011/D.

# MECHANICAL CASE OUTLINE
## PACKAGE DIMENSIONS

ON Semiconductor®

**UQFN10 1.4x1.8, 0.4P**
CASE 488AT−01
ISSUE A

DATE 01 AUG 2007

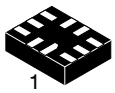

**SCALE 5:1**

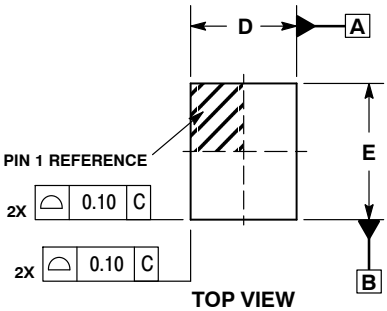


**TOP VIEW**

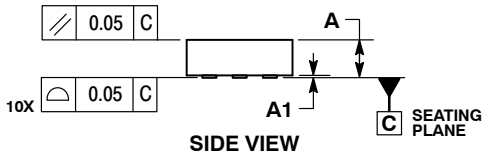


**SIDE VIEW**

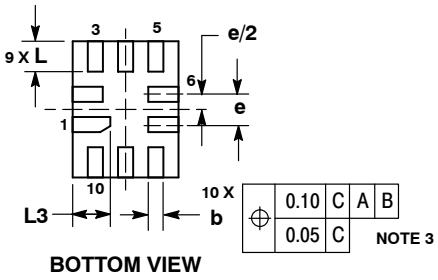


**BOTTOM VIEW**

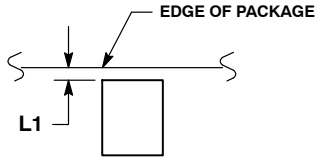


**DETAIL A**
**Bottom View**
**(Optional)**

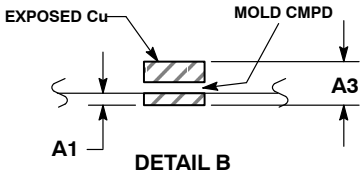


**DETAIL B**
**Side View**
**(Optional)**

NOTES:
1. DIMENSIONING AND TOLERANCING PER ASME Y14.5M, 1994.
2. CONTROLLING DIMENSION: MILLIMETERS
3. DIMENSION b APPLIES TO PLATED TERMINAL AND IS MEASURED BETWEEN 0.25 AND 0.30 MM FROM TERMINAL.
4. COPLANARITY APPLIES TO THE EXPOSED PAD AS WELL AS THE TERMINALS.

| | MILLIMETERS | |
|---|---|---|
| DIM | MIN | MAX |
| A | 0.45 | 0.60 |
| A1 | 0.00 | 0.05 |
| A3 | 0.127 REF | |
| b | 0.15 | 0.25 |
| D | 1.40 BSC | |
| E | 1.80 BSC | |
| e | 0.40 BSC | |
| L | 0.30 | 0.50 |
| L1 | 0.00 | 0.15 |
| L3 | 0.40 | 0.60 |

### GENERIC MARKING DIAGRAM*

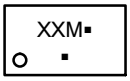


XX = Specific Device Code
M = Date Code
▪ = Pb−Free Package
(Note: Microdot may be in either location)

*This information is generic. Please refer to device data sheet for actual part marking. Pb−Free indicator, “G” or microdot “ ▪”, may or may not be present.

### MOUNTING FOOTPRINT

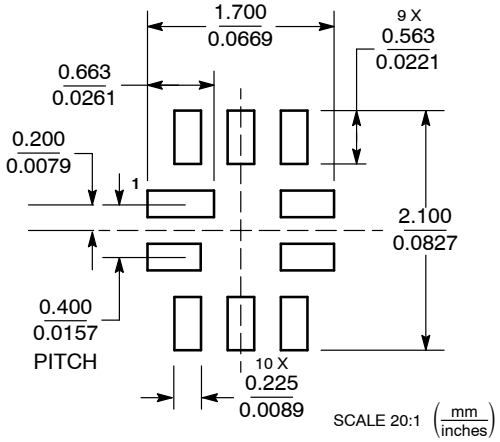


SCALE 20:1 $\left(\frac{\text{mm}}{\text{inches}}\right)$

| | | |
|---|---|---|
| **DOCUMENT NUMBER:** | **98AON22493D** | Electronic versions are uncontrolled except when accessed directly from the Document Repository. Printed versions are uncontrolled except when stamped “CONTROLLED COPY” in red. |
| **DESCRIPTION:** | **10 PIN UQFN, 1.4 X 1.8, 0.4P** | **PAGE 1 OF 1** |


ON Semiconductor and ON are trademarks of Semiconductor Components Industries, LLC dba ON Semiconductor or its subsidiaries in the United States and/or other countries. ON Semiconductor reserves the right to make changes without further notice to any products herein. ON Semiconductor makes no warranty, representation or guarantee regarding the suitability of its products for any particular purpose, nor does ON Semiconductor assume any liability arising out of the application or use of any product or circuit, and specifically disclaims any and all liability, including without limitation special, consequential or incidental damages. ON Semiconductor does not convey any license under its patent rights nor the rights of others.

© Semiconductor Components Industries, LLC, 2019

**onsemi**, , and other names, marks, and brands are registered and/or common law trademarks of Semiconductor Components Industries, LLC dba "**onsemi**" or its affiliates and/or subsidiaries in the United States and/or other countries. **onsemi** owns the rights to a number of patents, trademarks, copyrights, trade secrets, and other intellectual property. A listing of **onsemi**'s product/patent coverage may be accessed at www.onsemi.com/site/pdf/Patent−Marking.pdf. **onsemi** reserves the right to make changes at any time to any products or information herein, without notice. The information herein is provided "as−is" and **onsemi** makes no warranty, representation or guarantee regarding the accuracy of the information, product features, availability, functionality, or suitability of its products for any particular purpose, nor does **onsemi** assume any liability arising out of the application or use of any product or circuit, and specifically disclaims any and all liability, including without limitation special, consequential or incidental damages. Buyer is responsible for its products and applications using **onsemi** products, including compliance with all laws, regulations and safety requirements or standards, regardless of any support or applications information provided by **onsemi**. "Typical" parameters which may be provided in **onsemi** data sheets and/or specifications can and do vary in different applications and actual performance may vary over time. All operating parameters, including "Typicals" must be validated for each customer application by customer's technical experts. **onsemi** does not convey any license under any of its intellectual property rights nor the rights of others. **onsemi** products are not designed, intended, or authorized for use as a critical component in life support systems or any FDA Class 3 medical devices or medical devices with a same or similar classification in a foreign jurisdiction or any devices intended for implantation in the human body. Should Buyer purchase or use **onsemi** products for any such unintended or unauthorized application, Buyer shall indemnify and hold **onsemi** and its officers, employees, subsidiaries, affiliates, and distributors harmless against all claims, costs, damages, and expenses, and reasonable attorney fees arising out of, directly or indirectly, any claim of personal injury or death associated with such unintended or unauthorized use, even if such claim alleges that **onsemi** was negligent regarding the design or manufacture of the part. **onsemi** is an Equal Opportunity/Affirmative Action Employer. This literature is subject to all applicable copyright laws and is not for resale in any manner.

## ADDITIONAL INFORMATION

**TECHNICAL PUBLICATIONS**:
**Technical Library:** www.onsemi.com/design/resources/technical−documentation
**onsemi Website:** www.onsemi.com

**ONLINE SUPPORT**: www.onsemi.com/support
**For additional information, please contact your local Sales Representative at** www.onsemi.com/support/sales