NLSV1T244

1-Bit Dual-Supply Non-Inverting Level Translator

The NLSV1T244 is a 1−bit configurable dual−supply voltage level translator. The input A_n and output B_n ports are designed to track two different power supply rails, V_{CCA} and V_{CCB} respectively. Both supply rails are configurable from 0.9 V to 4.5 V allowing universal low−voltage translation from the input A_n to the output B_n port.

Features

- Wide V_{CCA} and V_{CCB} Operating Range: 0.9 V to 4.5 V
- High−Speed w/ Balanced Propagation Delay
- Inputs and Outputs have OVT Protection to 4.5 V
- Non−preferential V_{CCA} and V_{CCB} Sequencing
- Outputs at 3−State until Active V_{CC} is Reached
- Power−Off Protection
- Outputs Switch to 3−State with V_{CCB} at GND
- Ultra−Small Packaging: 1.2 mm x 1.0 mm UDFN6
- NLVSV Prefix for Automotive and Other Applications Requiring Unique Site and Control Change Requirements; AEC−Q100 Qualified and PPAP Capable
- These Devices are Pb−Free, Halogen Free/BFR Free and are RoHS Compliant

Typical Applications

- Mobile Phones, PDAs, Other Portable Devices

Important Information

- ESD Protection for All Pins:
  HBM (Human Body Model) > 3000 V

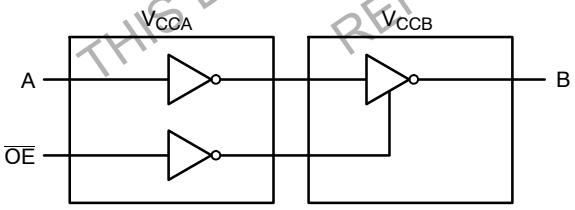

Figure 1. Logic Diagram

ON Semiconductor®

www.onsemi.com

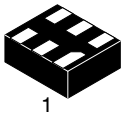

UDFN6
MU SUFFIX
CASE 517AA

MARKING DIAGRAM

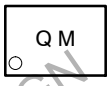

Q = Specific Device Code
M = Date Code

PIN ASSIGNMENT

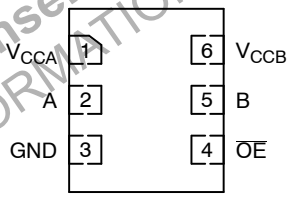

(Top View)

ORDERING INFORMATION

Device	Package	Shipping†
NLSV1T244MUTBG, NLVSV1T244MUTBG	UDFN6 (Pb−Free)	3000 / Tape & Reel

†For information on tape and reel specifications, including part orientation and tape sizes, please refer to our Tape and Reel Packaging Specification Brochure, BRD8011/D.

DISCONTINUED
THIS DEVICE IS NOT RECOMMENDED FOR NEW DESIGN
PLEASE CONTACT YOUR onsemi REPRESENTATIVE FOR INFORMATION

PIN ASSIGNMENT

PIN	FUNCTION
V_{CCA}	Input Port DC Power Supply
V_{CCB}	Output Port DC Power Supply
GND	Ground
A	Input Port
B	Output Port
$\overline{OE}$	Output Enable

TRUTH TABLE

Inputs		Outputs
$\overline{OE}$	A	B
L	L	L
L	H	H
H	X	3−State

MAXIMUM RATINGS

Symbol	Rating		Value	Condition	Unit
V_{CCA}, V_{CCB}	DC Supply Voltage		−0.5 to +5.5		V
V_I	DC Input Voltage	A	−0.5 to +5.5		V
V_C	Control Input	$\overline{OE}$	−0.5 to +5.5		V
V_O	DC Output Voltage (Power Down)	B	−0.5 to +5.5	V_{CCA} = V_{CCB} = 0	V
	(Active Mode)	B	−0.5 to +5.5		V
	(Tri−State Mode)	B	−0.5 to +5.5		V
I_{IK}	DC Input Diode Current		−20	V_I < GND	mA
I_{OK}	DC Output Diode Current		−50	V_O < GND	mA
I_O	DC Output Source/Sink Current		±50		mA
I_{CCA}, I_{CCB}	DC Supply Current Per Supply Pin		±100		mA
I_{GND}	DC Ground Current per Ground Pin		±100		mA
T_{STG}	Storage Temperature		−65 to +150		°C

Stresses exceeding those listed in the Maximum Ratings table may damage the device. If any of these limits are exceeded, device functionality should not be assumed, damage may occur and reliability may be affected.

RECOMMENDED OPERATING CONDITIONS

Symbol	Parameter		Min	Max	Unit
V_{CCA}, V_{CCB}	Positive DC Supply Voltage		0.9	4.5	V
V_I	Bus Input Voltage		GND	4.5	V
V_C	Control Input	$\overline{OE}$	GND	4.5	V
V_{IO}	Bus Output Voltage (Power Down Mode)	B	GND	4.5	V
	(Active Mode)	B	GND	V_{CCB}	V
	(Tri−State Mode)	B	GND	4.5	V
T_A	Operating Temperature Range		−40	+85	°C
$\Delta t / \Delta V$	Input Transition Rise or Rate V_I, from 30% to 70% of V_{CC}; V_{CC} = 3.3 V ±0.3 V		0	10	nS

Functional operation above the stresses listed in the Recommended Operating Ranges is not implied. Extended exposure to stresses beyond the Recommended Operating Ranges limits may affect device reliability.

DISCONTINUED
THIS DEVICE IS NOT RECOMMENDED FOR NEW DESIGN
PLEASE CONTACT YOUR onsemi REPRESENTATIVE FOR INFORMATION

DC ELECTRICAL CHARACTERISTICS

Symbol	Parameter	Test Conditions	V_{CCA} (V)	V_{CCB} (V)	−40°C to +85°C		Unit
					Min	Max	
V_{IH}	Input HIGH Voltage (A, $\overline{OE}$)		3.6 – 4.5	0.9 – 4.5	2.2	–	V
			2.7 – 3.6		2.0	–	
			2.3 – 2.7		1.6	–	
			1.4 – 2.3		0.65 * V_{CCA}	–	
			0.9 – 1.4		0.9 * V_{CCA}	–	
V_{IL}	Input LOW Voltage (A, $\overline{OE}$)		3.6 – 4.5	0.9 – 4.5	–	0.8	V
			2.7 – 3.6		–	0.8	
			2.3 – 2.7		–	0.7	
			1.4 – 2.3		–	0.35 * V_{CCA}	
			0.9 – 1.4		–	0.1 * V_{CCA}	
V_{OH}	Output HIGH Voltage	I_{OH} = −100 μA; V_I = V_{IH}	0.9 – 4.5	0.9 – 4.5	V_{CCB} – 0.2	–	V
		I_{OH} = −0.5 mA; V_I = V_{IH}	0.9	0.9	0.75 * V_{CCB}	–	
		I_{OH} = −2 mA; V_I = V_{IH}	1.4	1.4	1.05	–	
		I_{OH} = −6 mA; V_I = V_{IH}	1.65	1.65	1.25	–	
			2.3	2.3	2.0	–	
		I_{OH} = −12 mA; V_I = V_{IH}	2.3	2.3	1.8	–	
			2.7	2.7	2.2	–	
		I_{OH} = −18 mA; V_I = V_{IH}	2.3	2.3	1.7	–	
			3.0	3.0	2.4	–	
		I_{OH} = −24 mA; V_I = V_{IH}	3.0	3.0	2.2	–	
V_{OL}	Output LOW Voltage	I_{OL} = 100 μA; V_I = V_{IL}	0.9 – 4.5	0.9 – 4.5	–	0.2	V
		I_{OL} = 0.5 mA; V_I = V_{IL}	1.1	1.1	–	0.3	
		I_{OL} = 2 mA; V_I = V_{IL}	1.4	1.4	–	0.35	
		I_{OL} = 6 mA; V_I = V_{IL}	1.65	1.65	–	0.3	
		I_{OL} = 12 mA; V_I = V_{IL}	2.3	2.3	–	0.4	
			2.7	2.7	–	0.4	
		I_{OL} = 18 mA; V_I = V_{IL}	2.3	2.3	–	0.6	
			3.0	3.0	–	0.4	
		I_{OL} = 24 mA; V_I = V_{IL}	3.0	3.0	–	0.55	
I_I	Input Leakage Current	V_I = V_{CCA} or GND	0.9 – 4.5	0.9 – 4.5	−1.0	1.0	μA
I_{OFF}	Power−Off Leakage Current	$\overline{OE}$ = 0 V	0 0.9 – 4.5	0.9 – 4.5 0	−1.0 −1.0	1.0 1.0	μA
I_{CCA}	Quiescent Supply Current	V_I = V_{CCA} or GND; I_O = 0, V_{CCA} = V_{CCB}	0.9 – 4.5	0.9 – 4.5	–	1.0	μA
I_{CCB}	Quiescent Supply Current	V_I = V_{CCA} or GND; I_O = 0, V_{CCA} = V_{CCB}	0.9 – 4.5	0.9 – 4.5	–	1.0	μA
I_{CCA} + I_{CCB}	Quiescent Supply Current	V_I = V_{CCA} or GND; I_O = 0, V_{CCA} = V_{CCB}	0.9 – 4.5	0.9 – 4.5	–	2.0	μA
ΔI_{CCA}	Increase in I_{CC} per Input Voltage, Other Inputs at V_{CCA} or GND	V_I = V_{CCA} – 0.6 V; V_I = V_{CCA} or GND	4.5 3.6	4.5 3.6	–	10 5.0	μA
ΔI_{CCB}	Increase in I_{CC} per Input Voltage, Other Inputs at V_{CCA} or GND	V_I = V_{CCA} – 0.6 V; V_I = V_{CCA} or GND	4.5 3.6	4.5 3.6	–	10 5.0	μA
I_{OZ}	I/O Tri−State Output Leakage Current	T_A = 25°C, $\overline{OE}$ = 0 V	0.9 – 4.5	0.9 – 4.5	−1.0	1.0	μA

Product parametric performance is indicated in the Electrical Characteristics for the listed test conditions, unless otherwise noted. Product performance may not be indicated by the Electrical Characteristics if operated under different conditions.

DISCONTINUED
THIS DEVICE IS NOT RECOMMENDED FOR NEW DESIGN
PLEASE CONTACT YOUR onsemi
REPRESENTATIVE FOR INFORMATION

TOTAL STATIC POWER CONSUMPTION (I_{CCA} + I_{CCB})

	−40°C to +85°C										
	V_{CCB} (V)										
	4.5		3.3		2.8		1.8		0.9		
V_{CCA} (V)	Min	Max	Min	Max	Min	Max	Min	Max	Min	Max	Unit
4.5		2		2		2		2		< 1.5	μA
3.3		2		2		2		2		< 1.5	μA
2.8		< 2		< 1		< 1		< 0.5		< 0.5	μA
1.8		< 1		< 1		< 0.5		< 0.5		< 0.5	μA
0.9		< 0.5		< 0.5		< 0.5		< 0.5		< 0.5	μA

NOTE: Connect ground before applying supply voltage V_{CCA} or V_{CCB}. This device is designed with the feature that the power−up sequence of V_{CCA} and V_{CCB} will not damage the IC.

AC ELECTRICAL CHARACTERISTICS

			−40°C to +85°C										
			V_{CCB} (V)										
			4.5		3.3		2.8		1.8		1.2		
Symbol	Parameter	V_{CCA} (V)	Min	Max	Min	Max	Min	Max	Min	Max	Min	Max	Unit
t_{PLH}, t_{PHL} (Note 1)	Propagation Delay, A to B	4.5		1.6		1.8		2.0		2.1		2.3	nS
		3.3		1.7		1.9		2.1		2.3		2.6	
		2.8		1.9		2.1		2.3		2.5		2.8	
		1.8		2.1		2.4		2.5		2.7		3.0	
		1.2		2.4		2.7		2.8		3.0		3.3	
t_{PZH}, t_{PZL} (Note 1)	Output Enable, $\overline{O}$ to B	4.5		2.6		3.8		4.0		4.1		4.3	nS
		3.3		3.7		3.9		4.1		4.3		4.6	
		2.5		3.9		4.1		4.3		4.5		4.8	
		1.8		4.1		4.4		4.5		4.7		5.0	
		1.2		4.4		4.7		4.8		5.0		5.3	
t_{PHZ}, t_{PLZ} (Note 1)	Output Disable, $\overline{OE}$ to B	4.5		2.6		3.8		4.0		4.1		4.3	nS
		3.3		3.7		3.9		4.1		4.3		4.6	
		2.5		3.9		4.1		4.3		4.5		4.8	
		1.8		4.1		4.4		4.5		4.7		5.0	
		1.2		4.4		4.7		4.8		5.0		5.3	
t_{OSHL}, t_{OSLH} (Note 1)	Output to Output Skew, Tim	4.5		0.15		0.15		0.15		0.15		0.15	nS
		3.3		0.15		0.15		0.15		0.15		0.15	
		2.5		0.15		0.15		0.15		0.15		0.15	
		1.8		0.15		0.15		0.15		0.15		0.15	
		1.2		0.15		0.15		0.15		0.15		0.15	

1. Propagation delays defined per Figure 2.

DISCONTINUED
THIS DEVICE IS NOT RECOMMENDED FOR NEW DESIGN
PLEASE CONTACT YOUR onsemi REPRESENTATIVE FOR INFORMATION

CAPACITANCE

Symbol	Parameter	Test Conditions	Typ (Note 2)	Unit
C_{IN}	Control Pin Input Capacitance	V_{CCA} = V_{CCB} = 3.3 V, V_I = 0 V or $V_{CCA/B}$	3.5	pF
$C_{I/O}$	I/O Pin Input Capacitance	V_{CCA} = V_{CCB} = 3.3 V, V_I = 0 V or $V_{CCA/B}$	5.0	pF
C_{PD}	Power Dissipation Capacitance	V_{CCA} = V_{CCB} = 3.3 V, V_I = 0 V or V_{CCA}, f = 10 MHz	5.0	pF

2. Typical values are at T_A = +25°C.
3. C_{PD} is defined as the value of the IC's equivalent capacitance from which the operating current can be calculated from: $I_{CC(operating)} \cong C_{PD} \times V_{CC} \times f_{IN}$ where $I_{CC} = I_{CCA} + I_{CCB}$.

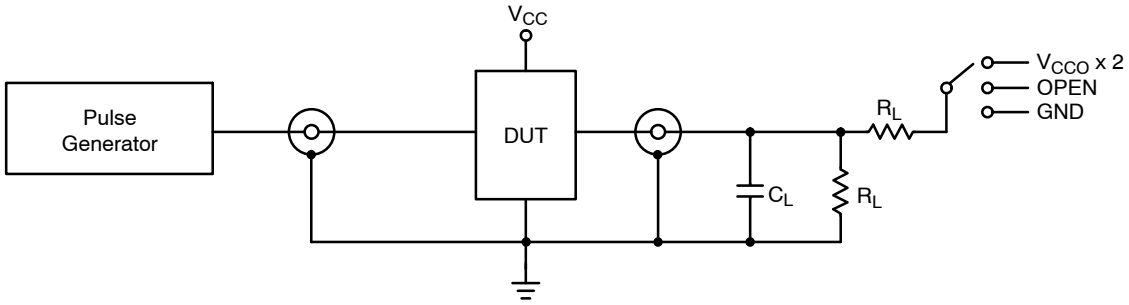

Figure 2. AC (Propagation Delay) Test Circuit

Test	Switch
t_{PLH}, t_{PHL}	OPEN
t_{PLZ}, t_{PZL}	V_{CCO} x 2
t_{PHZ}, t_{PZH}	GND
C_L = 15 pF or equivalent (includes probe and jig capacitance) R_L = 2 kΩ or equivalent Z_{OUT} of pulse generator = 50 Ω	

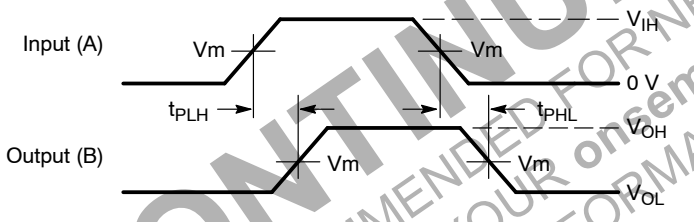

Waveform 1 – Propagation Delays
$t_R = t_F$ = 2.0 ns, 10% to 90%; f = 1 MHz; t_W = 500 ns

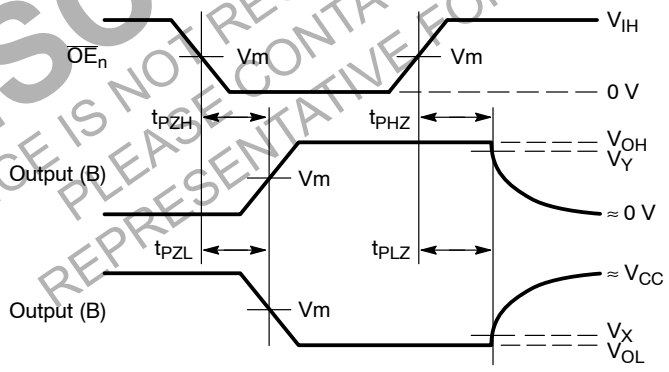

Waveform 2 – Output Enable and Disable Times
$t_R = t_F$ = 2.0 ns, 10% to 90%; f = 1 MHz; t_W = 500 ns

Figure 3. AC (Propagation Delay) Test Circuit Waveforms

Symbol	V_{CC}				
	3.0 V – 4.5 V	2.3 V – 2.7 V	1.65 V – 1.95 V	1.4 V – 1.6 V	0.9 V – 1.3 V
V_{mA}	$V_{CCA}/2$	$V_{CCA}/2$	$V_{CCA}/2$	$V_{CCA}/2$	$V_{CCA}/2$
V_{mB}	$V_{CCB}/2$	$V_{CCB}/2$	$V_{CCB}/2$	$V_{CCB}/2$	$V_{CCB}/2$
V_X	V_{OL} x 0.1	V_{OL} x 0.1	V_{OL} x 0.1	V_{OL} x 0.1	V_{OL} x 0.1
V_Y	V_{OH} x 0.9	V_{OH} x 0.9	V_{OH} x 0.9	V_{OH} x 0.9	V_{OH} x 0.9

DISCONTINUED
THIS DEVICE IS NOT RECOMMENDED FOR NEW DESIGN
PLEASE CONTACT YOUR onsemi
REPRESENTATIVE FOR INFORMATION

MECHANICAL CASE OUTLINE
PACKAGE DIMENSIONS

UDFN6, 1.2x1.0, 0.4P
CASE 517AA
ISSUE D

DATE 03 SEP 2010

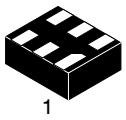

SCALE 8:1

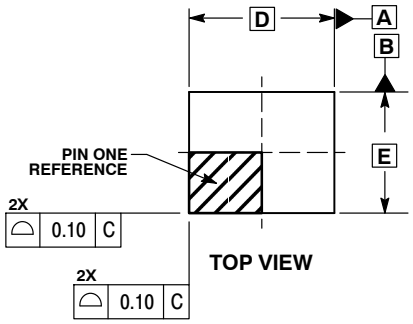

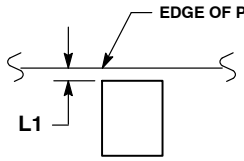

DETAIL A
Bottom View
(Optional)

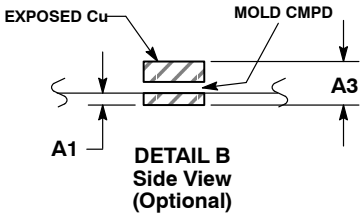

DETAIL B
Side View
(Optional)

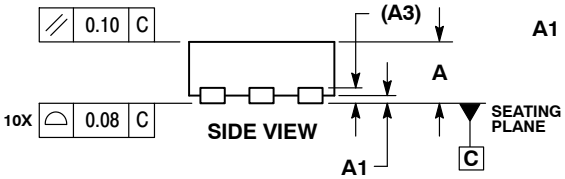

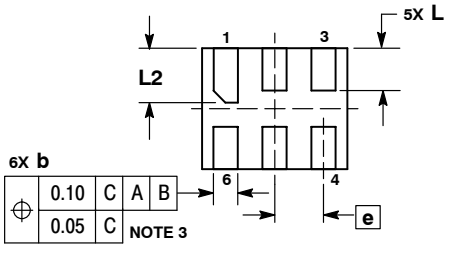

BOTTOM VIEW

NOTES:
1. DIMENSIONING AND TOLERANCING PER ASME Y14.5M, 1994.
2. CONTROLLING DIMENSION: MILLIMETERS.
3. DIMENSION b APPLIES TO PLATED TERMINAL AND IS MEASURED BETWEEN 0.25 AND 0.30 mm FROM TERMINAL.
4. COPLANARITY APPLIES TO THE EXPOSED PAD AS WELL AS THE TERMINALS.

	MILLIMETERS	
DIM	MIN	MAX
A	0.45	0.55
A1	0.00	0.05
A3	0.127 REF	
b	0.15	0.25
D	1.20 BSC	
E	1.00 BSC	
e	0.40 BSC	
L	0.30	0.40
L1	0.00	0.15
L2	0.40	0.50

GENERIC MARKING DIAGRAM*



X = Specific Device Code
M = Date Code

*This information is generic. Please refer to device data sheet for actual part marking. Pb−Free indicator, “G” or microdot “ ▪”, may or may not be present.

MOUNTING FOOTPRINT*

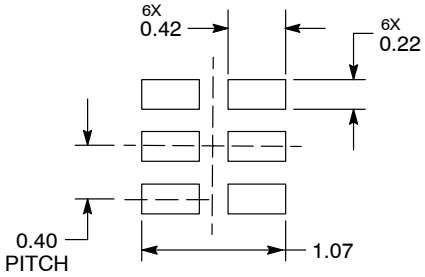

DIMENSIONS: MILLIMETERS

*For additional information on our Pb−Free strategy and soldering details, please download the ON Semiconductor Soldering and Mounting Techniques Reference Manual, SOLDERRM/D.

DOCUMENT NUMBER:	98AON22068D	Electronic versions are uncontrolled except when accessed directly from the Document Repository. Printed versions are uncontrolled except when stamped “CONTROLLED COPY” in red.
DESCRIPTION:	6 PIN UDFN, 1.2X1.0, 0.4P	PAGE 1 OF 1

onsemi and onsemi are trademarks of Semiconductor Components Industries, LLC dba **onsemi** or its subsidiaries in the United States and/or other countries. **onsemi** reserves the right to make changes without further notice to any products herein. **onsemi** makes no warranty, representation or guarantee regarding the suitability of its products for any particular purpose, nor does **onsemi** assume any liability arising out of the application or use of any product or circuit, and specifically disclaims any and all liability, including without limitation special, consequential or incidental damages. **onsemi** does not convey any license under its patent rights nor the rights of others.

© Semiconductor Components Industries, LLC, 2019

onsemi, , and other names, marks, and brands are registered and/or common law trademarks of Semiconductor Components Industries, LLC dba "**onsemi**" or its affiliates and/or subsidiaries in the United States and/or other countries. **onsemi** owns the rights to a number of patents, trademarks, copyrights, trade secrets, and other intellectual property. A listing of **onsemi**'s product/patent coverage may be accessed at www.onsemi.com/site/pdf/Patent−Marking.pdf. **onsemi** reserves the right to make changes at any time to any products or information herein, without notice. The information herein is provided "as−is" and **onsemi** makes no warranty, representation or guarantee regarding the accuracy of the information, product features, availability, functionality, or suitability of its products for any particular purpose, nor does **onsemi** assume any liability arising out of the application or use of any product or circuit, and specifically disclaims any and all liability, including without limitation special, consequential or incidental damages. Buyer is responsible for its products and applications using **onsemi** products, including compliance with all laws, regulations and safety requirements or standards, regardless of any support or applications information provided by **onsemi**. "Typical" parameters which may be provided in **onsemi** data sheets and/or specifications can and do vary in different applications and actual performance may vary over time. All operating parameters, including "Typicals" must be validated for each customer application by customer's technical experts. **onsemi** does not convey any license under any of its intellectual property rights nor the rights of others. **onsemi** products are not designed, intended, or authorized for use as a critical component in life support systems or any FDA Class 3 medical devices or medical devices with a same or similar classification in a foreign jurisdiction or any devices intended for implantation in the human body. Should Buyer purchase or use **onsemi** products for any such unintended or unauthorized application, Buyer shall indemnify and hold **onsemi** and its officers, employees, subsidiaries, affiliates, and distributors harmless against all claims, costs, damages, and expenses, and reasonable attorney fees arising out of, directly or indirectly, any claim of personal injury or death associated with such unintended or unauthorized use, even if such claim alleges that **onsemi** was negligent regarding the design or manufacture of the part. **onsemi** is an Equal Opportunity/Affirmative Action Employer. This literature is subject to all applicable copyright laws and is not for resale in any manner.

ADDITIONAL INFORMATION

TECHNICAL PUBLICATIONS:
Technical Library: www.onsemi.com/design/resources/technical−documentation
onsemi Website: www.onsemi.com

ONLINE SUPPORT: www.onsemi.com/support
For additional information, please contact your local Sales Representative at www.onsemi.com/support/sales