NLX3G14

Triple Schmitt-Trigger Inverter

The NLX3G14 MiniGate™ is an advanced high−speed CMOS triple Schmitt−trigger inverter in ultra−small footprint.

The NLX3G14 input and output structures provide protection when voltages up to 7.0 V are applied, regardless of the supply voltage.

The NLX3G14 can be used to enhance noise immunity or to square up slowly changing waveforms.

Features

- Designed for 1.65 V to 5.5 V V_{CC} Operation
- Low Power Dissipation: I_{CC} = 1 μA (Max) at T_A = 25°C
- 24 Balanced Output Source and Sink Capability
- Balanced Propagation Delays
- Overvoltage Tolerant (OVT) Input and Output Pins
- Ultra−Small Packages
- These are Pb−Free Devices

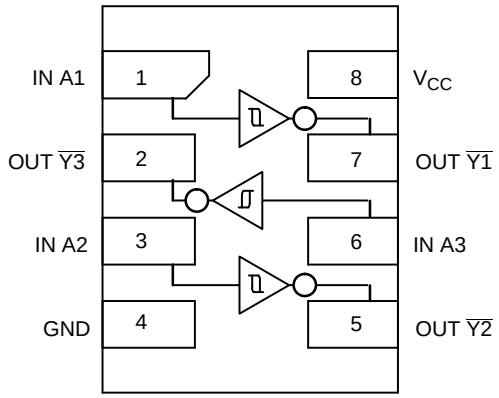

Figure 1. Pinout (Top View)

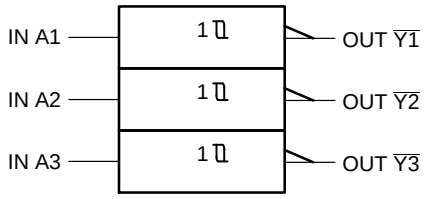

Figure 2. Logic Symbol

FUNCTION TABLE

A	$\overline{Y}$
L	H
H	L

PIN ASSIGNMENT

1	IN A1
2	OUT $\overline{Y3}$
3	IN A2
4	GND
5	OUT $\overline{Y2}$
6	IN A3
7	OUT $\overline{Y1}$
8	V_{CC}

ON Semiconductor®

www.onsemi.com

MARKING DIAGRAMS



UDFN8
1.45 x 1.0
CASE 517BZ

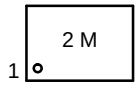



UDFN8
1.6 x 1.0
CASE 517BY

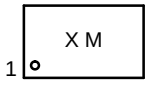



UDFN8
1.95 x 1.0
CASE 517CA

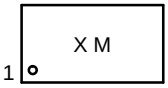

F, AC, 2 = Specific Device Code
M = Date Code
▪ = Pb−Free Package

ORDERING INFORMATION

See detailed ordering and shipping information in the package dimensions section on page 5 of this data sheet.

© Semiconductor Components Industries, LLC, 2016

MAXIMUM RATINGS

Symbol	Parameter		Value	Unit
V_{CC}	DC Supply Voltage		−0.5 to +7.0	V
V_{IN}	DC Input Voltage		−0.5 to +7.0	V
V_{OUT}	DC Output Voltage		−0.5 to +7.0	V
I_{IK}	DC Input Diode Current	V_{IN} < GND	−50	mA
I_{OK}	DC Output Diode Current	V_{OUT} < GND	±50	mA
I_O	DC Output Source/Sink Current		±50	mA
I_{CC}	DC Supply Current Per Supply Pin		±100	mA
I_{GND}	DC Ground Current per Ground Pin		±100	mA
T_{STG}	Storage Temperature Range		−65 to +150	°C
T_L	Lead Temperature, 1 mm from Case for 10 Seconds		260	°C
T_J	Junction Temperature Under Bias		150	°C
MSL	Moisture Sensitivity		Level 1	
F_R	Flammability Rating Oxygen	Index: 28 to 34	UL 94 V−0 @ 0.125 in	
V_{ESD}	ESD Withstand Voltage	Human Body Model (Note 2) Machine Model (Note 3) Charged Device Model (Note 4)	> 2000 > 200 N/A	V
$I_{LATCHUP}$	Latchup Performance Above V_{CC} and Below GND at 125°C (Note 5)		±500	mA

Stresses exceeding those listed in the Maximum Ratings table may damage the device. If any of these limits are exceeded, device functionality should not be assumed, damage may occur and reliability may be affected.

1. Measured with minimum pad spacing on an FR4 board, using 10 mm−by−1 inch, 2 ounce copper trace no air flow.
2. Tested to EIA / JESD22−A114−A.
3. Tested to EIA / JESD22−A115−A.
4. Tested to JESD22−C101−A.
5. Tested to EIA / JESD78.

RECOMMENDED OPERATING CONDITIONS

Symbol	Parameter		Min	Max	Unit
V_{CC}	Positive DC Supply Voltage		1.65	5.5	V
V_{IN}	Digital Input Voltage		0	5.5	V
V_{OUT}	Output Voltage		0	5.5	V
T_A	Operating Free−Air Temperature		−55	+125	°C
$\Delta t/\Delta V$	Input Transition Rise or Fall Rate	V_{CC} = 2.5 V ± 0.2 V V_{CC} = 3.3 V ± 0.3 V V_{CC} = 5.0 V ± 0.5 V	0 0 0	No Limit No Limit No Limit	ns/V

Functional operation above the stresses listed in the Recommended Operating Ranges is not implied. Extended exposure to stresses beyond the Recommended Operating Ranges limits may affect device reliability.

DC ELECTRICAL CHARACTERISTICS

Symbol	Parameter	Conditions	V_{CC} (V)	T_A = 25 °C			T_A = +85°C		T_A = −55°C to +125°C		Unit
				Min	Typ	Max	Min	Max	Min	Max	
V_{T+}	Positive Threshold Voltage		1.65 2.3 2.7 3.0 3.0 4.5	0.6 1.0 1.2 1.3 1.9 2.2	1.0 1.5 1.7 1.9 2.7 3.3	1.4 1.8 2.0 2.2 3.1 3.6	0.6 1.0 1.2 1.3 1.9 2.2	1.4 1.8 2.0 2.2 3.1 3.6	0.6 1.0 1.2 1.3 1.9 2.2	1.4 1.8 2.0 2.2 3.1 3.6	V
V_{T-}	Negative Threshold Voltage		1.65 2.3 2.7 3.0 3.0 4.5	0.2 0.4 0.5 0.6 1.0 1.2	0.5 0.75 0.87 1.0 1.5 1.9	0.8 1.15 1.4 1.5 2.0 2.3	0.2 0.4 0.5 0.6 1.0 1.2	0.8 1.15 1.4 1.5 2.0 2.3	0.2 0.4 0.5 0.6 1.0 1.2	0.8 1.15 1.4 1.5 2.0 2.3	V
V_H	Hysteresis Voltage		1.65 2.3 2.7 3.0 3.0 4.5	0.1 0.25 0.3 0.4 0.6 0.7	0.48 0.75 0.83 0.93 1.2 1.4	0.9 1.1 1.15 1.2 1.5 1.7	0.1 0.25 0.3 0.4 0.6 0.7	0.9 1.1 1.15 1.2 1.5 1.7	0.1 0.25 0.3 0.4 0.6 0.7	0.9 1.1 1.15 1.2 1.5 1.7	V
V_{OH}	Minimum High−Level Output Voltage	$V_{IN} \le V_{T-MIN}$ I_{OH} = −100 μA	1.65 to 5.5	V_{CC} − 0.1	V_{CC}		V_{CC} − 0.1		V_{CC} − 0.1		V
		$V_{IN} \le V_{T-MIN}$ I_{OH} = −4 mA I_{OH} = −8 mA I_{OH} = −12 mA I_{OH} = −16 mA I_{OH} = −24 mA I_{OH} = −32 mA	 1.65 2.3 2.7 3.0 3.0 4.5	 1.29 1.9 2.2 2.4 2.3 3.8	 1.52 2.1 2.4 2.7 2.5 4.0		 1.29 1.9 2.2 2.4 2.3 3.8		 1.29 1.8 2.1 2.3 2.2 3.7		
V_{OL}	Maximum Low−Level Output Voltage	$V_{IN} \ge V_{T+MAX}$ I_{OL} = 100 μA	1.65 to 5.5		0	0.1		0.1		0.1	V
		$V_{IN} \ge V_{T+MAX}$ I_{OH} = 4 mA I_{OH} = 8 mA I_{OH} = 12 mA I_{OH} = 16 mA I_{OH} = 24 mA I_{OH} = 32 mA	 1.65 2.3 2.7 3.0 3.0 4.5	 	 0.08 0.2 0.22 0.28 0.38 0.42	 0.24 0.3 0.4 0.4 0.55 0.55	 	 0.24 0.3 0.4 0.4 0.55 0.55	 	 0.24 0.4 0.5 0.5 0.55 0.65	
I_{IN}	Input Leakage Current	0 ≤ V_{IN} ≤ 5.5 V	0 to 5.5			±0.1		±1.0		±1.0	μA
I_{OFF}	Power−Off Output Leakage Current	V_{OUT} = 5.5 V	0			1.0		10		10	μA
I_{CC}	Quiescent Supply Current	0 ≤ V_{IN} ≤ V_{CC}	5.5			1.0		10		10	μA

Product parametric performance is indicated in the Electrical Characteristics for the listed test conditions, unless otherwise noted. Product performance may not be indicated by the Electrical Characteristics if operated under different conditions.

AC ELECTRICAL CHARACTERISTICS (Input $t_r = t_f = 3.0$ ns)

Symbol	Parameter	V_{CC} (V)	Test Condition	T_A = 25 °C			T_A = +85°C		T_A = −55°C to +125°C		Unit
				Min	Typ	Max	Min	Max	Min	Max	
t_{PLH}, t_{PHL}	Propagation Delay, Input A to Output $\overline{Y}$	2.3−2.7	R_L = 1 MΩ, C_L = 15 pF	1.8	4.3	7.4	1.8	8.1	1.8	9.1	ns
		3.0−3.6	R_L = 1 MΩ, C_L = 15 pF	1.5	3.3	5.0	1.5	5.5	1.5	6.5	
			R_L = 500 Ω, C_L = 50 pF	1.8	4.0	6.0	1.8	6.6	1.8	7.6	
		4.5−5.5	R_L = 1 MΩ, C_L = 15 pF	1.0	2.7	4.1	1.0	4.5	1.0	5.5	
			R_L = 500 Ω, C_L = 50 pF	1.2	3.2	4.9	1.2	5.4	1.2	6.4	
C_{IN}	Input Capacitance	5.5	V_{IN} = 0 V or V_{CC}		2.5						pF
C_{PD}	Power Dissipation Capacitance (Note 6)	3.3 5.5	10 MHz V_{IN} = 0 V or V_{CC}		11 12.5						pF

6. C_{PD} is defined as the value of the internal equivalent capacitance which is calculated from the dynamic operating current consumption without load. Average operating current can be obtained by the equation $I_{CC(OPR)} = C_{PD} \bullet V_{CC} \bullet f_{in} + I_{CC}$. C_{PD} is used to determine the no−load dynamic power consumption: $P_D = C_{PD} \bullet V_{CC}^2 \bullet f_{in} + I_{CC} \bullet V_{CC}$.

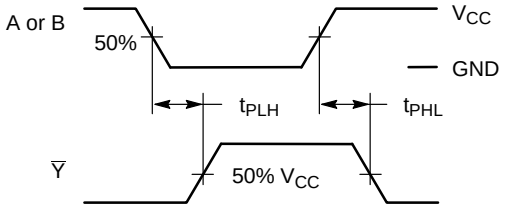

Figure 3. Switching Waveforms

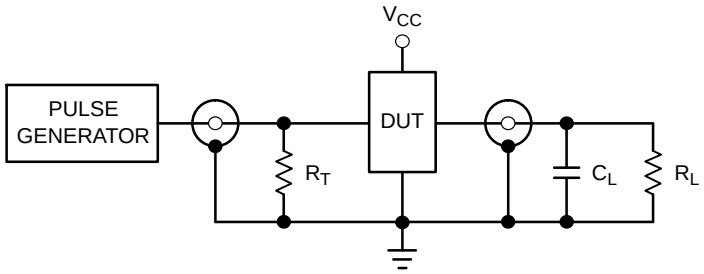

R_T = Z_{OUT} of pulse generator (typically 50 Ω)

Figure 4. Test Circuit

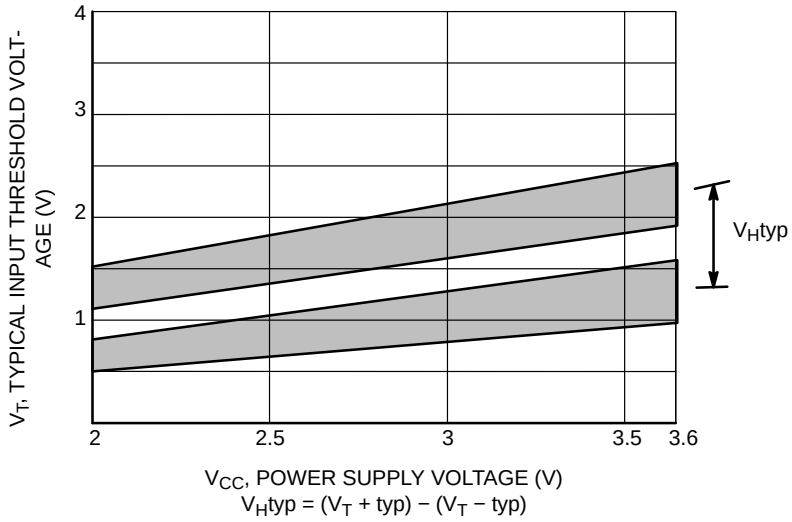

Figure 5. Typical Input Threshold, V_T+, V_T− versus Power Supply Voltage

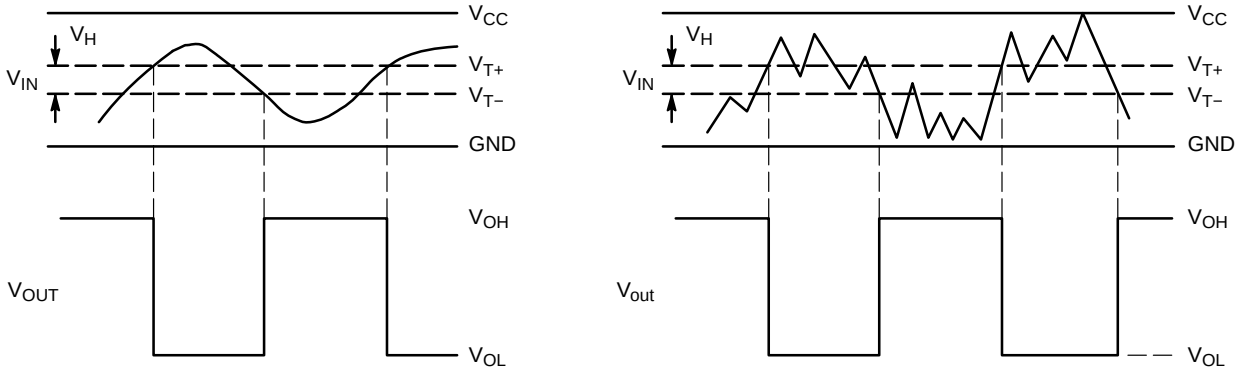

(a) A Schmitt−Trigger Squares Up Inputs With Slow Rise and Fall Times

(b) A Schmitt−Trigger Offers Maximum Noise Immunity

Figure 6. Typical Schmitt−Trigger Applications

ORDERING INFORMATION

Device	Package	Shipping†
NLX3G14DMUTCG (In Development)	UDFN8, 1.95 x 1.0, 0.5P (Pb−Free)	3000 / Tape & Reel
NLX3G14EMUTCG (In Development)	UDFN8, 1.6 x 1.0, 0.4P (Pb−Free)	3000 / Tape & Reel
NLX3G14FMUTCG	UDFN8, 1.45 x 1.0, 0.35P (Pb−Free)	3000 / Tape & Reel

†For information on tape and reel specifications, including part orientation and tape sizes, please refer to our Tape and Reel Packaging Specifications Brochure, BRD8011/D.

MiniGate is a trademark of Semiconductor Components Industries, LLC (SCILLC).

MECHANICAL CASE OUTLINE
PACKAGE DIMENSIONS

UDFN8, 1.45x1.00, 0.35P
CASE 517BZ
ISSUE O

SCALE 4:1

DATE 18 MAY 2011

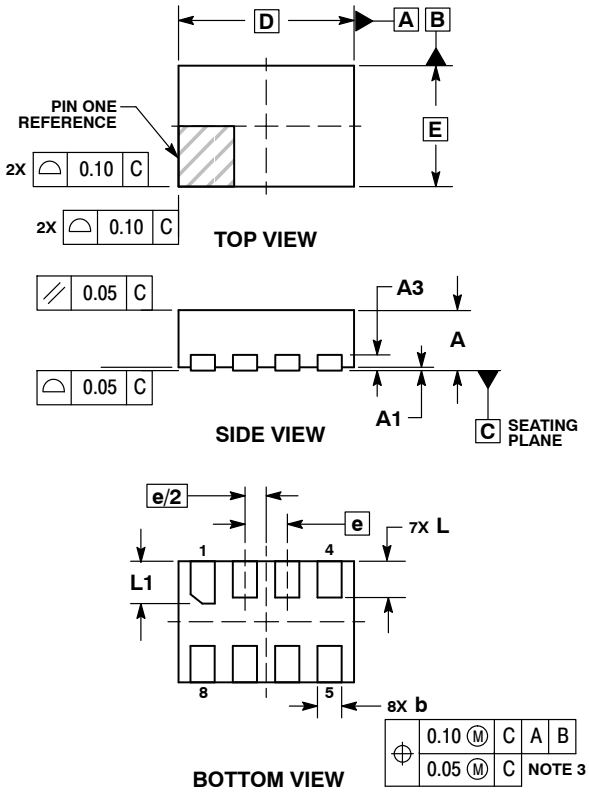

NOTES:
1. DIMENSIONING AND TOLERANCING PER ASME Y14.5M, 1994.
2. CONTROLLING DIMENSION: MILLIMETERS.
3. DIMENSION b APPLIES TO PLATED TERMINAL AND IS MEASURED BETWEEN 0.15 AND 0.20 MM FROM TERMINAL TIP.
4. PACKAGE DIMENSIONS EXCLUSIVE OF BURRS AND MOLD FLASH.

	MILLIMETERS	
DIM	MIN	MAX
A	0.45	0.55
A1	0.00	0.05
A3	0.13 REF	
b	0.15	0.25
D	1.45 BSC	
E	1.00 BSC	
e	0.35 BSC	
L	0.25	0.35
L1	0.30	0.40

RECOMMENDED SOLDERING FOOTPRINT*

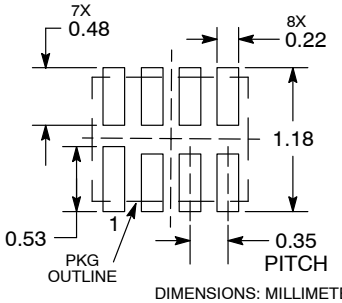

DIMENSIONS: MILLIMETERS

*For additional information on our Pb−Free strategy and soldering details, please download the **onsemi** Soldering and Mounting Techniques Reference Manual, SOLDERRM/D.

GENERIC MARKING DIAGRAM*

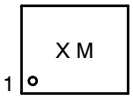

X = Specific Device Code
M = Date Code

*This information is generic. Please refer to device data sheet for actual part marking. Pb−Free indicator, “G” or microdot “▪”, may or may not be present. Some products may not follow the Generic Marking.

DOCUMENT NUMBER:	**98AON56796E**	Electronic versions are uncontrolled except when accessed directly from the Document Repository. Printed versions are uncontrolled except when stamped “CONTROLLED COPY” in red.
DESCRIPTION:	**UDFN8, 1.45X1, 0.35P**	**PAGE 1 OF 1**

onsemi and onsemi are trademarks of Semiconductor Components Industries, LLC dba **onsemi** or its subsidiaries in the United States and/or other countries. **onsemi** reserves the right to make changes without further notice to any products herein. **onsemi** makes no warranty, representation or guarantee regarding the suitability of its products for any particular purpose, nor does **onsemi** assume any liability arising out of the application or use of any product or circuit, and specifically disclaims any and all liability, including without limitation special, consequential or incidental damages. **onsemi** does not convey any license under its patent rights nor the rights of others.

© Semiconductor Components Industries, LLC, 2019

onsemi, , and other names, marks, and brands are registered and/or common law trademarks of Semiconductor Components Industries, LLC dba "**onsemi**" or its affiliates and/or subsidiaries in the United States and/or other countries. **onsemi** owns the rights to a number of patents, trademarks, copyrights, trade secrets, and other intellectual property. A listing of **onsemi**'s product/patent coverage may be accessed at www.onsemi.com/site/pdf/Patent−Marking.pdf. **onsemi** reserves the right to make changes at any time to any products or information herein, without notice. The information herein is provided "as−is" and **onsemi** makes no warranty, representation or guarantee regarding the accuracy of the information, product features, availability, functionality, or suitability of its products for any particular purpose, nor does **onsemi** assume any liability arising out of the application or use of any product or circuit, and specifically disclaims any and all liability, including without limitation special, consequential or incidental damages. Buyer is responsible for its products and applications using **onsemi** products, including compliance with all laws, regulations and safety requirements or standards, regardless of any support or applications information provided by **onsemi**. "Typical" parameters which may be provided in **onsemi** data sheets and/or specifications can and do vary in different applications and actual performance may vary over time. All operating parameters, including "Typicals" must be validated for each customer application by customer's technical experts. **onsemi** does not convey any license under any of its intellectual property rights nor the rights of others. **onsemi** products are not designed, intended, or authorized for use as a critical component in life support systems or any FDA Class 3 medical devices or medical devices with a same or similar classification in a foreign jurisdiction or any devices intended for implantation in the human body. Should Buyer purchase or use **onsemi** products for any such unintended or unauthorized application, Buyer shall indemnify and hold **onsemi** and its officers, employees, subsidiaries, affiliates, and distributors harmless against all claims, costs, damages, and expenses, and reasonable attorney fees arising out of, directly or indirectly, any claim of personal injury or death associated with such unintended or unauthorized use, even if such claim alleges that **onsemi** was negligent regarding the design or manufacture of the part. **onsemi** is an Equal Opportunity/Affirmative Action Employer. This literature is subject to all applicable copyright laws and is not for resale in any manner.

ADDITIONAL INFORMATION

TECHNICAL PUBLICATIONS:
Technical Library: www.onsemi.com/design/resources/technical−documentation
onsemi Website: www.onsemi.com

ONLINE SUPPORT: www.onsemi.com/support
For additional information, please contact your local Sales Representative at www.onsemi.com/support/sales