NTHS5404T1

MOSFET – Power, N-Channel, ChipFET

20 V, 7.2 A

ON Semiconductor®

http://onsemi.com

$V_{(BR)DSS}$	$R_{DS(on)}$ TYP	I_D MAX
20 V	25 mΩ @ 4.5 V	7.2 A

Features

- Low $R_{DS(on)}$ for Higher Efficiency
- Logic Level Gate Drive
- Miniature ChipFET Surface Mount Package Saves Board Space
- Pb−Free Package is Available

Applications

- Power Management in Portable and Battery−Powered Products; i.e., Cellular and Cordless Telephones and PCMCIA Cards

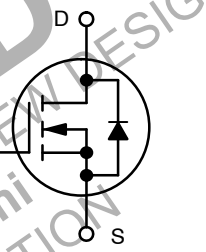

N−Channel MOSFET

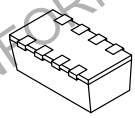

ChipFET
CASE 1206A
STYLE 1

MAXIMUM RATINGS (T_A = 25°C unless otherwise noted)

Rating	Symbol	5 Secs	Steady State	Unit
Drain−Source Voltage	V_{DS}	20		V
Gate−Source Voltage	V_{GS}	±12		V
Continuous Drain Current (T_J = 150°C) (Note 1) T_A = 25°C T_A = 85°C	I_D	 7.2 5.2	 5.2 3.8	A
Pulsed Drain Current	I_{DM}	±20		A
Continuous Source Current (Diode Conduction) (Note 1)	I_S	7.2	5.2	A
Maximum Power Dissipation (Note 1) T_A = 25°C T_A = 85°C	P_D	 2.5 1.3	 1.3 0.7	W
Operating Junction and Storage Temperature Range	T_J, T_{stg}	−55 to +150		°C

Stresses exceeding Maximum Ratings may damage the device. Maximum Ratings are stress ratings only. Functional operation above the Recommended Operating Conditions is not implied. Extended exposure to stresses above the Recommended Operating Conditions may affect device reliability.

1. Surface Mounted on FR4 board using 1 in sq pad size (Cu area = 1.127 in sq [1 oz] including traces).

PIN CONNECTIONS

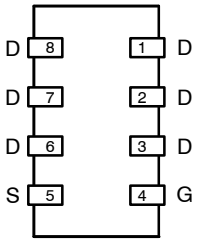

MARKING DIAGRAM

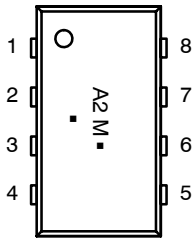

A2 = Specific Device Code
M = Month Code
▪ = Pb−Free Package
(Note: Microdot may be in either location)

ORDERING INFORMATION

Device	Package	Shipping†
NTHS5404T1	ChipFET	3000/Tape & Reel
NTHS5404T1G	ChipFET (Pb−Free)	3000/Tape & Reel

†For information on tape and reel specifications, including part orientation and tape sizes, please refer to our Tape and Reel Packaging Specifications Brochure, BRD8011/D.

DISCONTINUED
THIS DEVICE IS NOT RECOMMENDED FOR NEW DESIGN
PLEASE CONTACT YOUR onsemi
REPRESENTATIVE FOR INFORMATION

© Semiconductor Components Industries, LLC, 2008

THERMAL CHARACTERISTICS

Characteristic	Symbol	Typ	Max	Unit
Maximum Junction−to−Ambient (Note 2) $t \leq 5$ sec Steady State	$R_{\theta JA}$	 40 80	 50 95	°C/W
Maximum Junction−to−Foot (Drain) Steady State	$R_{\theta JF}$	15	20	°C/W

ELECTRICAL CHARACTERISTICS (T_J = 25°C unless otherwise noted)

Characteristic	Symbol	Test Condition	Min	Typ	Max	Unit
DYNAMIC (Note 4)						
Total Gate Charge	Q_G	V_{DS} = 10 V, V_{GS} = 4.5 V, I_D = 5.2 A		12	18	nC
Gate−Source Charge	Q_{GS}			2.4		
Gate−Drain Charge	Q_{GD}			3.2		
Input Capacitance	C_{ISS}	V_{DS} = 16 V, V_{GS} = 0 V, f = 1.0 MHz		740		pF
Output Capacitance	C_{OSS}			337		
Reverse Transfer Capacitance	C_{RSS}			88		
Turn−On Delay Time	$t_{d(on)}$	V_{DD} = 10 V, R_L = 10 Ω, $I_D \cong$ 1.0 A, V_{GEN} = 4.5 V, R_G = 6 Ω		8.0	15	ns
Rise Time	t_r			7.0	15	
Turn−Off Delay Time	$t_{d(off)}$			50	60	
Fall Time	t_f			28	40	
STATIC						
Drain−to−Source Breakdown Voltage (Note 3)	$V_{(BR)DSS}$	$V_{DS} = V_{GS}$, I_D = 250 μA	20	25.1		V
Drain−to−Source Breakdown Voltage Temperature Coefficient	$V_{(BR)DSS}/T_J$			18.4		mV/°C
Gate Threshold Voltage	$V_{GS(th)}$	$V_{DS} = V_{GS}$, I_D = 250 μA	0.6			V
Gate−Body Leakage	I_{GSS}	V_{DS} = 0 V, V_{GS} = ±12 V			±100	nA
Zero Gate Voltage Drain Current	I_{DSS}	V_{DS} = 16 V, V_{GS} = 0 V			1.0	μA
		V_{DS} = 16 V, V_{GS} = 0 V, T_J = 85°C			5.0	
On−State Drain Current (Note 3)	$I_{D(on)}$	$V_{DS} \geq$ 5.0 V, V_{GS} = 4.5 V	20			A
Drain−Source On−State Resistance (Note 3)	$r_{DS(on)}$	V_{GS} = 4.5 V, I_D = 5.2 A		0.025	0.030	Ω
		V_{GS} = 2.5 V, I_D = 4.3 A		0.038	0.045	
Forward Transconductance (Note 3)	g_{fs}	V_{DS} = 10 V, I_D = 5.2 A		20		S
DRAIN−SOURCE DIODE CHARACTERISTICS						
Forward Diode Voltage (Note 3)	V_{SD}	V_{GS} = 0 V, I_S = 5.2 A		0.8	1.2	V
Reverse Recovery Time	t_{rr}	V_{GS} = 0 V, I_S = 5.2 A, di_S/dt = 100 A/μs		20.9		ns
Charge Time	t_a			10.2		
Discharge Time	t_b			10.6		
Reverse Recovery Time	Q_{rr}			11		nC

2. Surface Mounted on FR4 board using 1 in sq pad size (Cu area = 1.127 in sq [1 oz] including traces).
3. Pulse Test: Pulse Width ≤ 300 μs, Duty Cycle ≤ 2%.
4. Guaranteed by design, not subject to production testing.

DISCONTINUED
THIS DEVICE IS NOT RECOMMENDED FOR NEW DESIGN
PLEASE CONTACT YOUR onsemi
REPRESENTATIVE FOR INFORMATION

TYPICAL ELECTRICAL CHARACTERISTICS

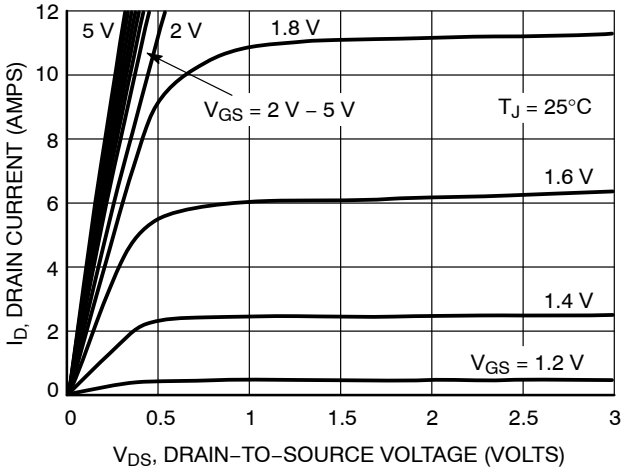

Figure 1. On–Region Characteristics

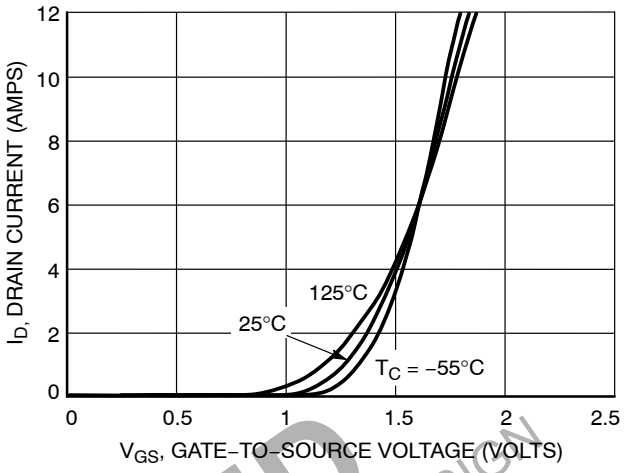

Figure 2. Transfer Characteristics

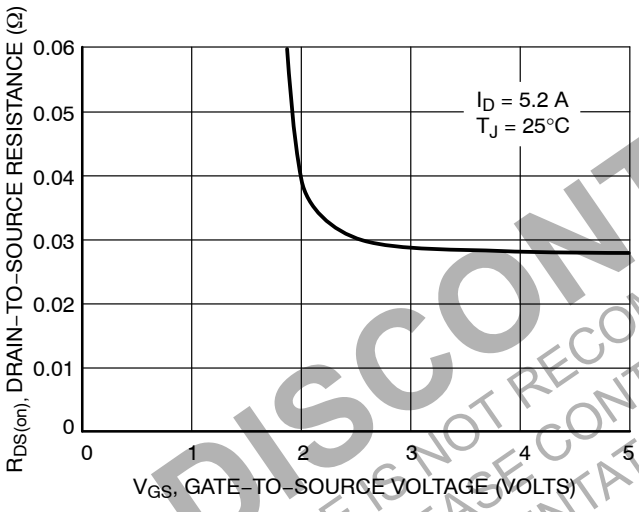

Figure 3. On–Resistance versus Gate–to–Source Voltage

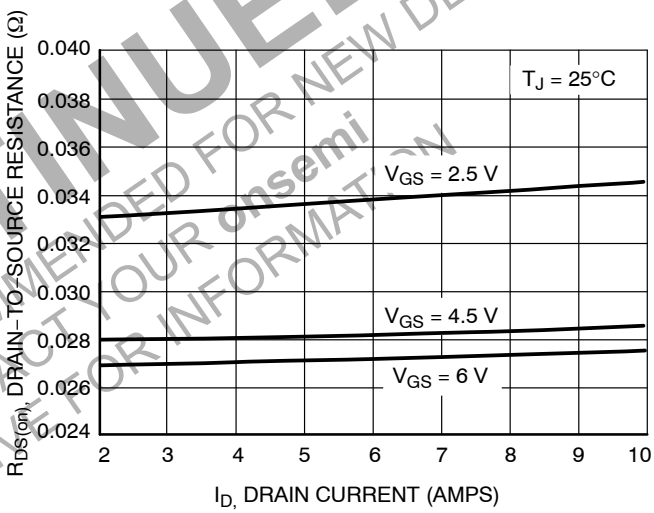

Figure 4. On–Resistance versus Drain Current and Gate Voltage

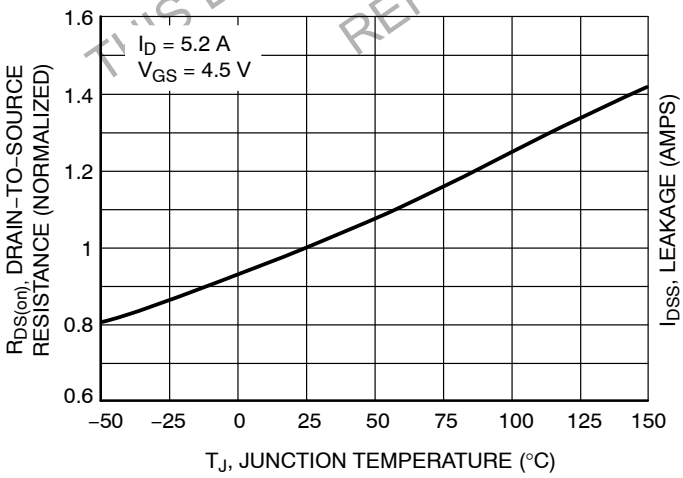

Figure 5. On–Resistance Variation with Temperature

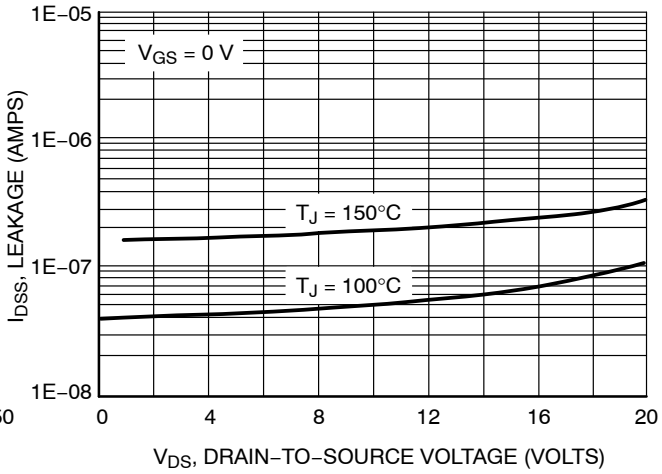

Figure 6. Drain–to–Source Leakage Current versus Voltage

DISCONTINUED
THIS DEVICE IS NOT RECOMMENDED FOR NEW DESIGN
PLEASE CONTACT YOUR onsemi
REPRESENTATIVE FOR INFORMATION

TYPICAL ELECTRICAL CHARACTERISTICS

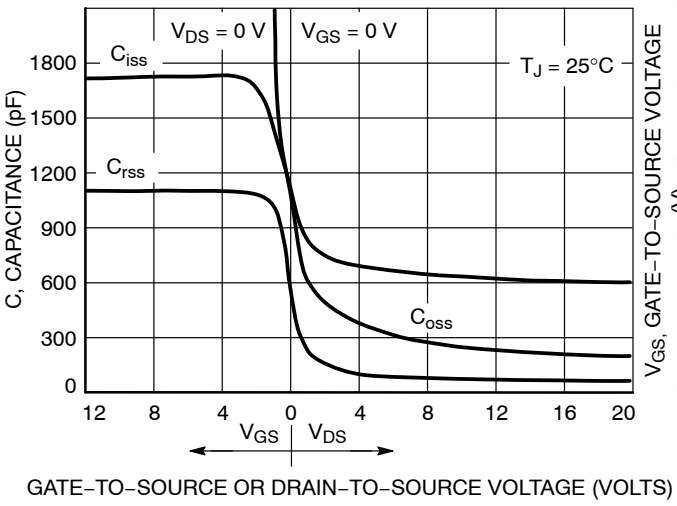

Figure 7. Capacitance Variation

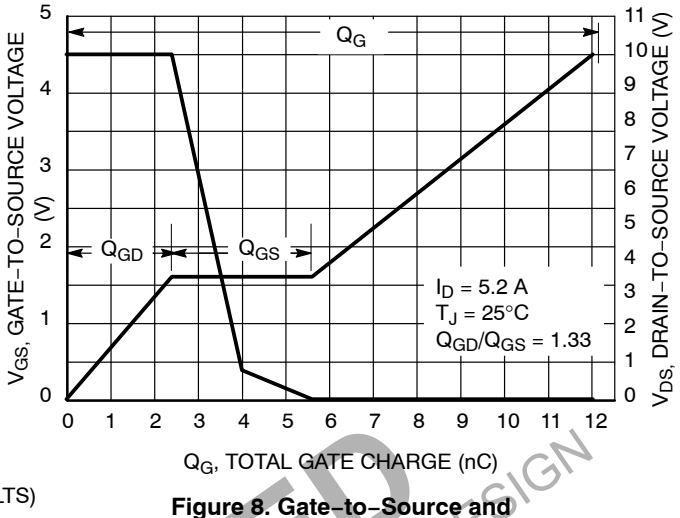

Figure 8. Gate−to−Source and Drain−to−Source Voltage versus Total Charge

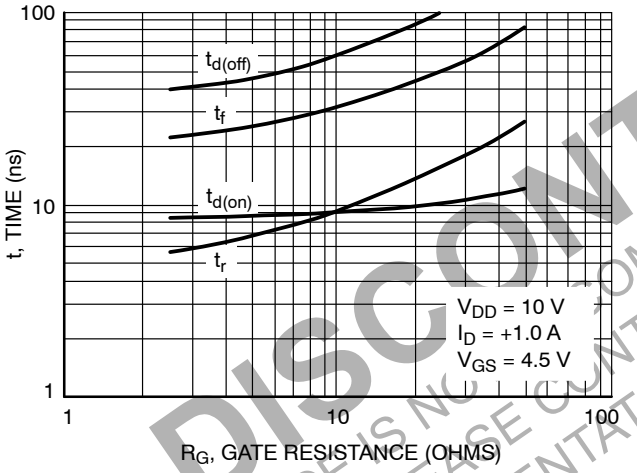

Figure 9. Resistive Switching Time Variation versus Gate Resistance

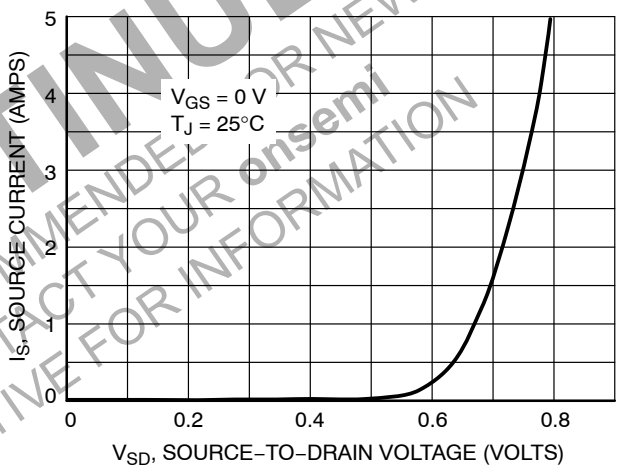

Figure 10. Diode Forward Voltage versus Current

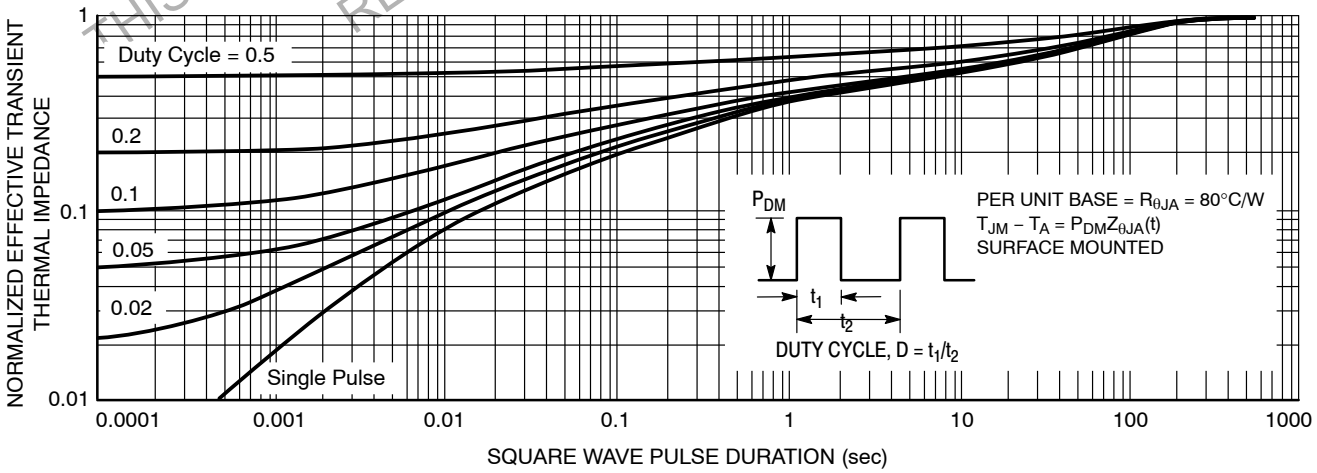

Figure 11. Normalized Thermal Transient Impedance, Junction−to−Ambient

DISCONTINUED
THIS DEVICE IS NO LONGER RECOMMENDED FOR NEW DESIGN
PLEASE CONTACT YOUR onsemi
REPRESENTATIVE FOR INFORMATION

SOLDERING FOOTPRINT*

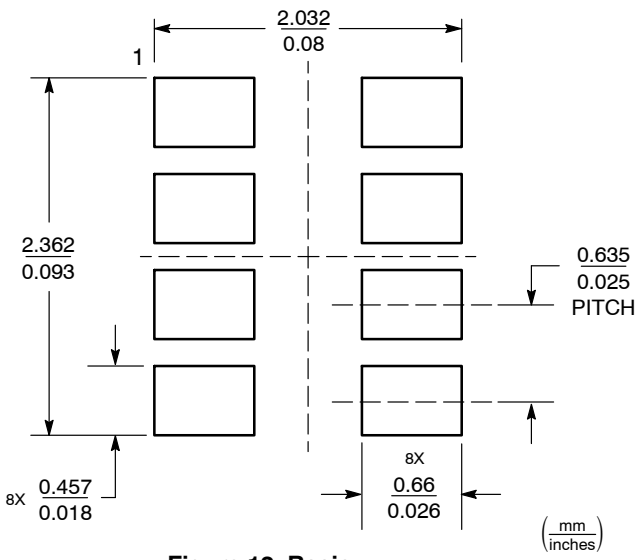

Figure 12. Basic

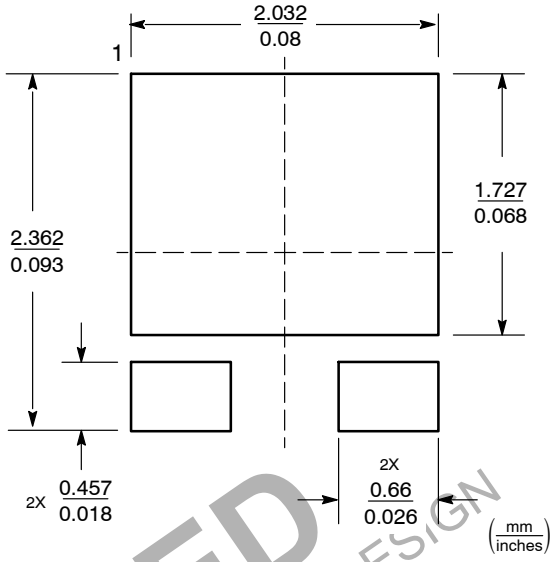

Figure 13. Style 1 and 4

ADDITIONAL SOLDERING FOOTPRINTS*

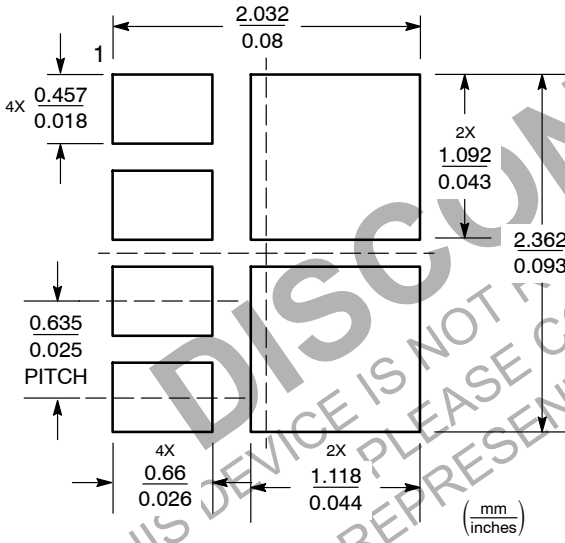

Style 2

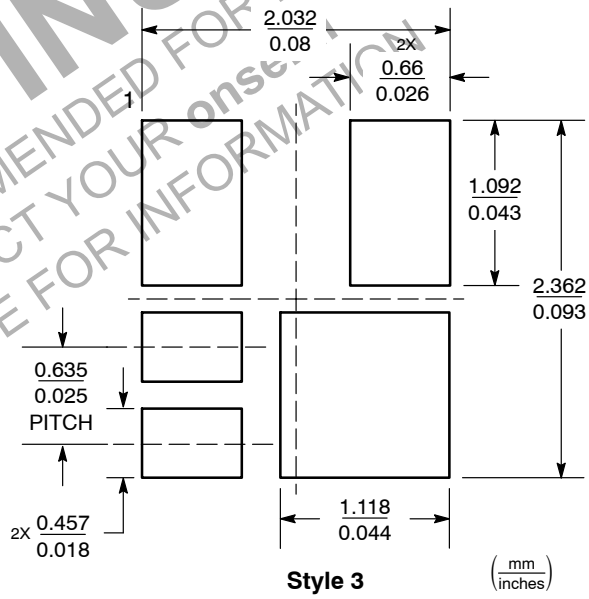

Style 3

DISCONTINUED
THIS DEVICE IS NOT RECOMMENDED FOR NEW DESIGN
PLEASE CONTACT YOUR onsemi
REPRESENTATIVE FOR INFORMATION

*For additional information on our Pb−Free strategy and soldering details, please download the ON Semiconductor Soldering and Mounting Techniques Reference Manual, SOLDERRM/D.

BASIC PAD PATTERNS

The basic pad layout with dimensions is shown in Figure 12. This is sufficient for low power dissipation MOSFET applications, but power semiconductor performance requires a greater copper pad area, particularly for the drain leads.

The minimum recommended pad pattern shown in Figure 13 improves the thermal area of the drain connections (pins 1, 2, 3, 6, 7, 8) while remaining within the confines of the basic footprint. The drain copper area is 0.0054 sq. in. (or 3.51 sq. mm). This will assist the power dissipation path away from the device (through the copper lead−frame) and into the board and exterior chassis (if applicable) for the single device. The addition of a further copper area and/or the addition of vias to other board layers will enhance the performance still further.

ChipFET™
CASE1206A−03
ISSUE K

DATE 19 MAY 2009

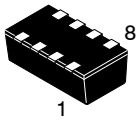

SCALE 1:1

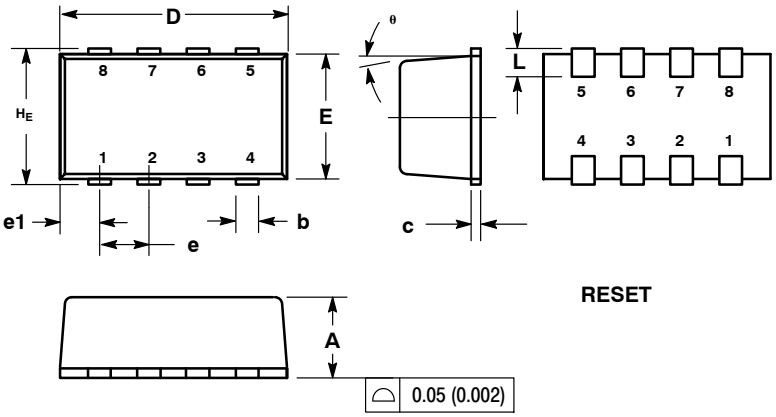

RESET

NOTES:
1. DIMENSIONING AND TOLERANCING PER ANSI Y14.5M, 1982.
2. CONTROLLING DIMENSION: MILLIMETER.
3. MOLD GATE BURRS SHALL NOT EXCEED 0.13 MM PER SIDE.
4. LEADFRAME TO MOLDED BODY OFFSET IN HORIZONTAL AND VERTICAL SHALL NOT EXCEED 0.08 MM.
5. DIMENSIONS A AND B EXCLUSIVE OF MOLD GATE BURRS.
6. NO MOLD FLASH ALLOWED ON THE TOP AND BOTTOM LEAD SURFACE.

	MILLIMETERS			INCHES		
DIM	MIN	NOM	MAX	MIN	NOM	MAX
A	1.00	1.05	1.10	0.039	0.041	0.043
b	0.25	0.30	0.35	0.010	0.012	0.014
c	0.10	0.15	0.20	0.004	0.006	0.008
D	2.95	3.05	3.10	0.116	0.120	0.122
E	1.55	1.65	1.70	0.061	0.065	0.067
e		0.65 BSC			0.025 BSC	
e1		0.55 BSC			0.022 BSC	
L	0.28	0.35	0.42	0.011	0.014	0.017
H_E	1.80	1.90	2.00	0.071	0.075	0.079
θ		5° NOM			5° NOM	

STYLE 1:
PIN 1. DRAIN
2. DRAIN
3. DRAIN
4. GATE
5. SOURCE
6. DRAIN
7. DRAIN
8. DRAIN

STYLE 2:
PIN 1. SOURCE 1
2. GATE 1
3. SOURCE 2
4. GATE 2
5. DRAIN 2
6. DRAIN 2
7. DRAIN 1
8. DRAIN 1

STYLE 3:
PIN 1. ANODE
2. ANODE
3. SOURCE
4. GATE
5. DRAIN
6. DRAIN
7. CATHODE
8. CATHODE

STYLE 4:
PIN 1. COLLECTOR
2. COLLECTOR
3. COLLECTOR
4. BASE
5. EMITTER
6. COLLECTOR
7. COLLECTOR
8. COLLECTOR

STYLE 5:
PIN 1. ANODE
2. ANODE
3. DRAIN
4. DRAIN
5. SOURCE
6. GATE
7. CATHODE
8. CATHODE

STYLE 6:
PIN 1. ANODE
2. DRAIN
3. DRAIN
4. GATE
5. SOURCE
6. DRAIN
7. DRAIN
8. CATHODE / DRAIN

SOLDERING FOOTPRINT

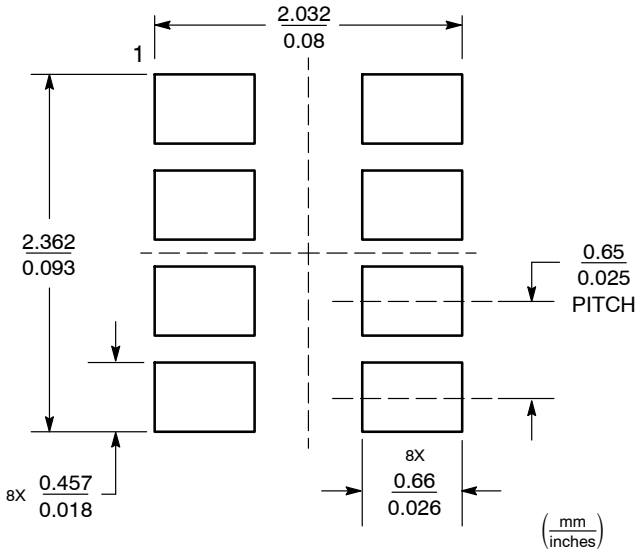

Basic Style

GENERIC MARKING DIAGRAM*



XXX = Specific Device Code
M = Month Code
▪ = Pb−Free Package
(Note: Microdot may be in either location)

*This information is generic. Please refer to device data sheet for actual part marking. Pb−Free indicator, “G” or microdot “▪”, may or may not be present. Some products may not follow the Generic Marking.

OPTIONAL SOLDERING FOOTPRINTS ON PAGE 2

DOCUMENT NUMBER:	**98AON03078D**	Electronic versions are uncontrolled except when accessed directly from the Document Repository. Printed versions are uncontrolled except when stamped “CONTROLLED COPY” in red.	
DESCRIPTION:	**ChipFET**		**PAGE 1 OF 2**

onsemi and onsemi are trademarks of Semiconductor Components Industries, LLC dba **onsemi** or its subsidiaries in the United States and/or other countries. **onsemi** reserves the right to make changes without further notice to any products herein. **onsemi** makes no warranty, representation or guarantee regarding the suitability of its products for any particular purpose, nor does **onsemi** assume any liability arising out of the application or use of any product or circuit, and specifically disclaims any and all liability, including without limitation special, consequential or incidental damages. **onsemi** does not convey any license under its patent rights nor the rights of others.

ChipFET™
CASE 1206A−03
ISSUE K

DATE 19 MAY 2009

ADDITIONAL SOLDERING FOOTPRINTS*

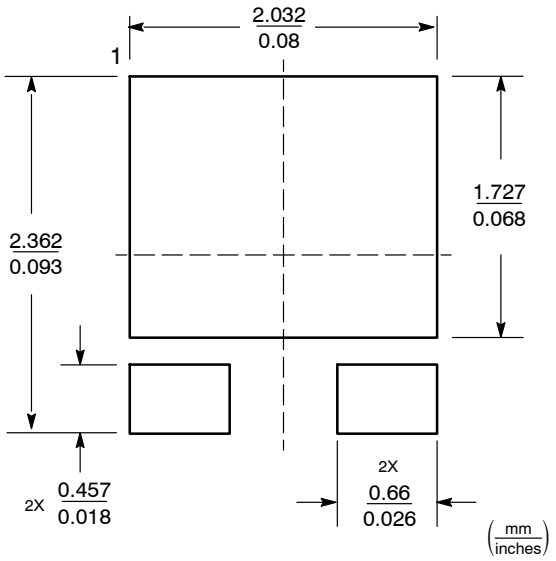

Styles 1 and 4

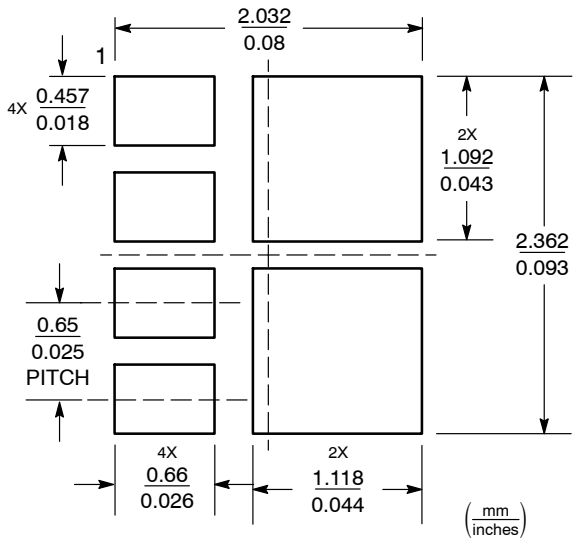

Style 2

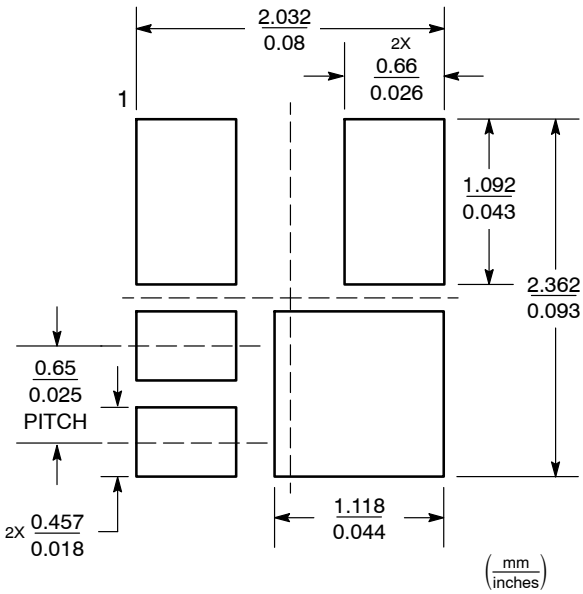

Style 3

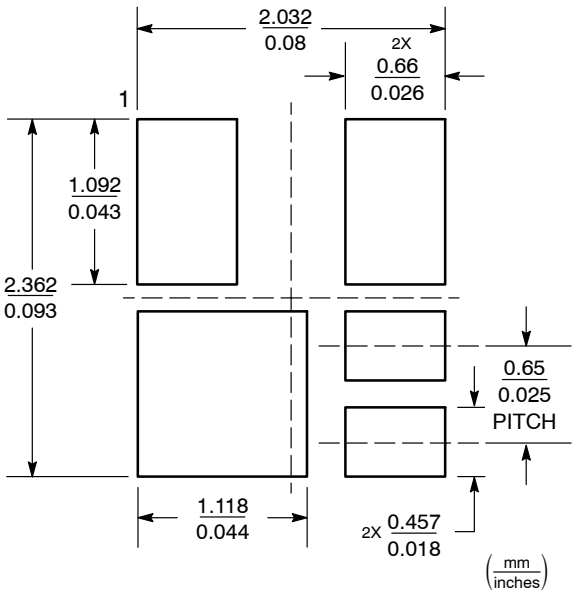

Style 5

*For additional information on our Pb−Free strategy and soldering details, please download the **onsemi** Soldering and Mounting Techniques Reference Manual, SOLDERRM/D.

DOCUMENT NUMBER:	**98AON03078D**	Electronic versions are uncontrolled except when accessed directly from the Document Repository. Printed versions are uncontrolled except when stamped "CONTROLLED COPY" in red.
DESCRIPTION:	**ChipFET**	**PAGE 2 OF 2**

onsemi and onsemi are trademarks of Semiconductor Components Industries, LLC dba **onsemi** or its subsidiaries in the United States and/or other countries. **onsemi** reserves the right to make changes without further notice to any products herein. **onsemi** makes no warranty, representation or guarantee regarding the suitability of its products for any particular purpose, nor does **onsemi** assume any liability arising out of the application or use of any product or circuit, and specifically disclaims any and all liability, including without limitation special, consequential or incidental damages. **onsemi** does not convey any license under its patent rights nor the rights of others.

© Semiconductor Components Industries, LLC, 2019

onsemi, , and other names, marks, and brands are registered and/or common law trademarks of Semiconductor Components Industries, LLC dba "**onsemi**" or its affiliates and/or subsidiaries in the United States and/or other countries. **onsemi** owns the rights to a number of patents, trademarks, copyrights, trade secrets, and other intellectual property. A listing of **onsemi**'s product/patent coverage may be accessed at www.onsemi.com/site/pdf/Patent−Marking.pdf. **onsemi** reserves the right to make changes at any time to any products or information herein, without notice. The information herein is provided "as−is" and **onsemi** makes no warranty, representation or guarantee regarding the accuracy of the information, product features, availability, functionality, or suitability of its products for any particular purpose, nor does **onsemi** assume any liability arising out of the application or use of any product or circuit, and specifically disclaims any and all liability, including without limitation special, consequential or incidental damages. Buyer is responsible for its products and applications using **onsemi** products, including compliance with all laws, regulations and safety requirements or standards, regardless of any support or applications information provided by **onsemi**. "Typical" parameters which may be provided in **onsemi** data sheets and/or specifications can and do vary in different applications and actual performance may vary over time. All operating parameters, including "Typicals" must be validated for each customer application by customer's technical experts. **onsemi** does not convey any license under any of its intellectual property rights nor the rights of others. **onsemi** products are not designed, intended, or authorized for use as a critical component in life support systems or any FDA Class 3 medical devices or medical devices with a same or similar classification in a foreign jurisdiction or any devices intended for implantation in the human body. Should Buyer purchase or use **onsemi** products for any such unintended or unauthorized application, Buyer shall indemnify and hold **onsemi** and its officers, employees, subsidiaries, affiliates, and distributors harmless against all claims, costs, damages, and expenses, and reasonable attorney fees arising out of, directly or indirectly, any claim of personal injury or death associated with such unintended or unauthorized use, even if such claim alleges that **onsemi** was negligent regarding the design or manufacture of the part. **onsemi** is an Equal Opportunity/Affirmative Action Employer. This literature is subject to all applicable copyright laws and is not for resale in any manner.

ADDITIONAL INFORMATION

TECHNICAL PUBLICATIONS:
Technical Library: www.onsemi.com/design/resources/technical−documentation
onsemi Website: www.onsemi.com

ONLINE SUPPORT: www.onsemi.com/support
For additional information, please contact your local Sales Representative at www.onsemi.com/support/sales