Ordering number : ENA2099A

STK404-120N-E

Thick-Film Hybrid IC

1ch class-AB Audio Power IC 120W

ON Semiconductor®

http://onsemi.com

Overview

The STK404-120N-E is a hybrid IC for the audio power amplifier that mounts discrete components as the audio power amplifier circuit in small space using the original Insulated Metal Substrate Technology IMST. The compact package has been achieved by adopting the low thermal resistance substrate (our conventional model kind ratio).

Application

- Audio Power use

Features

- Pin-to-pin compatible outputs ranging from 60W to 180W
- Miniature package
- Output load impedance: R_L = 6Ω recommended.
- Allowable load shorted time: 0.3 second
- Allows the use of predesigned applications for standby, mute, and the load short protection circuit.

Selection Guide

	STK404-070N-E	STK404-120N-E	STK404-140N-E
Output1 (10%/1kHz)	60W × 1ch	120W × 1ch	180W × 1ch
Output2 (1%/20Hz to 20kHz)	40W × 1ch	80W × 1ch	120W × 1ch
Maximum rating V_{CC} max (no sig.)	±46V	±65V	±78V
Maximum rating V_{CC} (6Ω)	±39V	±59V	±73V
Recommended operating V_{CC} (6Ω)	±30V	±41V	±51V
Package size	44.0mm×25.6mm×8.5mm	46.6mm×25.5mm×8.5mm	59.2mm×25.5mm×8.5mm

Specifications

Absolute Maximum Ratings at Ta = 25°C, Tc = 25°C unless otherwise specified

Parameter	Symbol	Conditions	Ratings	Unit
Power supply voltage 1	V_{CC} max1	Non- signal	±65	V
Power supply voltage 2	V_{CC} max2	Signal, R_L = 6Ω	±59	V
Thermal detector maximum voltage	Vp	1-4pin	16	V
Thermal detector maximum current	Ip	1-4pin	30	mA
Thermal resistance	θj-c	Per one power transistor	1.7	°C/W
Junction temperature	Tj max		150	°C
Operating substrate temperature	Tc max		125	°C
Storage temperature	Tstg		-30 to +125	°C
Allowable time for load short-circuit *4	ts	V_{CC} = ±41V, R_L = 6Ω, f = 50Hz P_O = 80W	0.3	s

Stresses exceeding Maximum Ratings may damage the device. Maximum Ratings are stress ratings only. Functional operation above the Recommended Operating Conditions is not implied. Extended exposure to stresses above the Recommended Operating Conditions may affect device reliability.

ORDERING INFORMATION

See detailed ordering and shipping information on page 11 of this data sheet.

Semiconductor Components Industries, LLC, 2013

Operating Characteristics at Tc = 25°C, R_L = 6Ω (Non-inductive load), Rg = 600Ω, VG = 30dB

Parameter	Symbol	Conditions					Ratings			Unit
		V_{CC} [V]	f [Hz]	P_O [W]	THD [%]		min	typ	max	
Output power	P_O 1	±41	20 to 20k		1.0		80			W
	P_O 2	±41	1k		10			120		
Frequency characteristics	f_L, f_H	±41		1.0		+0 -3dB		20 to 20k		Hz
Input impedance	ri	±41	1k	1.0				55		kΩ
Output noise voltage *3	V_{NO}	±49				Rg=10kΩ		1.2		mVrms
Output neutral voltage	V_N	±49					-100	0	+100	mV
Quiescent current	I_{CCO}	±49				No load			60	mA
Thermal detector resistance *2	Rp	Tp=25°C, 1-4pin						470		Ω
Thermal detector operate temperrature *2	Tp	Rp=4.7kΩ, 1-4pin						135		°C

[Note]

*1. All tests are measured using a constant-voltage supply unless otherwise specified.

*2. Thermal Detector temperature (+135°C±5°C) indicates the value at unusual operation, therefore, does not indicate the guaranteed value at usual operation.
Thermal Detector is PRF18series (AS characteristic) manufactured by MURATA.

*3. The output noise voltage is peak value of an average-reading meter with a rms value scale (VTVM).
A regulated AC supply (50Hz) should be used to eliminate the effects of AC primary line flicker noise.

*4. Allowable time for load short-circuit and output noise voltage are measured using the specified transformer power supply. About the load short circuit, it is designed assuming protecting by cut-off within 0.3 second.

*5. Weight of 1 HIC : 12.6g Outer carton dimensions (W×L×H) : 420mm×233mm×277mm

(Equivalent to MG-250)

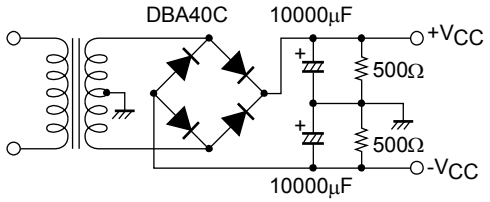

Package Dimensions

unit : mm (typ)

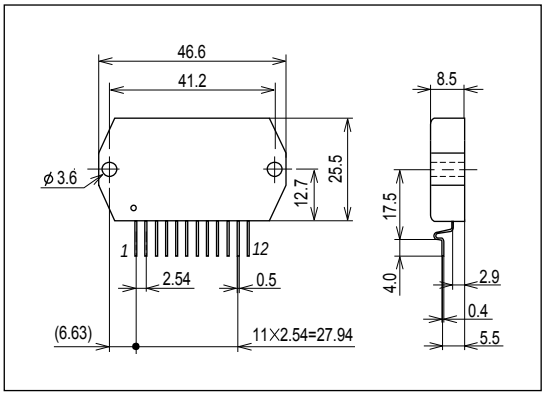

RoHS directive pass

Equivalent Circuit

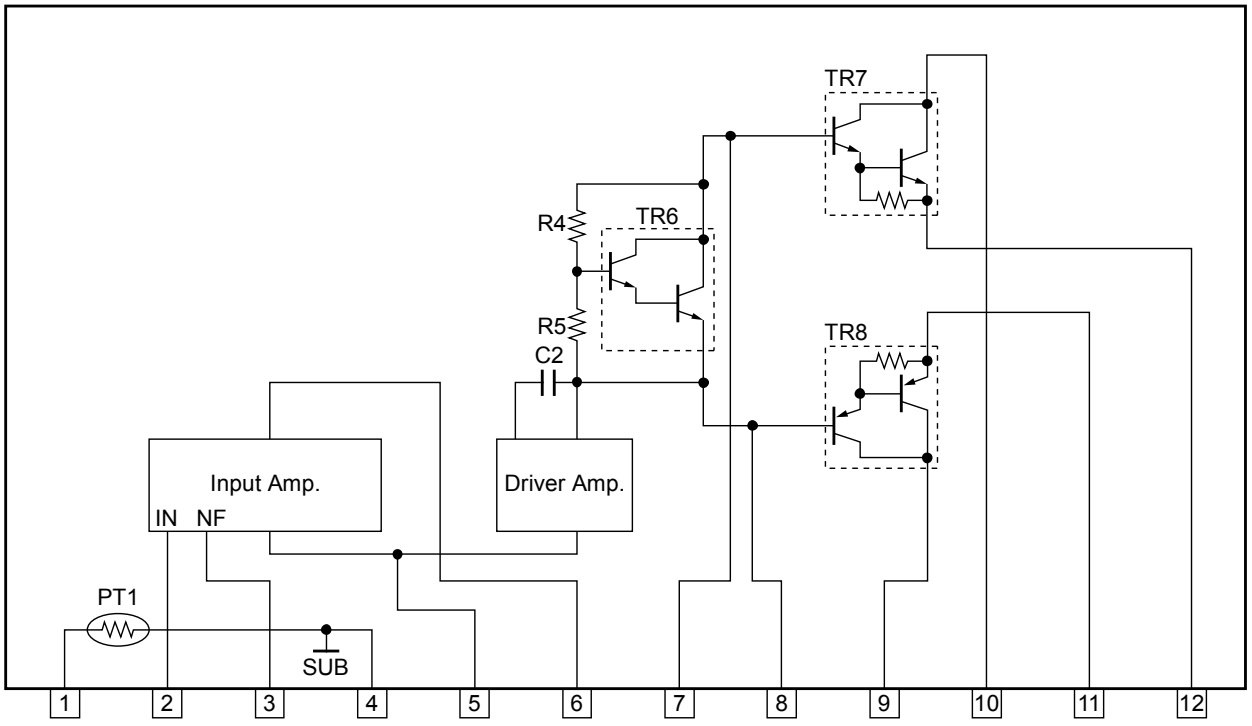

Test Circuit

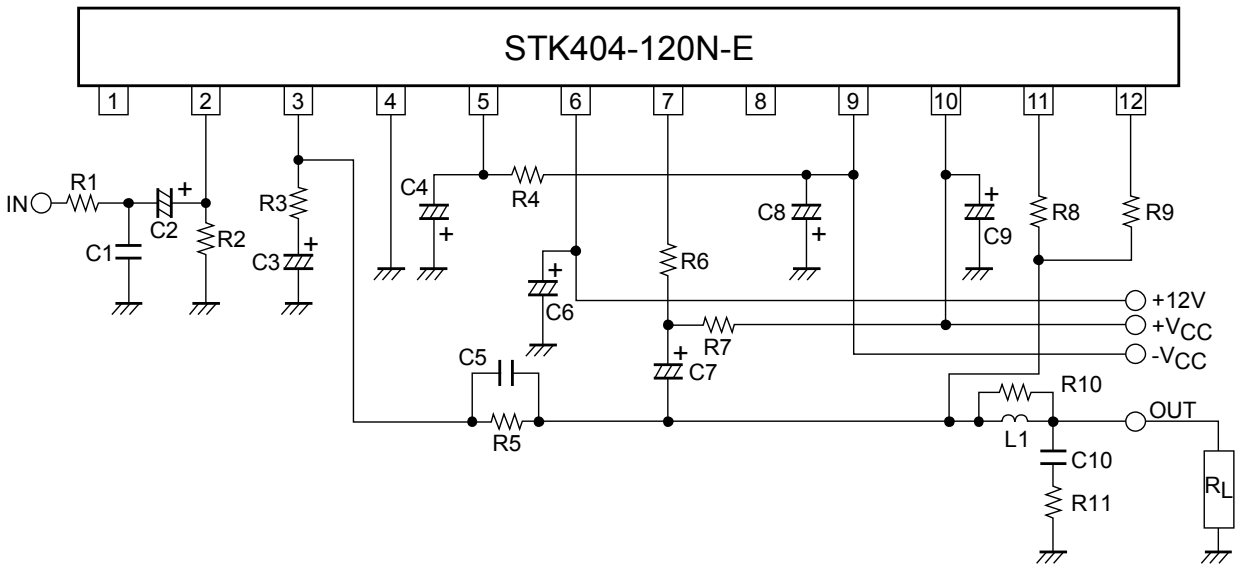

PCB Layout Example

Top view

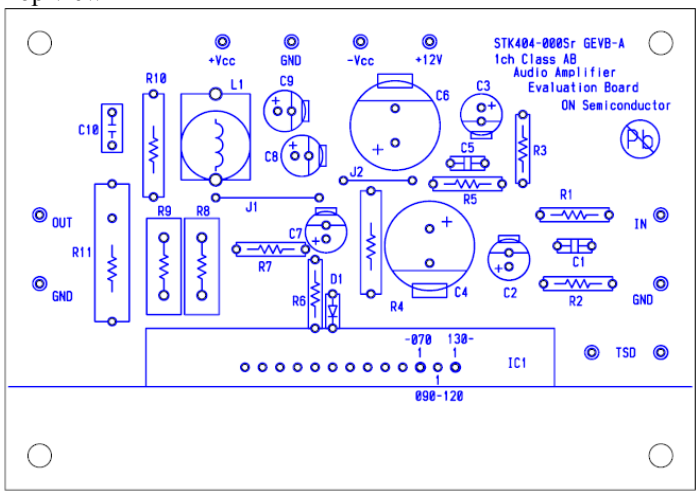

Top view

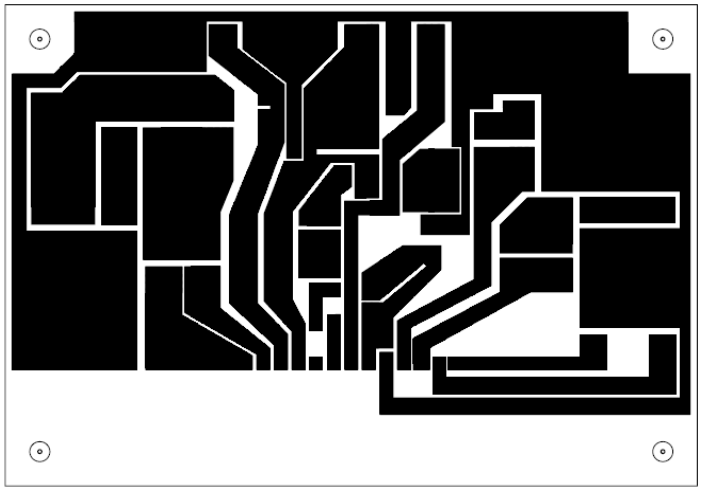

PCB Parts List

Type (IC1)	STK404-070N-E	STK404-120N-E	STK404-140N-E
Position of (1)pin	Third from the right end	Second from the right end	The right end
Location			
R1	1kΩ	←	←
R2	56kΩ	←	←
R3	1.8kΩ	←	←
R4	100Ω/1W	←	←
R5	56kΩ	←	←
R6	10kΩ/1W	4.7kΩ/1W	5.1kΩ/1W
R7	10kΩ/1W	4.7kΩ/1W	5.1kΩ/1W
R8	0.22Ω/5W	←	←
R9	-	0.22Ω/5W	←
R10	4.7Ω/1W	←	←
R11	4.7Ω/1W	←	←
C1	470pF	←	←
C2	2.2μF/50V	←	←
C3	10μF/50V	←	←
C4	100μF/100V	←	←
C5	5pF	←	←
C6	100μF/50V	←	←
C7	47μF/100V	←	←
C8	10μF/100V	←	←
C9	10μF/100V	←	←
C10	0.1μF	←	←
D1	200V/0.5A	Short	Short
L1	2.2μH	←	←
J1	15mm	←	←
J2	10mm	←	←

Pin Layout

[STK404-000Nsr Pin Layout]

		1	2	3	4	5	6	7	8	9	10
(Size) 44.0mm×25.6mm×8.5mm		1ch classAB/2.54mm									
STK404-070N 60W/JEITA		IN/CH1	NF/CH1	SUB	-PRE	+PRE	+powerTR	-powerTR	-VCC	+VCC	OUT/CH1

		1	2	3	4	5	6	7	8	9	10	11	12
(Size) 46.6mm×25.5mm×8.5mm		1ch classAB/2.54mm											
STK404-120N 120W/JEITA		TH	IN/CH1	NF/CH1	SUB	-PRE	+PRE	+powerTR	-powerTR	-VCC	+VCC	OUT/CH1-	OUT/CH1+

	1	2	3	4	5	6	7	8	9	10	11	12	13
(Size) 59.2mm×25.5mm×8.5mm	1ch classAB/2.54mm												
STK404-140N 180W/JEITA	TH1	TH2	IN/CH1	NF/CH1	SUB	-PRE	+PRE	+powerTR	-powerTR	-VCC	+VCC	OUT/CH1-	OUT/CH1+

Characteristic of Evaluation Board

THD-Po
STK404-120N-E

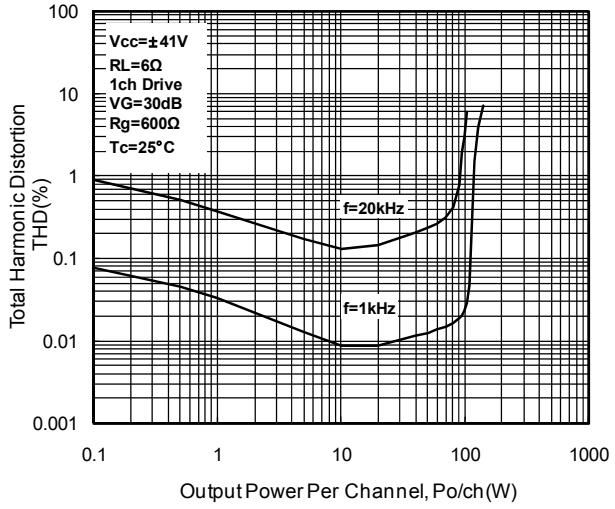

Pd-Po
STK404-120N-E

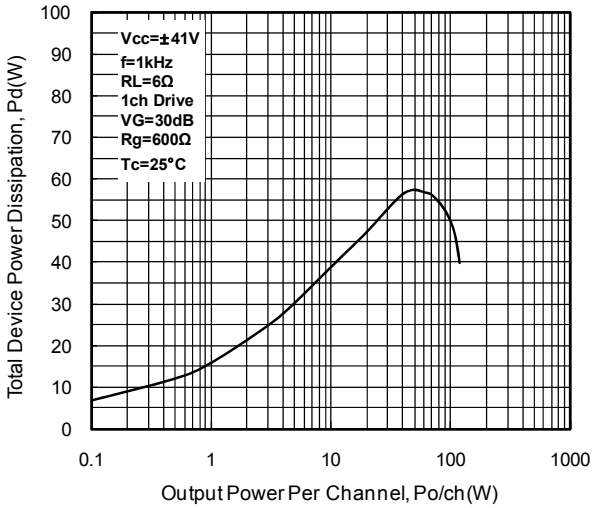

Po-Vcc
STK404-120N-E

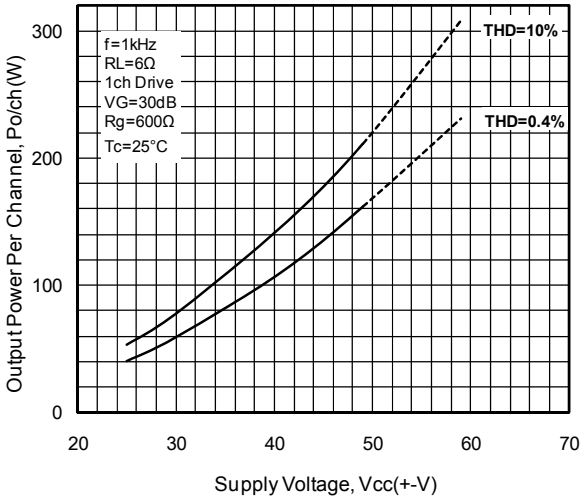

Po-f
STK404-120N-E

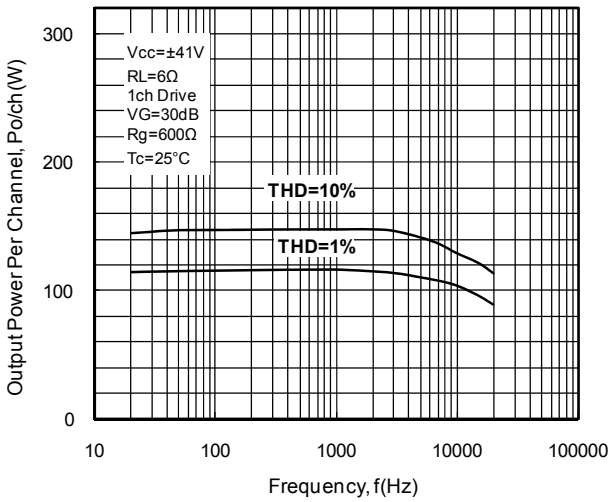

A Thermal Design Tip For STK404-120N-E Amplifier

[Thermal Design Conditions]

The thermal resistance (θc-a) of the heat-sink which manages the heat dissipation inside the Hybrid IC will be determined as follow:

(Condition 1) The case temperature (Tc) of the Hybrid IC should not exceed 125°C

$$Pd \times \theta c\text{-}a + Ta < 125°C \cdots\cdots (1)$$

Where Ta : the ambient temperature for the system

(Condition 2) The junction temperature of each power transistor should not exceed 150°C

$$Pd \times \theta c\text{-}a + Pd/N \times \theta j\text{-}c + Ta < 150°C \cdots\cdots (2)$$

Where N : the number of transistors (two for 1 channel , ten for channel)

θj-c : the thermal resistance of each transistor (see specification)

Note that the power consumption of each power transistor is assumed to be equal to the total power dissipation (Pd) divided by the number of transistors (N).

From the formula (1) and (2), we will obtain:

$$\theta c\text{-}a < (125 - Ta)/Pd \cdots\cdots (1)'$$

$$\theta c\text{-}a < (150 - Ta)/Pd - \theta j\text{-}c/N \cdots\cdots (2)'$$

The value which satisfies above formula (1)' and (2)' will be the thermal resistance for a desired heat-sink.

Note that all of the component except power transistors employed in the Hybrid IC comply with above conditions.

[Example of Thermal Design]

Generally, the power consumption of actual music signals are being estimated by the continuous signal of 1/8 P_O max. (Note that the value of 1/8 P_O max may be varied from the country to country.)

(Sample of STK404-120N-E ; 80W×1ch)

If V_{CC} is ±41V, and R_L is 6Ω, then the total power dissipation (Pd) of inside Hybrid IC is as follow;

$Pd = 37.5W$ (at 10W output power,1/8 of P_O max)

There are four (2) transistors in Audio Section of this Hybrid IC, and thermal resistance (θj-c) of each transistor is 1.7°C/W. If the ambient temperature (Ta) is guaranteed for 50°C, then the thermal resistance (θc-a) of a desired heat-sink should be;

From (1)' $\theta c\text{-}a < (125 - 50)/37.5$

< 2.00

From (2)' $\theta c\text{-}a < (150 - 50)/37.5 - 1.7/2$

< 1.82

Therefore, in order to satisfy both (1)' and (2)', the thermal resistance of a desired Heat-sink will be 1.82°C/W.

[Note]

Above are reference only. The samples are operated with a constant power supply. Please verify the conditions when your system is actually implemented.

STK404-000N-Eseries Stand-by control & Mute control Application

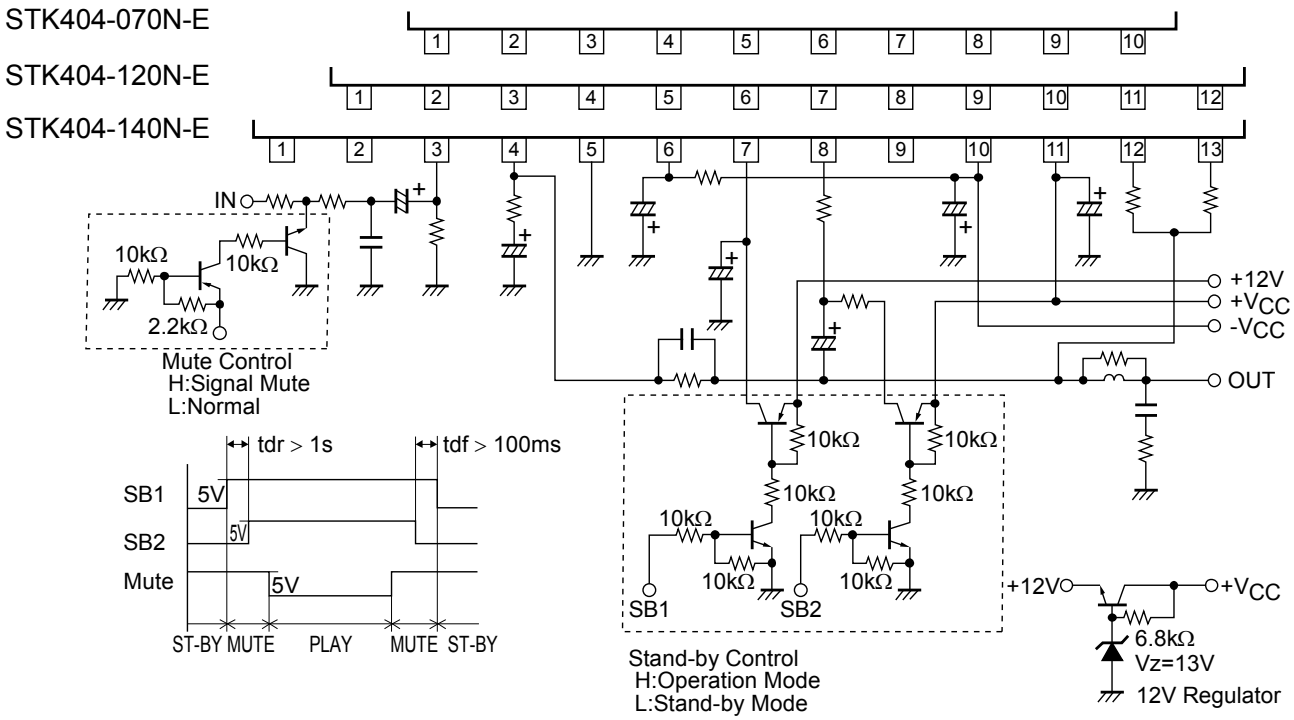

STK404-000N-Esr Thermal shut down Application

STK404-070N-E No thermal sensor

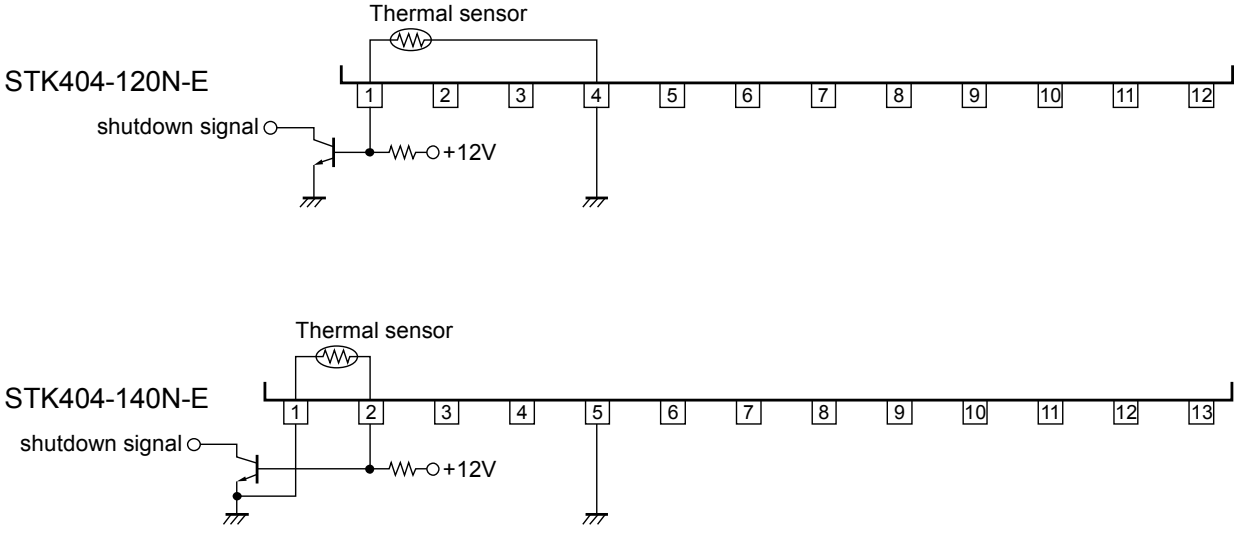

Thermal Sensor Characteristic

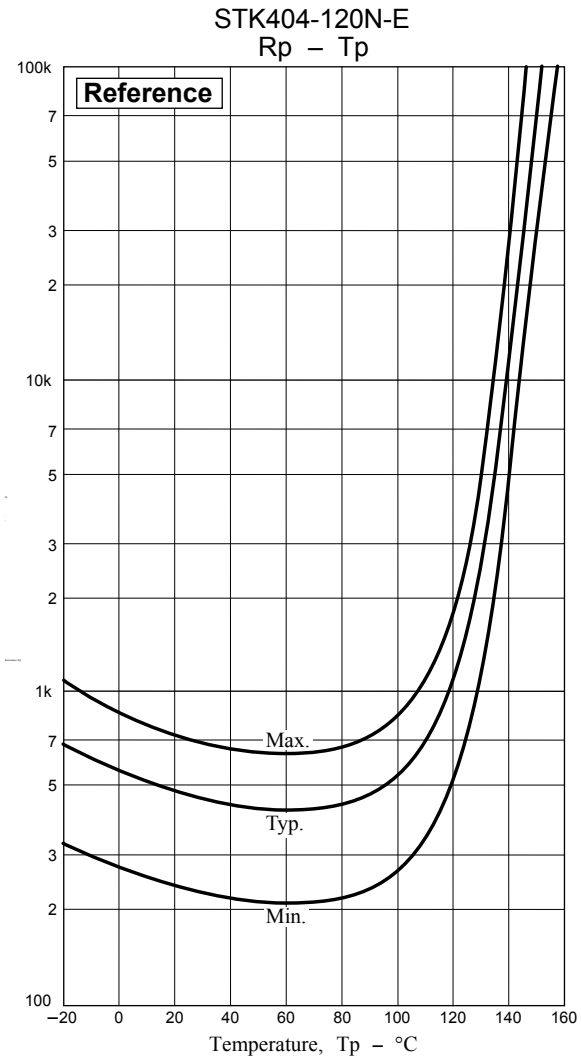

STK404-120N-E Road-Short & DC Voltage Protection Application

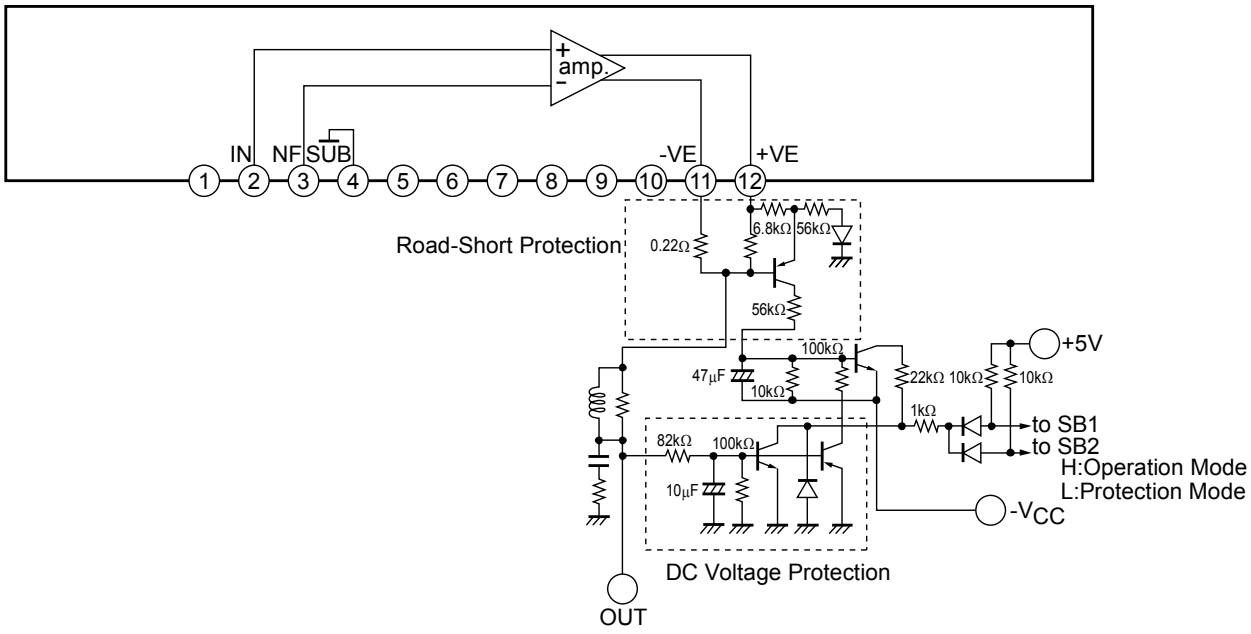

ORDERING INFORMATION

Device	Package	Shipping (Qty / Packing)
STK404-120N-E	SIP12 (Pb-Free)	25 / Bulk Box

ON Semiconductor and the ON logo are registered trademarks of Semiconductor Components Industries, LLC (SCILLC). SCILLC owns the rights to a number of patents, trademarks, copyrights, trade secrets, and other intellectual property. A listing of SCILLC's product/patent coverage may be accessed at www.onsemi.com/site/pdf/Patent-Marking.pdf. SCILLC reserves the right to make changes without further notice to any products herein. SCILLC makes no warranty, representation or guarantee regarding the suitability of its products for any particular purpose, nor does SCILLC assume any liability arising out of the application or use of any product or circuit, and specifically disclaims any and all liability, including without limitation special, consequential or incidental damages. "Typical" parameters which may be provided in SCILLC data sheets and/or specifications can and do vary in different applications and actual performance may vary over time. All operating parameters, including "Typicals" must be validated for each customer application by customer's technical experts. SCILLC does not convey any license under its patent rights nor the rights of others. SCILLC products are not designed, intended, or authorized for use as components in systems intended for surgical implant into the body, or other applications intended to support or sustain life, or for any other application in which the failure of the SCILLC product could create a situation where personal injury or death may occur. Should Buyer purchase or use SCILLC products for any such unintended or unauthorized application, Buyer shall indemnify and hold SCILLC and its officers, employees, subsidiaries, affiliates, and distributors harmless against all claims, costs, damages, and expenses, and reasonable attorney fees arising out of, directly or indirectly, any claim of personal injury or death associated with such unintended or unauthorized use, even if such claim alleges that SCILLC was negligent regarding the design or manufacture of the part. SCILLC is an Equal Opportunity/Affirmative Action Employer. This literature is subject to all applicable copyright laws and is not for resale in any manner.