Panasonic
INDUSTRY

PhotoMOS

RF SSOP C×R10
Voltage-sensitive

Product Catalog

IN Your Future

2022.5

RF SSOP C×R10 Voltage-sensitive

Space-saving SSOP 1 Form A type with built-in resistor 40 V load voltage

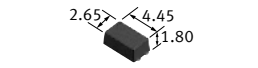

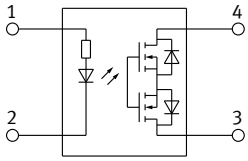

(Unit: mm)

FEATURES

- **Built-in input resistor means less man-hours when mounting**
- **Save space on PC board**
- **Both low on-resistance (Low Ron type) and low capacitance (Low Cout type) available at excellent electrical characteristics of C×R10**

TYPICAL APPLICATIONS

- **Measuring and testing equipment**
  Semiconductor testing equipment, Probe cards, Datalogger, Board tester and other testing equipment.
- **Telecommunication and broadcasting equipment**
- **Medical equipment**
- **Multi-point recorder**
  Data logger, Warping and Thermocouple, etc.

Note: Please contact our sales representative for automotive applications of PhotoMOS.

TYPES

Category	Type	Output rating*1		Part No.		Packing quantity
		Load voltage	Load current	Tape and reel packing style X*2	Tape and reel packing style 1Y	Tape and reel
AC/DC dual use	Low on-resistance (Low Ron type)	40 V	0.25 A	AQY221FR2VY	AQY221FR2V1Y	Packing style Y 1-reel: 3,500 pcs. Outer carton: 3,500 pcs.
	Low capacitance (Low Cout type)	40 V	0.12 A	AQY221FN2VY	AQY221FN2V1Y	Packing style 1Y 1-reel: 1,000 pcs. Outer carton: 1,000 pcs.

Note: For space reasons, the three initial letters of the part number "AQY", the package (SSOP) indication "V", and the packaging style "Y" are not marked on the device.
(Ex. the label for product number AQY221FR2VY is 221FR2.)

*1. Indicate the peak AC and DC values.
*2. Only tape and reel package is available.Tape and reel packing style Y: picked from the 1/4-pin side. For part numbers with picked from the 2/3-pin side, change the "Y" at the end to "W" when ordering.

RATING

■Absolute maximum ratings (Ambient temperature: 25°C)

Item		Symbol	AQY221FR2V	AQY221FN2V	Remarks
Input	Input voltage	V_{IN}	6 V		
	Input reverse voltage	V_{RIN}	5 V		
	Power dissipation	P_{in}	65 mW		
Output	Load voltage (peak AC)	V_L	40 V		
	Load current	I_L	0.25 A	0.12 A	Peak AC, DC
	Peak load current	I_{peak}	0.75 A	0.2 A	100 ms (1 shot), V_L = DC
	Power dissipation	P_{out}	250 mW		
Total power dissipation		P_T	300 mW		
I/O isolation voltage		V_{iso}	500 Vrms		
Ambient temperature (Operating)		T_{opr}	-40 to +85°C		(Avoid icing and condensation)
Ambient temperature (Storage)		T_{stg}	-40 to +100°C		
Junction temperature		T_j	125°C		

©Panasonic Industry Co., Ltd. 2022

■Electrical characteristics (Ambient temperature: 25°C)

Item			Symbol	AQY221FR2V	AQY221FN2V	Condition
Input	Operate voltage	Typical	V_{Fon}	1.3 V		AQY221FR2V: I_L = Max. AQY221FN2V: I_L = 80 mA
		Maximum		4 V		
	Turn off voltage	Minimum	V_{Foff}	0.8 V		
		Typical		1.3 V		
	Input current	Typical	I_{IN}	8.5 mA		V_{IN} = 5 V
Output	On resistance	Typical	R_{on}	0.75 Ω	9.5 Ω	AQY221FR2V: V_{IN} = 5 V, I_L = Max. AQY221FN2V: V_{IN} = 5 V, I_L = 80 mA Within 1 s
		Maximum		1.25 Ω	12.5 Ω	
	Output capacitance	Typical	C_{out}	12.5 pF	1 pF	V_{IN} = 0 V V_B = 0 V f = 1 MHz
		Maximum		18 pF	1.5 pF	
	Off state leakage current	Typical	I_{Leak}	0.02 nA	0.01 nA	V_{IN} = 0 V V_L = Max.
		Maximum		10 nA*1		
Transfer characteristics	Turn on time*2	Typical	T_{on}	0.05 ms	0.01 ms	AQY221FR2V: V_{IN} = 5 V, V_L = 10 V, R_L = 40 Ω AQY221FN2V: V_{IN} = 5 V, V_L = 10 V, R_L = 125 Ω
		Maximum		0.5 ms		
	Turn off time*2	Typical	T_{off}	0.06 ms	0.03 ms	
		Maximum		0.2 ms		
	I/O capacitance	Typical	C_{iso}	0.8 pF		f = 1 MHz V_B = 0 V
		Maximum		1.5 pF		f = 1 MHz V_B = 0 V
	Initial I/O isolation resistance	Minimum	R_{iso}	1,000 MΩ		500 V DC

Note: Variation possible through combinations of output capacitance and on resistance. For more information, please contact our sales representative.
*1. Available as custom orders (1 nA or less)
*2. Turn on/Turn off time

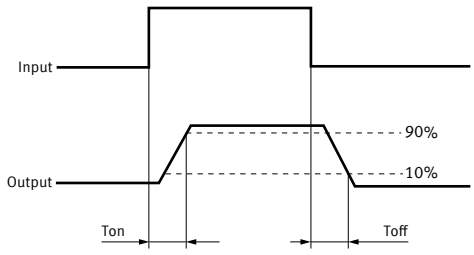

■Recommended operating conditions (Ambient temperature: 25°C)

Please use under recommended operating conditions to obtain expected characteristics.

Item		Symbol	Min.	Max.	Unit
Input voltage		V_{IN}	4.5	5.5	V
AQY221FR2V	Load voltage (Peak AC)	V_L	-	15	V
	Continuous load current	I_L	-	0.25	A
AQY221FN2V	Load voltage (Peak AC)	V_L	-	15	V
	Continuous load current	I_L	-	0.12	A

©Panasonic Industry Co., Ltd. 2022

REFERENCE DATA

1.Load current vs. ambient temperature characteristics

Allowable ambient temperature: −40 to +85°C

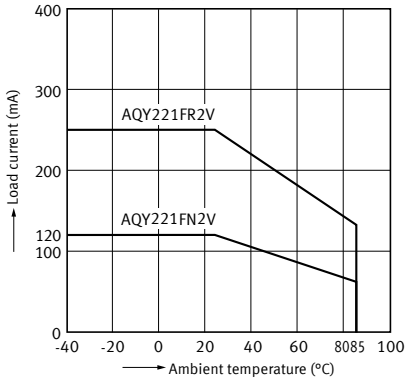

2.Load current vs. load voltage characteristics

Ambient temperature: 25°C

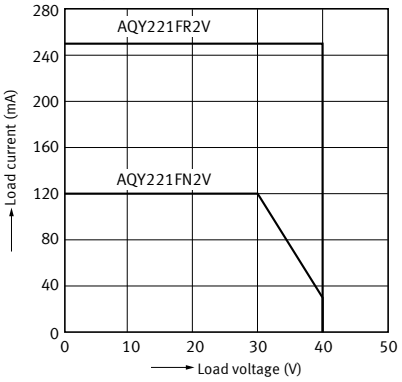

3.On resistance vs. ambient temperature characteristics

Measured portion: between terminals 3 and 4
Input voltage: 5 V; Load voltage: 10 V (DC);
Continuous load current: 250 mA (DC) Low Ron type,
80 mA (DC) Low Cout type

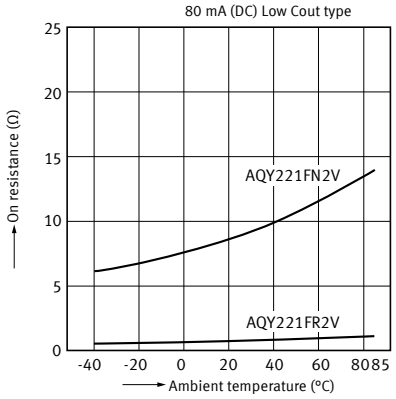

4.Turn on time vs. ambient temperature characteristics

Input voltage: 5 V; Load voltage: 10 V (DC);
Continuous load current: 250 mA (DC) Low Ron type,
80 mA (DC) Low Cout type

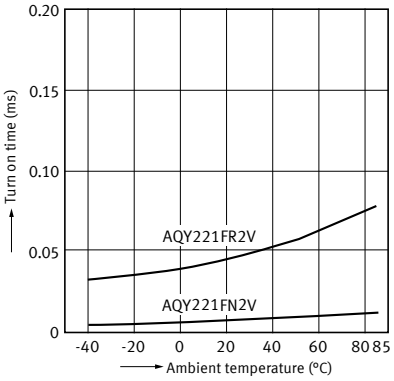

5.Turn off time vs. ambient temperature characteristics

Input voltage: 5 V; Load voltage: 10 V (DC);
Continuous load current: 250 mA (DC) Low Ron type,
80 mA (DC) Low Cout type

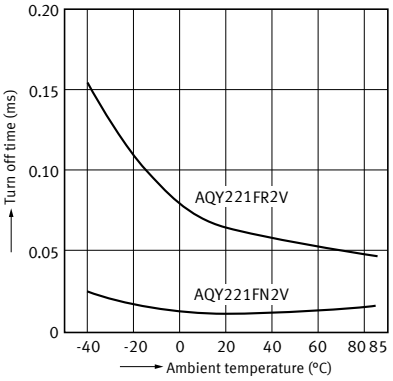

6.Operate voltage vs. ambient temperature characteristics

Load voltage: 10 V (DC);
Continuous load current: 250 mA (DC) Low Ron type,
80 mA (DC) Low Cout type

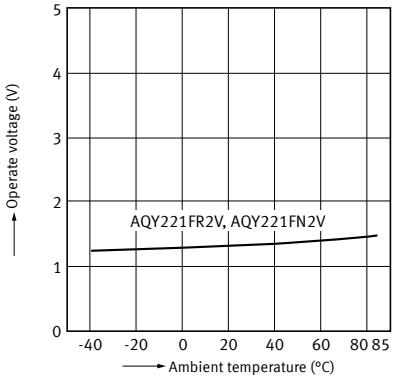

7.Turn off voltage vs. ambient temperature characteristics

Load voltage: 10 V (DC);
Continuous load current: 250 mA (DC) Low Ron type,
80 mA (DC) Low Cout type

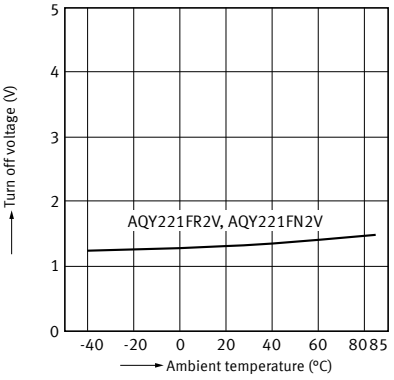

8.Input current vs. ambient temperature characteristics

Sample: All types
Input voltage: 5 V

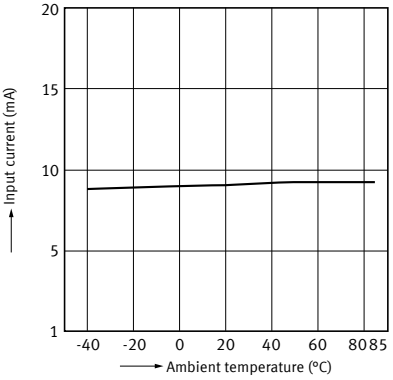

©Panasonic Industry Co., Ltd. 2022

9.Current vs. voltage characteristics of output at MOS portion

Measured portion: between terminals 3 and 4
Ambient temperature: 25°C

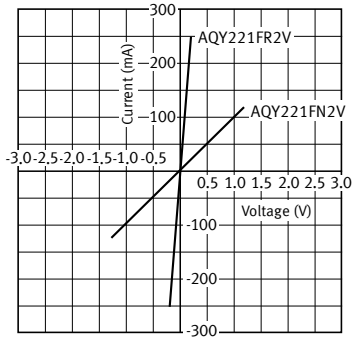

10.Input current vs. input voltage characteristics

Sample: All types
Ambient temperature: 25°C
(Recommended input voltage: 5±0.5 V)

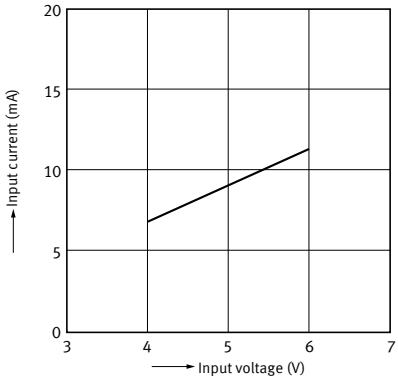

11.Off state leakage current vs. load voltage characteristics

Measured portion: between terminals 3 and 4
Ambient temperature: 25°C

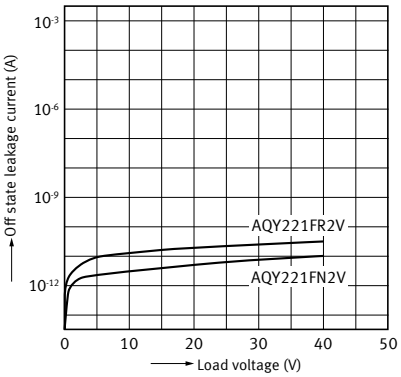

12.Turn on time vs. input voltage characteristics

Measured portion: between terminals 3 and 4
Load voltage: 10 V (DC);
Continuous load current: 250 mA (DC) Low Ron type,
80 mA (DC) Low Cout type; Ambient temperature: 25°C

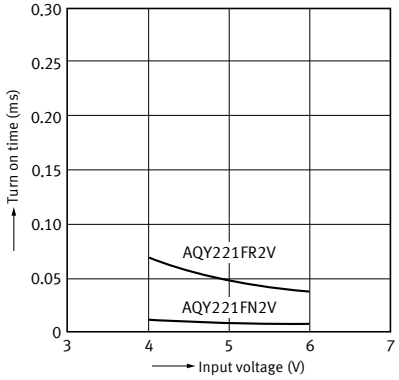

13.Turn off time vs. input voltage characteristics

Measured portion: between terminals 3 and 4
Load voltage: 10 V (DC);
Continuous load current: 250 mA (DC) Low Ron type,
80 mA (DC) Low Cout type; Ambient temperature: 25°C

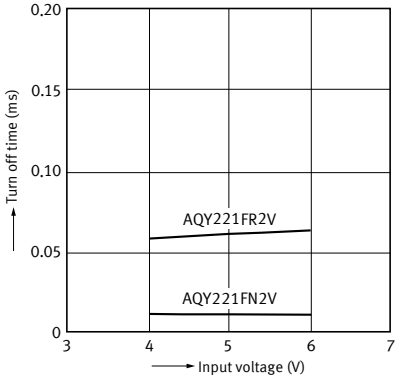

14.Output capacitance vs. applied voltage characteristics

Measured portion: between terminals 3 and 4
Frequency: 1 MHz, 30 mVrms;
Ambient temperature: 25°C

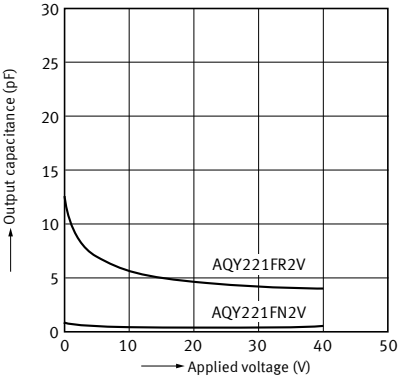

15.Isolation vs. frequency characteristics (50Ω impedance)

Measured portion: between terminals 3 and 4
Ambient temperature: 25°C

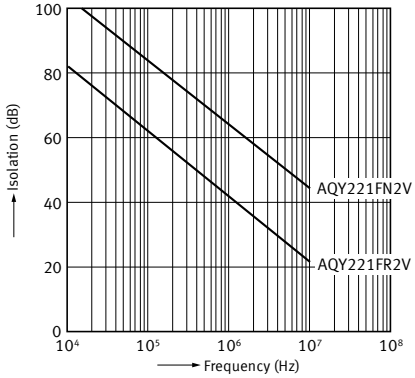

16.Insertion loss vs. frequency characteristics (50Ω impedance)

Measured portion: between terminals 3 and 4
Ambient temperature: 25°C

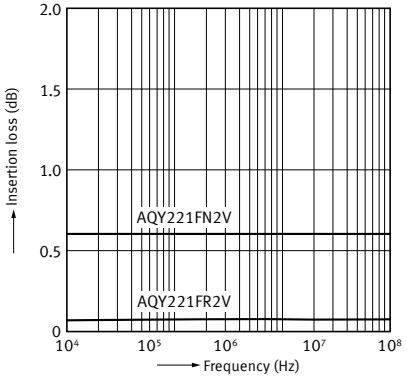

DIMENSIONS

CAD The CAD data of the products with a "CAD" mark can be downloaded from our Website. Unit: mm

CAD



External dimensions

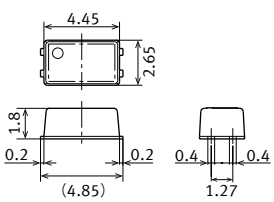

Terminal thickness: t = 0.15
General tolerance: ±0.1

Recommended mounting pad (TOP VIEW)

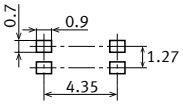

Tolerance: ±0.1

©Panasonic Industry Co., Ltd. 2022

SCHEMATIC AND WIRING DIAGRAMS

Schematic	Output configuration	Load type	Connection	Wiring diagram
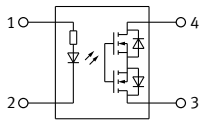	1 Form A	AC/DC	-	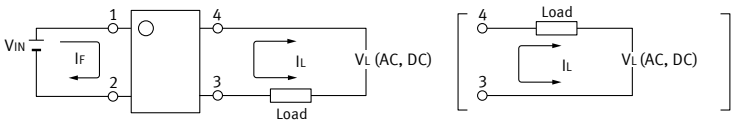

Please refer to **"the latest product specifications"** when designing your product.
•Requests to customers:
https://industrial.panasonic.com/ac/e/salespolicies/

©Panasonic Industry Co., Ltd. 2022

⚠SAFETY WARNINGS

- Do not use the product under conditions that exceed the range of its specifications. It may cause overheating, smoke, or fire.
- Do not touch the recharging unit while the power is on. There is a danger of electrical shock. Be sure to turn off the power when performing mounting, maintenance, or repair operations on the device (including connecting parts such as the terminal board and socket).
- Check the wiring diagrams in the catalog and be sure to connect the terminals correctly. If the device is energized with short circuit or any wrong connection, it may cause unexpected malfunction, abnormal heat or fire.

PhotoMOS® Cautions for Use

■Derating design

Derating is a significant factor for reliable design and product life. Even if the conditions of use (temperature, current, voltage, etc.) of the product are within the absolute maximum ratings, reliability may be lowered remarkably when continuously used in high load conditions (high temperature, high humidity, high current, high voltage, etc.) Therefore, please derate sufficiently below the absolute maximum ratings and evaluate the device in the actual condition.

Moreover, regardless of the application, if malfunctioning can be expected to pose high risk to human life or to property, or if products are used in equipment otherwise requiring high operational safety, in addition to designing double circuits, that is, incorporating features such as a protection circuit or a redundant circuit, safety testing should also be carried out.

■Applying stress that exceeds the absolute maximum rating

If the voltage or current value for any of the terminals exceeds the absolute maximum rating, internal elements will deteriorate because of the overvoltage or overcurrent. In extreme cases, wiring may melt, or silicon P/N junctions may be destroyed.

Therefore, the circuit should be designed in such a way that the load never exceed the absolute maximum ratings, even momentarily.

■Input voltage (for Voltage-sensitive type)

For rising and dropping ratio of input voltage(dv/dt), maintain Min. 100mV/ms.

■Oscillation circuit and control circuit (for CC Type)

The oscillation circuit and control circuit of product may be destroyed by external noise, surge, static electricity and so on.

For noise effect to peripheral circuits when oscillation circuit operates, please implement safety measures on the system before use by verifying operation under the actual design.

■Deterioration and destruction caused by discharge of static electricity

This phenomenon is generally called static electricity destruction, and occurs when static electricity generated by various factors is discharged while the PhotoMOS® terminals are in contact, producing internal destruction of the element.

To prevent problems from static electricity, the following precautions and measures should be taken when using your device.

1) Employees handling PhotoMOS® should wear anti-static clothing and should be grounded through protective resistance of 500kΩ to 1MΩ.
2) A conductive metal sheet should be placed over the worktable. Measuring instruments and jigs should be grounded.
3) When using soldering irons, either use irons with low leakage current, or ground the tip of the soldering iron. (Use of low-voltage soldering irons is also recommended.)
4) Devices and equipment used in assembly should also be grounded.
5) When packing printed circuit boards and equipment, avoid using high-polymer materials such as foam styrene, plastic, and other materials which carry an electrostatic charge.
6) When storing or transporting PhotoMOS®, the environment should not be conducive to generating static electricity (for instance, the humidity should be between 45% and 60%), and PhotoMOS® should be protected using conductive packing materials.

■Unused terminals

The No. 3 terminal is used with the circuit inside the device. Therefore, do not connect it to the external circuitry with either connection method A, B or C. (1 Form A 6-pin type)

■Short across terminals

Do not short circuit between terminals when device is energized, since there is possibility of breaking of the internal IC.

■Surge voltages at the input

If reverse surge voltages are present at the input terminals, connect a diode in reverse parallel across the input terminals and keep the reverse voltages below the reverse breakdown voltage.

Typical circuits are below shown.

1) 6-pin

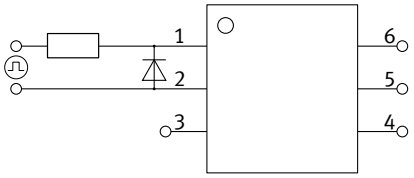

2) Power type

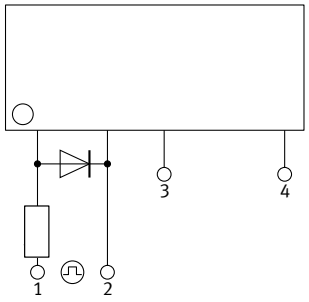

■Reverse voltages at the input (for CC Type)

If reverse voltages are present at the input terminals, for example, connect a schottky barrier diode in reverse parallel across the input terminals and keep the reverse voltages below the reverse breakdown voltage. Typical circuit is shown below.

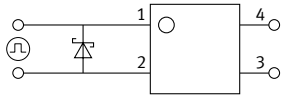

©Panasonic Industry Co., Ltd. 2022

■Recommended LED forward current or recommended input voltage

Design in accordance with the recommended operating conditions for each product.

Since these conditions are affected by the operating environment, ensure conformance with all relevant specifications.

■LED forward current vs. Ambient temperature characteristics

Please keep the LED forward current to within the range given below.

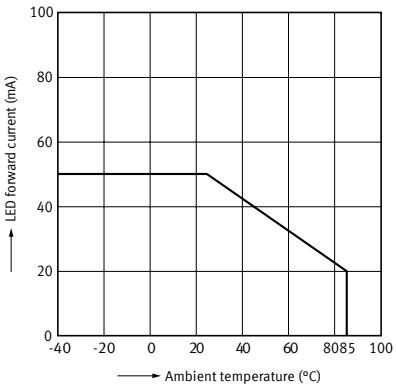

For AQV209G, APV1111GV, APV3111GV

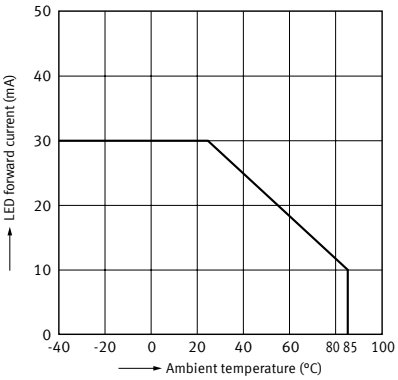

■Ripple in the input power supply

If ripple is present in the input power supply, observe the following:

1) For LED forward current at E_{min}, please maintain the value mentioned at "■Recommended LED forward current."

2) Please make sure the LED forward current for E_{max}. is no higher than 50 mA.

3) Please maintain the input voltage at least 4V for E_{min}. (GU, RF and Power voltage-sensitive type).

4) Please make sure the input voltage for E_{max}. is no higher than 6V (GU and RF voltage-sensitive type).

5) Please make sure the input voltage for E_{max}. is no higher than 30V (Power voltage-sensitive type).

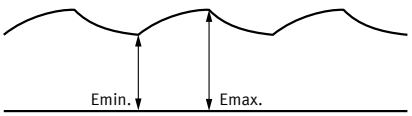

6) Please maintain the input voltage at least 3V for E_{min}. (for CC Type)

7) Please make sure the input voltage for E_{max}. is no higher than 5.5V. (for CC Type)

8) Please keep amplitude voltage of ripple within ±0.5V. (for CC Type)

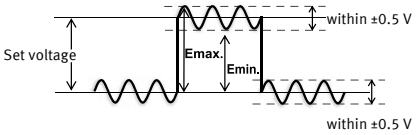

■Output spike voltages

1) If an inductive load generates spike voltages which exceed the absolute maximum rating, the spike voltage shall be limited. Representative circuit examples of AC/DC dual use type are shown below. There are the same with DC only type.

(1) 6-pin

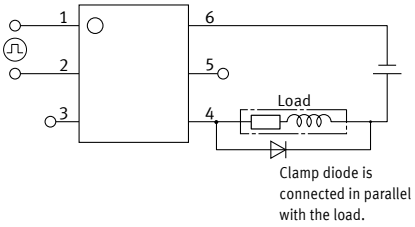

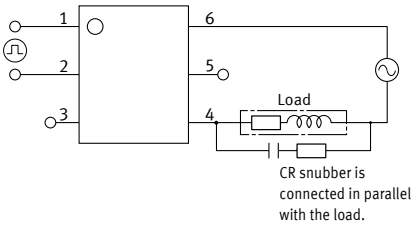

(2) Power type

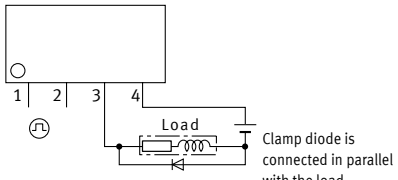

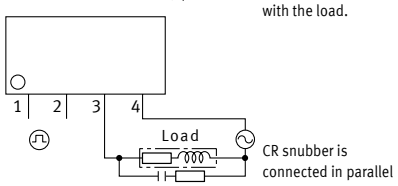

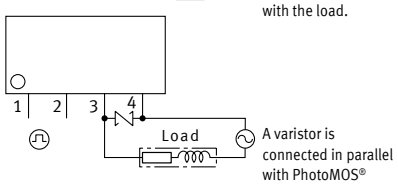

(3) CC Type

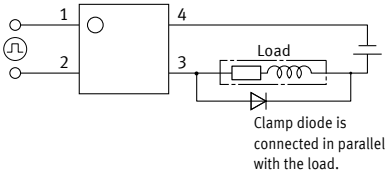

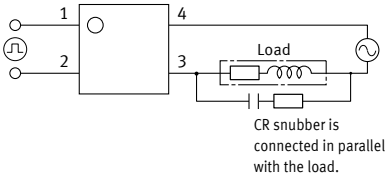

2) When Clamp diode or CR Snubber is used in the circuit, the spike voltages from the load are limited. But the longer wire may become the inductance and cause the spike voltage. Keep the wire as short as possible.

©Panasonic Industry Co., Ltd. 2022

■Output Waveform (CC Type)

This product has the capacitor coupled isolation. Therefore, if output waveform fluctuates along the time axis (e.g. AC waveform or pulsating waveform), it may affect the operation of this product and peripheral circuit. Please evaluate the device in the actual condition.

■Continual DC bias (AQV259 and AQV258)

If a continual DC bias will be applied between the input and output, the breakdown voltage of the switching element MOSFET on the output side may degrade. Therefore, be sure to test the product under actual conditions. Example of circuits that will cause degradation of breakdown voltage of MOSFET is given below.

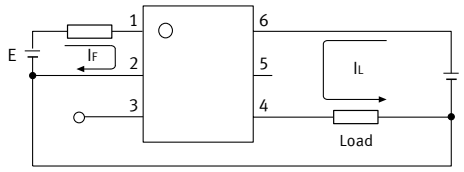

■Connections Between Input and Output (CC Type)

If you wish to use the product with a connection between input and output, you may not obtain expected performance. Therefore, please be sure to evaluate the device in the actual usage. A circuit example is shown below that may negatively affect PhotoMOS characteristics.

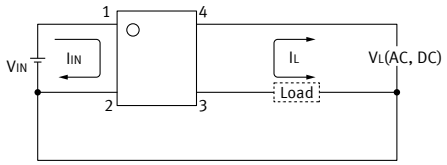

■Cleaning solvents compatibility

Cleaning the solder flux should use the immersion washing with an organic solvent. If you have to use ultrasonic cleaning, please adopt the following conditions and check that there are no problems in the actual usage.

- Frequency: 27 to 29kHz
- Ultrasonic output: No greater than 0.25W/cm²*
- Cleaning time: 30s or less
- Others: Float PCB and the device in the cleaning solvent to prevent from contacting the ultrasonic vibrator

* Applies to unit area ultrasonic output for ultrasonic baths

■Notes for mounting

1) When different kinds of packages are mounted on PC boad, temperature rise at soldering lead is highly dependent on package size. Therefore, please set the lower temperature soldering condition than the conditions of item "■Soldering", and confirm the temperature condition of actual usage before soldering.
2) When soldering condition exceeds our recommendation, the PhotoMOS® characteristics may be adversely affected. It may occur package crack or bonding wire breaking because of thermal expansion unconformity and resin strength reduction. Please contact our sales office about the propriety of the condition.
3) Please confirm the heat stress by using actual board because it may be changed by board condition or manufacturing process condition.
4) Solder creepage, wettability, or soldering strength will be affected by the soldering condition or used soldering type. Please check them under the actual production condition in detail.
5) Please apply coating when the device returns to a room temperature.

■Input wiring pattern

1) With AQY* or AQW* series avoid installing the input (LED side) wiring pattern to the bottom side of the package if you require the specified I/O isolation voltage (V_{iso}) after mounting the PC board. Since part of the frame on the output side is exposed, it may cause fluctuations in the I/O isolation voltage.

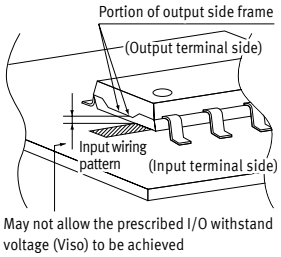

* Excluding high I/O isolation voltage products and SSOP, SON, and TSON packages

2) Exposed terminals are electrically connected to internal elements. Be aware that contact with external circuits may cause deterioration of insulation between input and output, leading to destruction of internal elements.
3) If installed in proximity to other device, take care to avoid short circuits between device, which may occur if exposed frames of adjacent device come too close.

©Panasonic Industry Co., Ltd. 2022

■Soldering

1) Example of surface-mount terminal recommended conditions

(1) IR (Infrared reflow) soldering method

In case of automatic soldering, following conditions should be observed. (recommended condition reflow: Max. 2 times, measurement point: soldering lead)

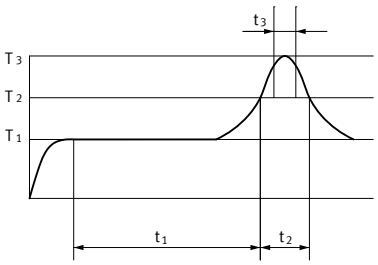

T1 = 150 to 180°C
T2 = 230°C
T3 = 240 to 250°C*
t1 = 60 to 120 s
t2 = Within 30 s
t3 = Within 10 s
*240 to 245°C for SON, VSSOP and TSON package

(2) Other soldering methods

Other soldering methods (VPS, hot-air, hot plate, laser heating, pulse heater, etc.) affect the PhotoMOS® characteristics differently, please evaluate the device under the actual usage.

(3) Manual soldering method

Temperature: 350 to 400°C, within 3s, electrical power 30 to 60W

2) Example of through hole terminal recommended conditions

(1) DWS soldering method

In case of automatic soldering, following conditions should be observed. (recommended condition number of times: Max. 1 time, measurement point: soldering lead *1)

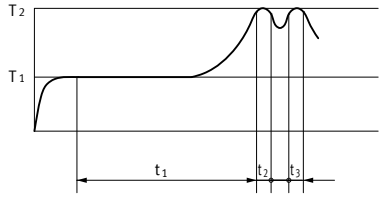

T_1 = 120°C
T_2 = Max. 260°C
t_1 = within 60 s
t_2+t_3 = within 5 s

*1 Solder temperature: Max. 260°C

(2) Other soldering method (recommended condition: 1 time)

Preheating: Max. 120°C, within 120s, measurement point: soldering lead

Soldering: Max. 260°C, within 10s, measurement area: soldering temperature

(3) Manual soldering method

Temperature: 350 to 400°C, within 3s, electrical power 30 to 60W

■About the exposed terminals on the sides of the package (for VSSOP)

For VSSOP type, as shown in the following figure, part of the input and output frames are exposed on the sides of the package. Due to this, please be keep in mind the cautions listed below.

1) Take care to avoid short circuits between exposed terminals, which may cause insulation deterioration between input and output, leading to destruction of internal elements.
2) Since the exposed terminals are connected electrically to the internal element, please refer to the item "■Deterioration and destruction caused by discharge of static electricity", and implement sufficient measures to control static electricity.
3) When installing the devices in the vicinity, please keep in mind that if the exposed frames of adjacent devices get too close, a short between devices may occur.

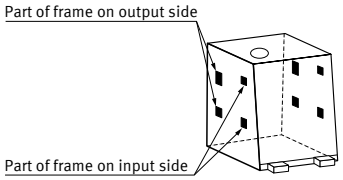

■Adjacent mounting

When several PhotoMOS® are mounted closely each other or heat-generating components are mounted close to the PhotoMOS®, the abnormal heating may occur. This abnormal heat may be caused by the internal element when energized or thermal interference between the devices. The degree of temperature rise depends on the mounting layout of the devices and usage condition, therefore please be sure to use PhotoMOS® with reduced load current after testing under the worst condition of the actual usage.

■Transportation and storage

1) Extreme vibration during transport may deform the lead or damage the PhotoMOS® characteristics. Please handle the outer and inner boxes with care.
2) Inadequate storage condition may degrade soldering, appearance, and characteristics. The following storage conditions are recommended:
   • Temperature: 0 to 45°C
   • Humidity: Max. 70%RH
   • Atmosphere: No harmful gasses such as sulfurous acid gas, minimal dust.
3) Storage before TSON, VSSOP, SON, SSOP, or SOP processing
   In case the heat stress of soldering is applied to the PhotoMOS® which absorbs moisture inside of its package, the evaporation of the moisture increases the pressure inside the package and it may cause the package blister or crack. This device is sensitive to moisture and it is packed in the sealed moisture-proof package. Please make sure the following condition after unsealing.
   * Please use the device immediately after unsealing.
   (Within 30 days at 0 to 30°C and Max. 70%RH)
   * If the device will be kept for a long time after unsealing, please store in the another moisture-proof package containing silica gel. (Please use within 90 days.)

■Water condensation

Water condensation occurs when the ambient temperature changes suddenly from a high temperature to low temperature at high humidity, or the device is suddenly transferred from a low ambient temperature to a high temperature and humidity. Condensation causes the failures such as insulation deterioration. Panasonic Industry Co., Ltd. does not guarantee the failures caused by water condensation. The heat conduction by the equipment the PhotoMOS® is mounted may accelerate the water condensation. Please confirm that there is no condensation in the worst condition of the actual usage. (Special attention should be paid when high temperature heating parts are close to the PhotoMOS®.)

©Panasonic Industry Co., Ltd. 2022

■Packing format

1) Tape and reel

	Tape dimensions	Dimensions of tape reel
TSON 4-pin	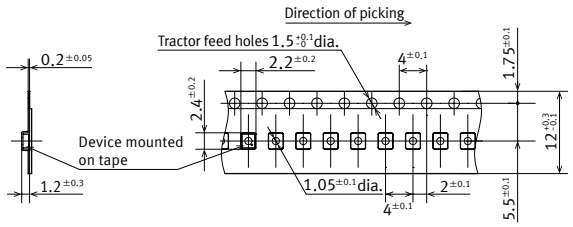	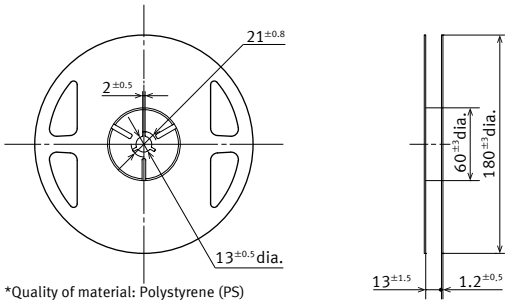 *Quality of material: Polystyrene (PS)
	(1) When picked from 1/2-pin side: Part No. AQY2C*R*PX, AQY2C*R*P1X (Shown above) (2) When picked from 3/4-pin side: Part No. AQY2C*R*PZ	
VSSOP 4-pin	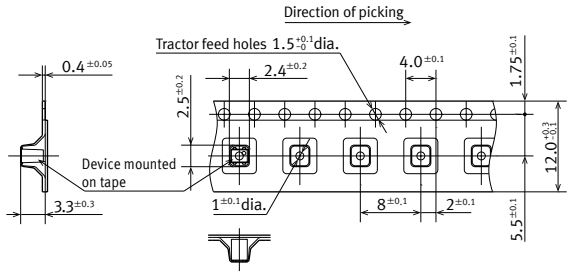	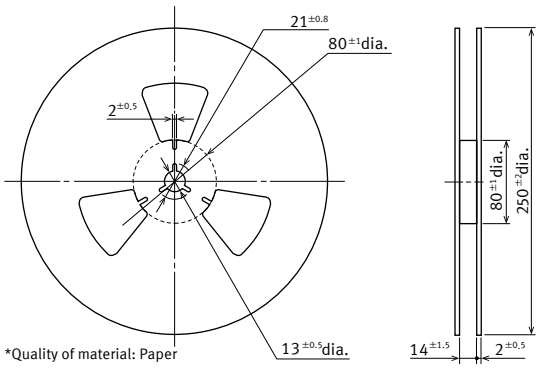 *Quality of material: Paper
	(1) When picked from 1 and 4-pin side: Part No. AQY*TY (Shown above) (2) When picked from 2 and 3-pin side: Part No. AQY*TW	
SON 4-pin	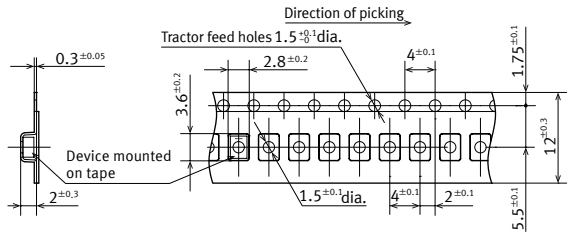	End of the part number Y/W 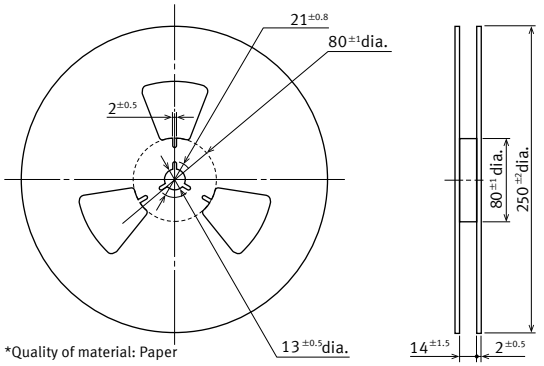 *Quality of material: Paper
	(1) When picked from 1 and 4-pin side: Part No. AQY*MY, AQY*M1Y (Shown above) (2) When picked from 2 and 3-pin side: Part No. AQY*MW	
SSOP 4-pin	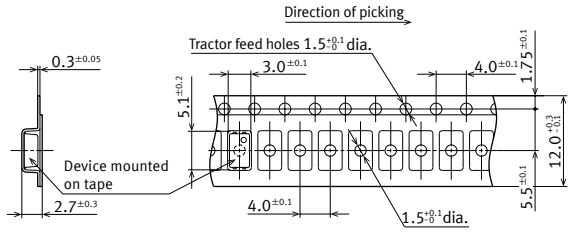	End of the part number 1Y 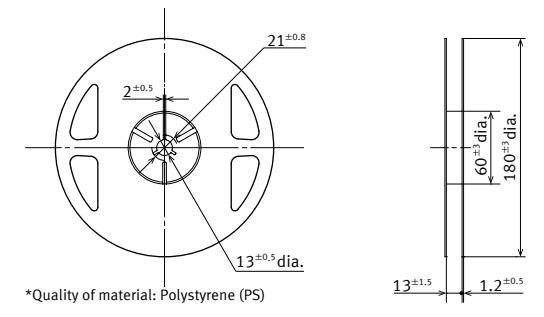 *Quality of material: Polystyrene (PS)
	(1) When picked from 1 and 4-pin side: Part No. AQY*VY, AQY221*V1Y, APV*111*VY, APV*111*V1Y (Shown above) (2) When picked from 2 and 3-pin side: Part No. AQY*VW, APV*111*VW	
SOP 4-pin	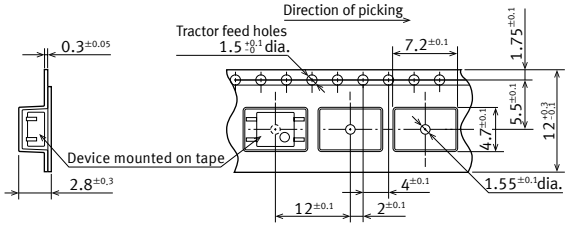	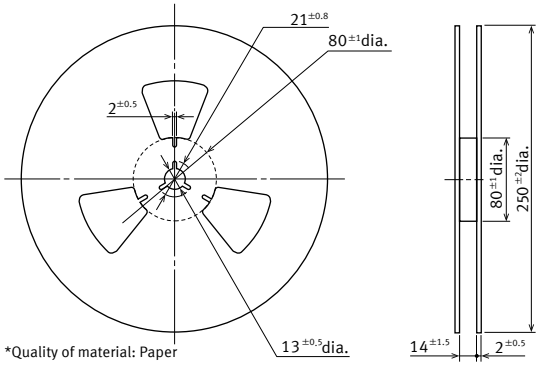 *Quality of material: Paper
	(1) When picked from 1/2-pin side: Part No. AQY*SX, APV**21SX (Shown above) (2) When picked from 3/4-pin side: Part No. AQY*SZ, APV**21SZ	

Note: " * " indicates characters of number or alphabet.

©Panasonic Industry Co., Ltd. 2022

	Tape dimensions	Dimensions of tape reel
SOP 6-pin	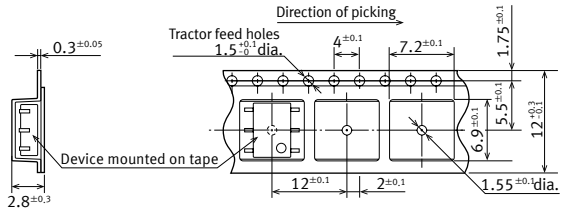 (1) When picked from 1/2/3-pin side: Part No. AQV*SX (Shown above) (2) When picked from 4/5/6-pin side: Part No. AQV*SZ	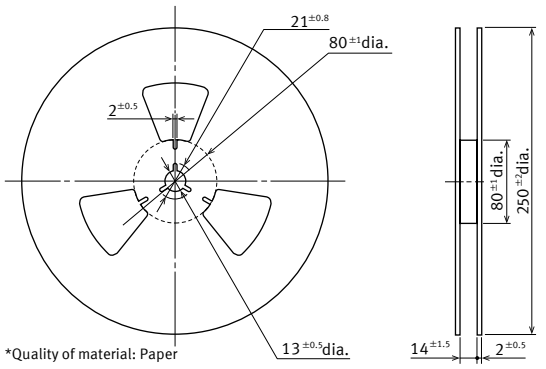
SOP 8-pin	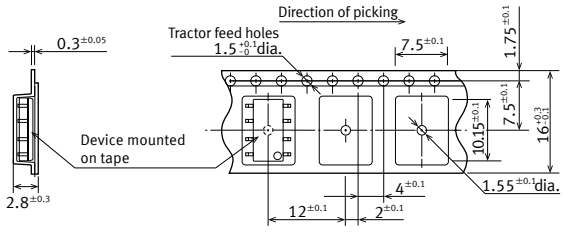 (1) When picked from 1/2/3/4-pin side: Part No. AQW*SX (Shown above) (2) When picked from 5/6/7/8-pin side: Part No. AQW*SZ	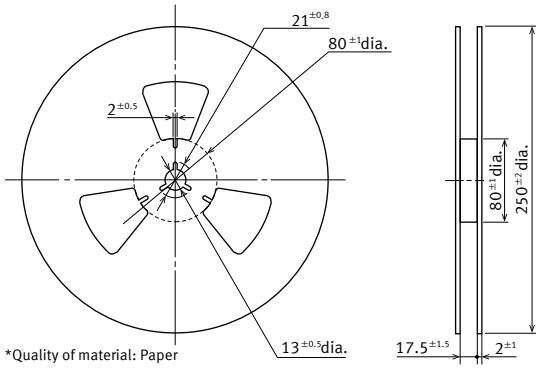
SOP 16-pin	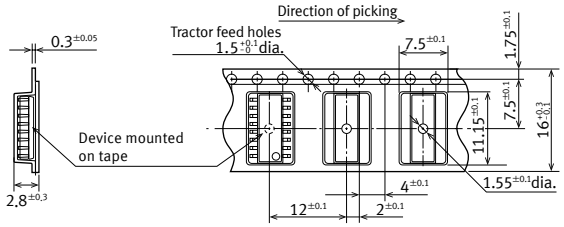 (1) When picked from 1/2/3/4/5/6/7/8-pin side: Part No. AQS*SX (Shown above) (2) When picked from 9/10/11/12/13/14/15/16-pin side: Part No. AQS*SZ	
DIP 4-pin Surface mount terminal	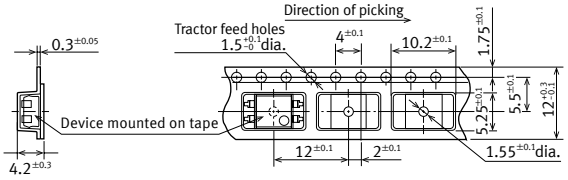 (1) When picked from 1/2-pin side: Part No. AQY*HAX, AQY210HLAX (Shown above) (2) When picked from 3/4-pin side: Part No. AQY*HAZ, AQY210HLAZ	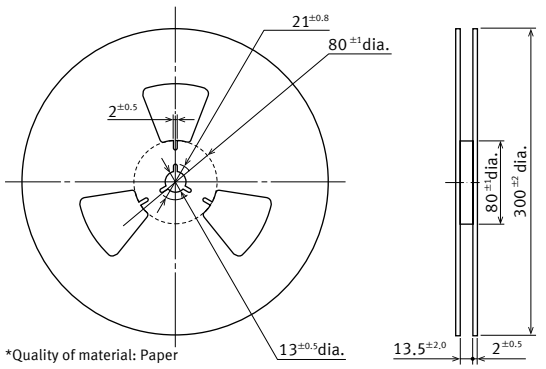
DIP 6-pin Surface mount terminal	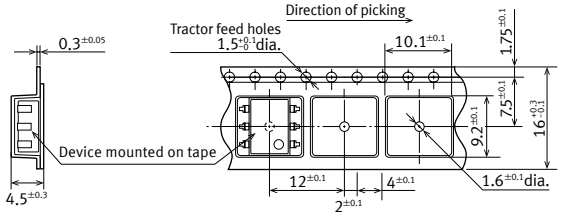 (1) When picked from 1/2/3-pin side: Part No. AQV*AX (Shown above) (2) When picked from 4/5/6-pin side: Part No. AQV*AZ	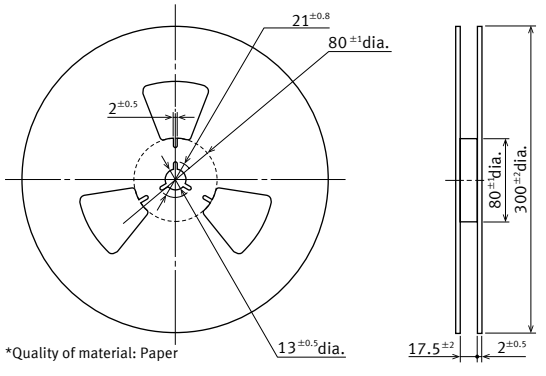

Note: " * " indicates characters of number or alphabet.

©Panasonic Industry Co., Ltd. 2022

	Tape dimensions	Dimensions of tape reel
DIP 8-pin Surface mount terminal	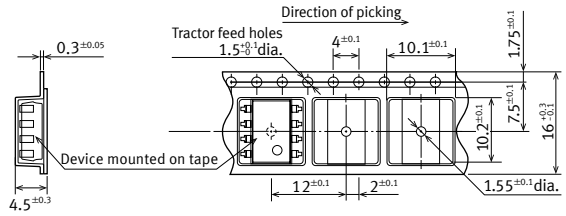 (1) When picked from 1/2/3/4-pin side: Part No. AQW*AX (Shown above) (2) When picked from 5/6/7/8-pin side: Part No. AQW*AZ	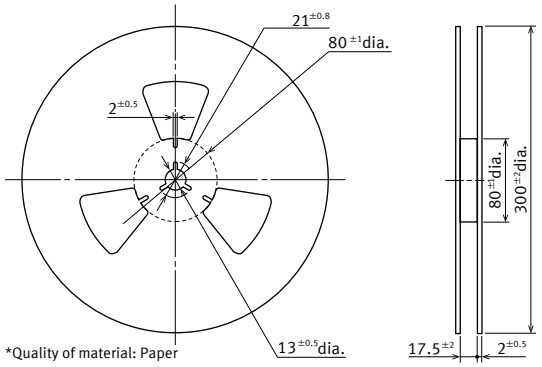
DIP 8-pin Surface mount terminal High I/O isolation voltage type	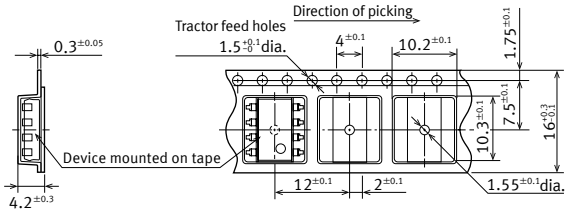 (1) When picked from 1/2/3/4-pin side: Part No. AQW*EHAX, AQW210HLAX (Shown above) (2) When picked from 5/6/7/8-pin side: Part No. AQW*EHAZ, AQW210HLAZ	
Power-DIP 4-pin SMD	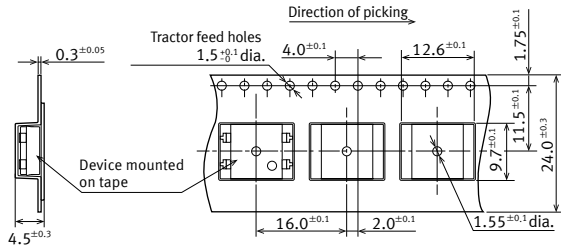 (1) When picked from 1/2-pin side: Part No. AQY*AX (Shown above) (2) When picked from 3/4-pin side: Part No. AQY*AZ	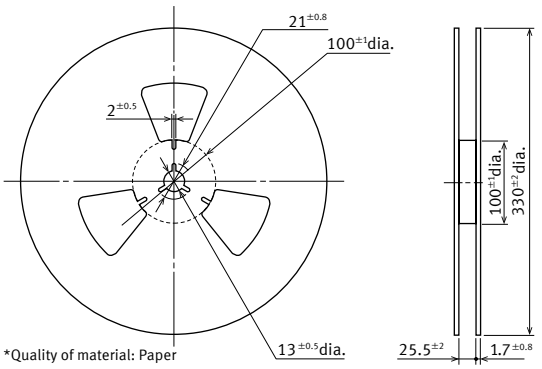
DIP 6-pin Surface mount terminal (Photovoltaic MOSFET driver)	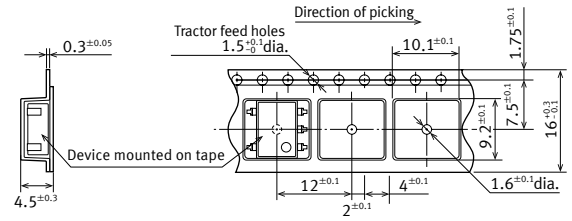 (1) When picked from 1/2/3-pin side: Part No. APV1122AX (Shown above) (2) When picked from 4/6-pin side: Part No. APV1122AZ	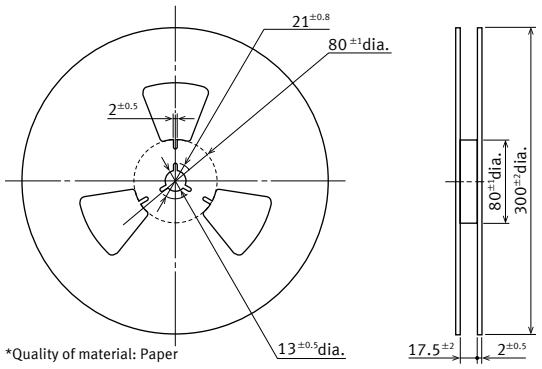

Note: " * " indicates characters of number or alphabet.

2) Tube

Devices are packaged in a tube so that 1-pin is on the stopper B side. Observe correct orientation when mounting them on PC boards.

(PD type)

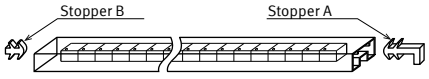

(DIP type)

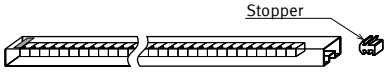

(SOP type)

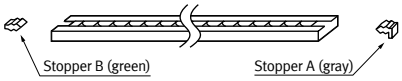

(Power type)

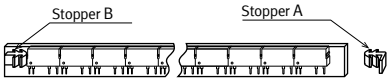

©Panasonic Industry Co., Ltd. 2022

■Current limit function (output current control)

1) Current limit function aims to increase resistance to surges when the switch is turned on. Before using this function, connect the varistor to the output as shown in the figure below.

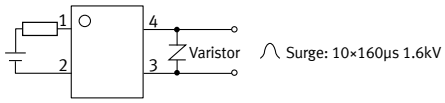

* Set the varistor voltage to 150 V or less.

2) The current limit function capability can be lost if used longer than the specified time. Be sure to set the output loss to the Max. rate.

■Short circuit protection circuit

The short circuit protection circuit is designed to protect circuits from excess current. Therefore, surge current may be detected as current overload in which case the output current will be cut and the off state maintained. For this reason, please include the inrush current in the load current and keep it below the maximum load current. Also, in order to maintain stability of internal IC operation, maintain an input current of at least 5 mA (Latch type), 10 mA (Non Latch type).

■Photovoltaic MOSFET driver cautions for use

When two external MOSFETs are connected with a common source terminal, oscillation may occur when operation is restored. Therefore, please insert a 100 to 1,000 Ω resistor between the gate terminal of the first MOSFET and the gate terminal of the second MOSFET.

A typical example of this is given in the circuit below.

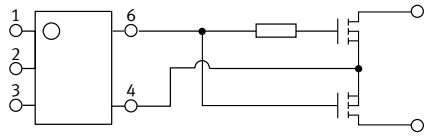

■Input LED current (For High Capacity type: with part number G)

When making PhotoMOS turn on and turn off, please make sure that the LED forward current increases and decreases instantly.

■Input voltage (for Power voltage-sensitive type)

For rising and dropping ratio of input voltage (dv/dt), maintain Min. 100 mV/s.

■Adjacent mounting (for Power type)

1) When devices are mounted close together with the heat-generated devices, ambient temperature may rise abnormally. Mounting layout and ventilation should be considered.

2) When many devices are mounted close together, load current should be reduced. (Refer to the data of “Load current in adjacent mounting vs. Ambient temperature characteristics.”)

■Recommended load voltage

As a guide in selecting PhotoMOS®, please refer to the following table.

1) Power photoMOS® (1 Form A)

		Absolute maximum rating		Recommended load voltage
		Load voltage	Load current	
DC type	AQZ102	60 V DC	4.0 A DC	5, 12, 24 V DC
	AQZ105	100 V DC	2.6 A DC	48 V DC
	AQZ107	200 V DC	1.3 A DC	100 V DC
	AQZ104	400 V DC	0.7 A DC	200 V DC
AC/ DC type	AQZ202	Peak AC, DC 60 V	Peak AC, DC 3.0 A	12 V AC 5, 12, 24 V DC
	AQZ205	Peak AC, DC 100 V	Peak AC, DC 2.0 A	24 V AC 48 V DC
	AQZ207	Peak AC, DC 200 V	Peak AC, DC 1.0 A	48 V AC 100 V DC
	AQZ204	Peak AC, DC 400 V	Peak AC, DC 0.5 A	120 V AC 200 V DC

2) Power photoMOS® (1 Form B)

		Absolute maximum rating		Recommended load voltage
		Load voltage	Load current	
AC/ DC type	AQZ404	Peak AC, DC 400 V	Peak AC, DC 0.5 A	100 V AC 200 V DC

3) Power photoMOS® Voltage-sensitive type (1 Form A)

		Absolute maximum rating		Recommended load voltage
		Load voltage	Load current	
DC type	AQZ102D	60 V DC	3.6 A DC	5, 12, 24 V DC
	AQZ105D	100 V DC	2.3 A DC	48 V DC
	AQZ107D	200 V DC	1.1 A DC	100 V DC
	AQZ104D	400 V DC	0.6 A DC	200 V DC
AC/ DC type	AQZ202D	Peak AC, DC 60 V	Peak AC, DC 2.7 A	12 V AC 5, 12, 24 V DC
	AQZ205D	Peak AC, DC 100 V	Peak AC, DC 1.8 A	24 V AC 48 V DC
	AQZ207D	Peak AC, DC 200 V	Peak AC, DC 0.9 A	48 V AC 100 V DC
	AQZ204D	Peak AC, DC 400 V	Peak AC, DC 0.45 A	120 V AC 200 V DC

4) Power photoMOS® High Capacity type (1 Form A)

		Absolute maximum rating		Recommended load voltage
		Load voltage	Load current	
DC type	AQZ192	60 V DC	10 A DC	5, 12, 24 V DC
	AQZ197	200 V DC	5 A DC	100 V DC
AC/ DC type	AQZ202G	Peak AC, DC 60 V	Peak AC, DC 6 A	12 V AC 5, 12, 24 V DC
	AQZ205G	Peak AC, DC 100 V	Peak AC, DC 4 A	24 V AC 48 V DC
	AQZ207G	Peak AC, DC 200 V	Peak AC, DC 2 A	48 V AC 100 V DC
	AQZ206G2	Peak AC, DC 600 V	Peak AC, DC 1 A	120, 240 V AC 200, 400 V DC

©Panasonic Industry Co., Ltd. 2022

Panasonic
INDUSTRY

Panasonic Industry Co., Ltd.
Electromechanical Control Business Division
■1006, Oaza Kadoma, Kadoma-shi, Osaka 571-8506, Japan
industral.panasonic.com/ac/e/

©Panasonic Industry Co., Ltd. 2022

Specifications are subject to change without notice.
ASCTB109E 202205
2022.5