Poly-carbonmonofluoride Lithium Batteries (BR series)

TAB CONFIGURATIONS

Bare Cell Model No.	Tab Type	Description	Configuration Diagram No.	Nominal	
				Voltage (V)	Capacity (mAh)
BR-2/3A	BR-2/3AT2SP	12 mm tabs for adding lead wires	1	3	1200
BR-2/3AG	BR-2/3AGT2SP*				1450
BR-2/3A	BR-2/3AE5SP	Tabs for PCB mounting. 1 Pin Positive 1 Pin Negative	2	3	1200
BR-2/3AG	BR-2/3AGE5SP*				1450
BR-2/3A	BR-2/3AE2SP	Tabs for PCB mounting. 2 Pins Positive 1 Pin Negative	3	3	1200
BR-2/3AG	BR-2/3AGE2SP*				1450
BR-1/2AA	BR-1/2AAE5P	Tabs for PCB mounting. 1 Pin Positive 1 Pin Negative	4	3	1000
BR-1/2AA	BR-1/2AAE2P	Tabs for PCB mounting. 2 Pins Positive 1 Pin Negative	5	3	1000
BR-A	BR-AT2P	12 mm tabs for adding lead wires	6	3	1800
BR-AG	BR-AGT2P*				2200
BR-A	BR-AE2P	Tabs for PCB mounting. 1 Pin Positive 1 Pin Negative	7	3	1800
BR-AG	BR-AGE2P*				2200
BR-C	BR-CT2P	12 mm tabs for adding lead wires	8	3	5000

* Please contact Panasonic for availability on optional items. Optional items may be subject to minimum order quantities.

lly descriptive only and is not intended to make or imply any representation, guarantee or warranty with respect to any cells and batteries. Cell and battery designs/
act Panasonic for the latest information

BR Series Cylindrical Cell Tab Configurations

DIMENSIONS / MM

Dimensions/mm

①

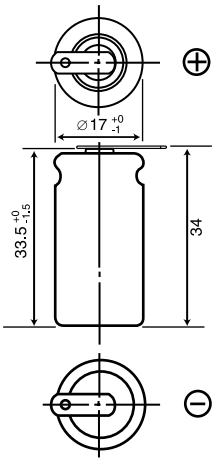

BR-2/3AT2SP
BR-2/3AGT2SP*

②

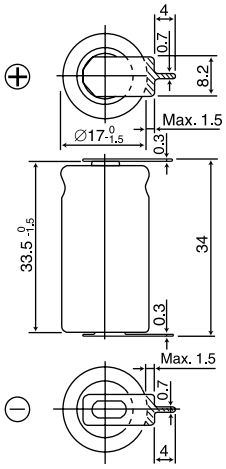

BR-2/3AE5SP
BR-2/3AGE5SP*

③

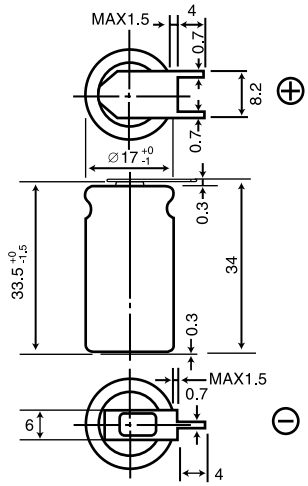

BR-2/3AE2SP
BR-2/3AGE2SP*

④

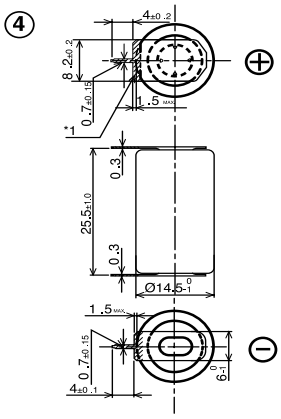

BR-1/2AAE5P

⑤

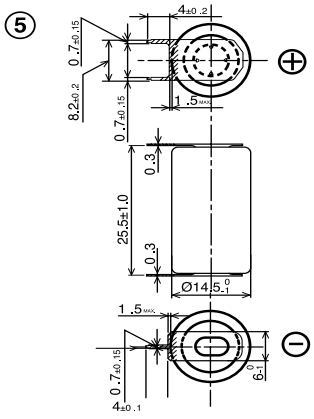

BR-1/2AAE2P

⑥

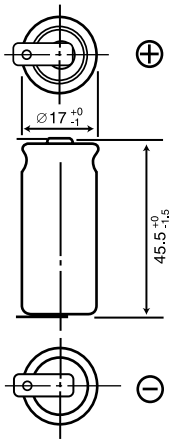

BR-AT2P
BR-2/3AGT2P*

⑦

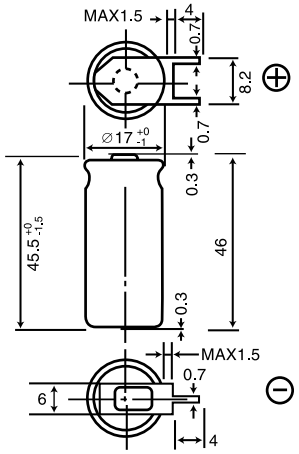

BR-AE2P
BR-AGE2P*

⑧

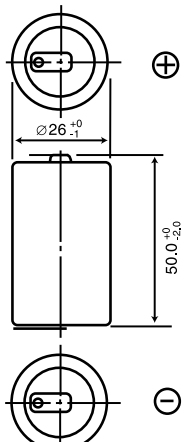

BR-CT2P

* Please contact Panasonic for availability on optional items. Optional items may be subject to minimum order quantities.

lly descriptive only and is not intended to make or imply any representation, guarantee or warranty with respect to any cells and batteries. Cell and battery designs/
act Panasonic for the latest information