Panasonic
INDUSTRY

Power Relays (Over 2 A)

DS POWER RELAYS

Product Catalog

IN Your Future

2023.5

DS POWER RELAYS

1 Form A 8 A (AC) / 5 A (DC), 1 Form A 1 Form B/2 Form A 5 A (AC/DC), Small polarized power relays

Protective construction：Sealed type

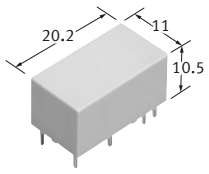

(Unit：mm)

FEATURES

- Compact size: width (11 mm) × length (20.2 mm) × height (10.5 mm)
- Variety of contact arrangements (1 Form A, 1 Form A 1 Form B, 2 Form A)
- Surge withstand voltage: 5,000 V
- Latching types available
- PC board sockets are available

TYPICAL APPLICATIONS

- Electric power equipment
- Measuring instruments
- Industrial machines
- OA equipment

ORDERING INFORMATION (PART NO. : Ordering part number for Japanese market)

AGP 2 □ □ □ □

- Operating function
  0：Standard type Single side stable
  1：Standard type 1 coil latching
  2：Standard type 2 coil latching
- Contact arrangement
  0：1 Form A
  1：1 Form A 1 Form B
  2：2 Form A
- Rated coil voltage (DC)

Part number	1	2	3	4	7	9
Rated coil voltage(V)	3	6	12	24	9	5

- Contact material
  • Au-flashed $AgSnO_2$ type
  F：1 Form A 1 Form B
  Nil：1 Form A, 2 Form A

Note) Reverse polarity types available

ORDERING INFORMATION (TYPE NO. : Ordering part number for non Japanese market)

DSP □-□-□-□-□

- Contact arrangement
  1a：1 Form A
  1：1 Form A 1 Form B
  2a：2 Form A
- Operating function
  Nil：Single side stable
  L：1 coil latching
  L2：2 coil latching
- Rated coil voltage (DC)
  3, 5, 6, 9, 12, 24 V
- Polarity
  Nil：Standard polarity
  R：Reverse polarity
- Contact material
  • Au-flashed $AgSnO_2$ type
  F：1 Form A 1 Form B
  Nil：1 Form A, 2 Form A

©Panasonic Industry Co., Ltd. 2023

TYPES

" Type No. " is ordering part number for non Japanese market. " Part No. " is ordering part number for Japanese market.

Contact arrangement	Rated coil voltage	Single side stable		1 coil latching		2 coil latching		Standard packing	
		Type No.	Part No.	Type No.	Part No.	Type No.	Part No.	Inner carton	Outer carton
1 Form A	3 V DC	DSP1a-DC3V	AGP2001	DSP1a-L-DC3V	AGP2101	DSP1a-L2-DC3V	AGP2201	50 pcs.	500 pcs.
	5 V DC	DSP1a-DC5V	AGP2009	DSP1a-L-DC5V	AGP2109	DSP1a-L2-DC5V	AGP2209		
	6 V DC	DSP1a-DC6V	AGP2002	DSP1a-L-DC6V	AGP2102	DSP1a-L2-DC6V	AGP2202		
	9 V DC	DSP1a-DC9V	AGP2007	DSP1a-L-DC9V	AGP2107	DSP1a-L2-DC9V	AGP2207		
	12 V DC	DSP1a-DC12V	AGP2003	DSP1a-L-DC12V	AGP2103	DSP1a-L2-DC12V	AGP2203		
	24 V DC	DSP1a-DC24V	AGP2004	DSP1a-L-DC24V	AGP2104	DSP1a-L2-DC24V	AGP2204		
1 Form A 1 Form B	3 V DC	DSP1-DC3V-F	AGP2011F	DSP1-L-DC3V-F	AGP2111F	DSP1-L2-DC3V-F	AGP2211F		
	5 V DC	DSP1-DC5V-F	AGP2019F	DSP1-L-DC5V-F	AGP2119F	DSP1-L2-DC5V-F	AGP2219F		
	6 V DC	DSP1-DC6V-F	AGP2012F	DSP1-L-DC6V-F	AGP2112F	DSP1-L2-DC6V-F	AGP2212F		
	9 V DC	DSP1-DC9V-F	AGP2017F	DSP1-L-DC9V-F	AGP2117F	DSP1-L2-DC9V-F	AGP2217F		
	12 V DC	DSP1-DC12V-F	AGP2013F	DSP1-L-DC12V-F	AGP2113F	DSP1-L2-DC12V-F	AGP2213F		
	24 V DC	DSP1-DC24V-F	AGP2014F	DSP1-L-DC24V-F	AGP2114F	DSP1-L2-DC24V-F	AGP2214F		
2 Form A	3 V DC	DSP2a-DC3V	AGP2021	DSP2a-L-DC3V	AGP2121	DSP2a-L2-DC3V	AGP2221		
	5 V DC	DSP2a-DC5V	AGP2029	DSP2a-L-DC5V	AGP2129	DSP2a-L2-DC5V	AGP2229		
	6 V DC	DSP2a-DC6V	AGP2022	DSP2a-L-DC6V	AGP2122	DSP2a-L2-DC6V	AGP2222		
	9 V DC	DSP2a-DC9V	AGP2027	DSP2a-L-DC9V	AGP2127	DSP2a-L2-DC9V	AGP2227		
	12 V DC	DSP2a-DC12V	AGP2023	DSP2a-L-DC12V	AGP2123	DSP2a-L2-DC12V	AGP2223		
	24 V DC	DSP2a-DC24V	AGP2024	DSP2a-L-DC24V	AGP2124	DSP2a-L2-DC24V	AGP2224		

Note) Reverse polarity type (AGP9****) are manufactured by lot upon receipt of order.

For the sockets, please refer to the " PC board sockets ".

RATING

■ Coil data

- Operating characteristics such as " Operate voltage " and " Release voltage " are influenced by mounting conditions or ambient temperature, etc.
  Therefore, please use the relay within ±5 % of rated coil voltage.
- " Initial " means the condition of products at the time of delivery.

● Single side stable

Rated coil voltage	Operate voltage* (at 20 ℃)	Release voltage* (at 20 ℃)	Rated operating current (±10 %, at 20 ℃)	Coil resistance (±10 %, at 20 ℃)	Rated operating power	Max. allowable voltage (at 20 ℃)
3 V DC	Max. 80 % V of rated coil voltage (Initial)	Min. 10 % V of rated coil voltage (Initial)	100 mA	30 Ω	300 mW	130 % V of rated coil voltage
5 V DC			60.2 mA	83 Ω		
6 V DC			50 mA	120 Ω		
9 V DC			33.3 mA	270 Ω		
12 V DC			25 mA	480 Ω		
24 V DC			12.5 mA	1,920 Ω		

* Square, pulse drive

● 1 coil latching

Rated coil voltage	Set voltage* (at 20 ℃)	Reset voltage* (at 20 ℃)	Rated operating current (±10 %, at 20 ℃)	Coil resistance (±10 %, at 20 ℃)	Rated operating power	Max. allowable voltage (at 20 ℃)
3 V DC	Max. 80 % V of rated coil voltage (Initial)	Max. 80 % V of rated coil voltage (Initial)	50 mA	60 Ω	150 mW	130 % V of rated coil voltage
5 V DC			30.1 mA	166 Ω		
6 V DC			25 mA	240 Ω		
9 V DC			16.7 mA	540 Ω		
12 V DC			12.5 mA	960 Ω		
24 V DC			6.3 mA	3,840 Ω		

* Square, pulse drive

©Panasonic Industry Co., Ltd. 2023

● 2 coil latching

Rated coil voltage	Set voltage* (at 20 ℃)	Reset voltage* (at 20 ℃)	Rated operating current (±10 %, at 20 ℃)		Coil resistance (±10 %, at 20 ℃)		Rated operating power		Max. allowable voltage (at 20 ℃)
			Set coil	Reset coil	Set coil	Reset coil	Set coil	Reset coil	
3 V DC	Max. 80 % V of rated coil voltage (Initial)	Max. 80 % V of rated coil voltage (Initial)	100 mA	100 mA	30 Ω	30 Ω	300 mW	300 mW	130 % V of rated coil voltage
5 V DC			60.2 mA	60.2 mA	83 Ω	83 Ω			
6 V DC			50 mA	50 mA	120 Ω	120 Ω			
9 V DC			33.3 mA	33.3 mA	270 Ω	270 Ω			
12 V DC			25 mA	25 mA	480 Ω	480 Ω			
24 V DC			12.5 mA	12.5 mA	1,920 Ω	1,920 Ω			

* Square, pulse drive

■ Specifications

Item		Specifications		
Contact data	Contact arrangement	1 Form A	1 Form A 1 Form B	2 Form A
	Contact resistance (initial)	Max. 30 mΩ (by voltage drop 6 V DC 1 A)		
	Contact material	Au-flashed $AgSnO_2$ type		
	Contact rating (resistive)	8 A 250 V AC, 5 A 30 V DC	5 A 250 V AC, 5 A 30 V DC	
	Max. switching power (resistive)	2,000 VA, 150 W	1,250 VA, 150 W	
	Max. switching voltage	250 V AC, 125 V DC (0.2A)		
	Max. switching current	8 A (AC) , 5 A (DC)	5 A (AC, DC)	
	Min. switching load (reference value) *1	10 mA 5 V DC		
Insulation resistance (initial)		Min. 1,000 MΩ (at 500 V DC, Measured portion is the same as the case of dielectric strength.)		
Dielectric strength (initial)	Between open contacts	1,000 V rms for 1 min (detection current: 10 mA)		
	Between contact sets	–	2,000 V rms for 1 min (detection current: 10 mA)	
	Between contact and coil	3,000 V rms for 1 min (detection current: 10 mA)		
Surge withstand voltage (initial) *2	Between contact and coil	5,000 V		
Time characteristics (initial)	Operate (Set) time	Max. 10 ms (Max. 10 ms) at rated coil voltage (at 20 ℃, without bounce)		
	Release (Reset) time	Max. 5 ms (Max. 10 ms) at rated coil voltage (at 20 ℃, without bounce, without diode)		
Shock resistance	Functional	196 m/s^2 (half-sine shock pulse: 11 ms, detection time: 10 μs)		
	Destructive	980 m/s^2 (half-sine shock pulse: 6 ms)		
Vibration resistance	Functional	10 to 55 Hz (at double amplitude of 2 mm, detection time: 10 μs)		
	Destructive	10 to 55 Hz (at double amplitude of 3.5 mm)		
Expected life	Mechanical life	Min. 50 × 10^6 ope. (switching frequency: at 180 times/min)		
Conditions	Conditions for usage, transport and storage*3	Ambient temperature: −40 to +60 ℃ Humidity: 5 to 85 % RH (Avoid icing and condensation)	Ambient temperature: −40 to +65 ℃ Humidity: 5 to 85 % RH (Avoid icing and condensation)	Ambient temperature: −40 to +60 ℃ Humidity: 5 to 85 % RH (Avoid icing and condensation)
Unit weight		Approx. 4.5 g		

*1: This value can change due to the switching frequency, environmental conditions, and desired reliability level, therefore it is recommended to check this with the actual load.
*2: Wave is standard shock voltage of ±1.2 × 50 μs according to JEC-212-1981
*3: For ambient temperature, please read " GUIDELINES FOR RELAY USAGE ".

■ Expected electrical life

Conditions: Resistive load, switching frequency at 20 times/min

Type	Switching capacity	Number of operations
1 Form A	8 A 250 V AC	Min. 100 × 10^3 ope.
	5 A 30 V DC	Min. 100 × 10^3 ope.
1 Form A 1 Form B	5 A 250 V AC	Min. 100 × 10^3 ope.
	5 A 30 V DC	Min. 100 × 10^3 ope.
2 Form A	5 A 250 V AC	Min. 100 × 10^3 ope.
	5 A 30 V DC	Min. 100 × 10^3 ope.

©Panasonic Industry Co., Ltd. 2023

REFERENCE DATA

1. Max. switching capacity

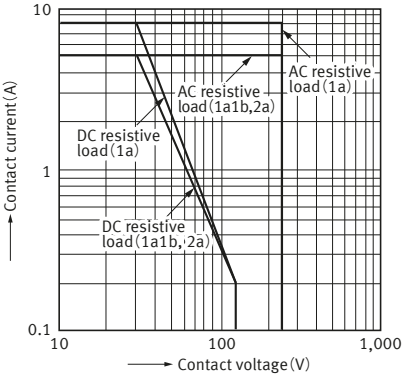

2-1. Switching life curve
(1 Form A 1 Form B)

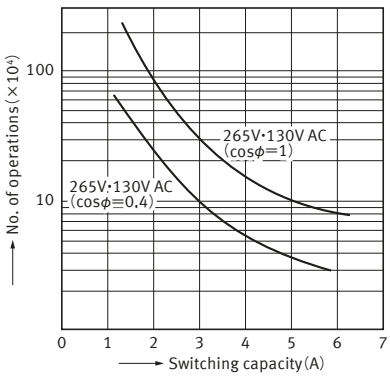

2-2. Switching life curve
(1 Form A 1 Form B)

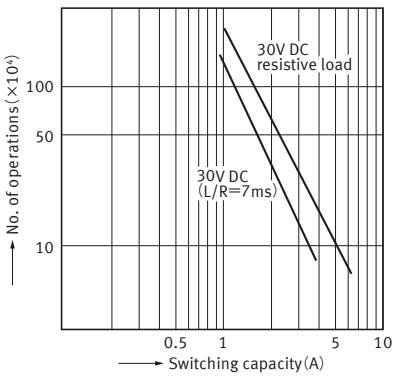

3-1. Coil temperature characteristics
(1 Form A: Average)

Tested sample : DSP1a-12V DC, 5 pcs.

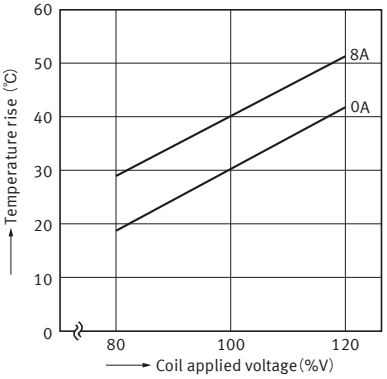

3-2. Coil temperature characteristics
(1 Form A 1 Form B: Average)

Tested sample : DSP1-12V DC, 5 pcs.

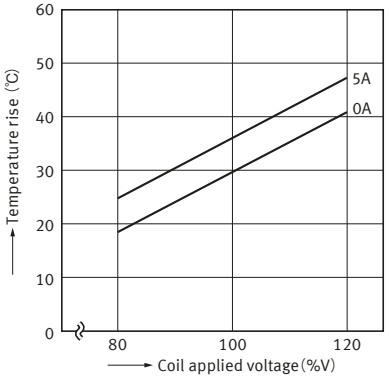

3-3. Coil temperature characteristics
(2 Form A: Average)

Tested sample : DSP2a-12V DC, 5 pcs.

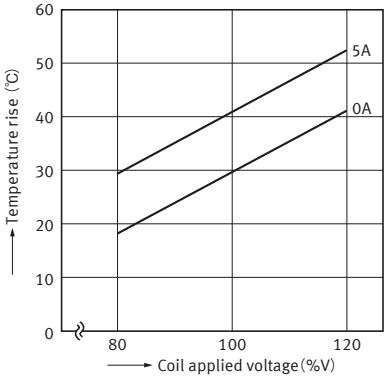

4-1. Ambient temperature characteristics
(1 Form A: Average)

Tested sample : DSP1a-12V DC, 5 pcs.

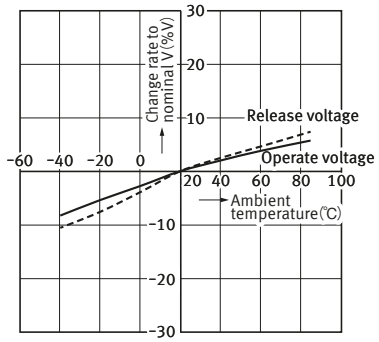

4-2. Ambient temperature characteristics
(1 Form A 1 Form B: Average)

Tested sample : DSP1-12V DC, 5 pcs.

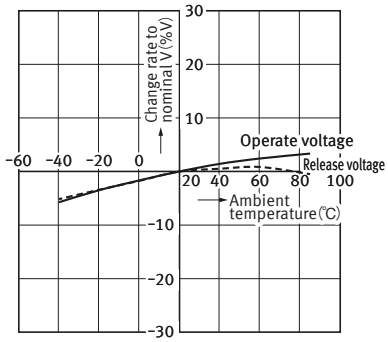

4-3. Ambient temperature characteristics
(2 Form A: Average)

Tested sample : DSP2a-12V DC, 5 pcs.

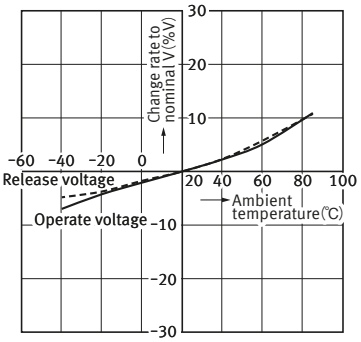

©Panasonic Industry Co., Ltd. 2023

5-1. Operate and release time
(without diode: 1 Form A)

Tested sample：DSP1a-12V DC, 5 pcs.

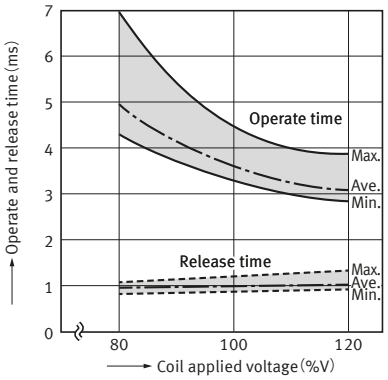

5-2. Operate and release time
(without diode: 1 Form A 1 Form B)

Tested sample：DSP1-12V DC, 5 pcs.

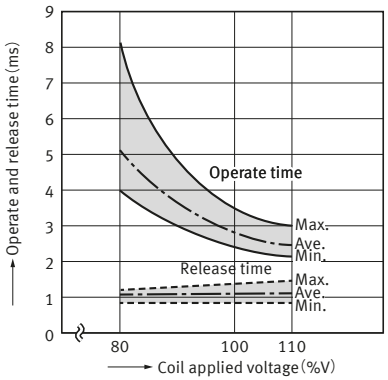

5-3. Operate and release time
(without diode: 2 Form A)

Tested sample：DSP2a-12V DC, 5 pcs.

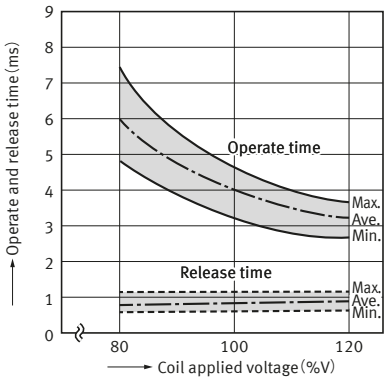

5-4. Operate and release time
(with diode: 1 Form A)

Tested sample：DSP1a-12V DC, 5 pcs.

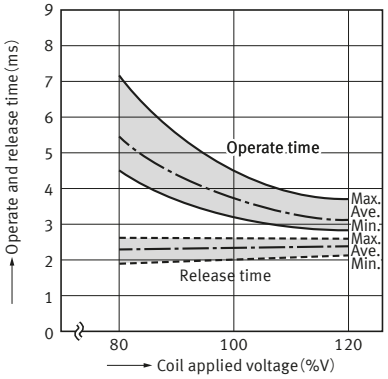

5-5. Operate and release time
(with diode: 1 Form A 1 Form B)

Tested sample：DSP1-12V DC, 5 pcs.

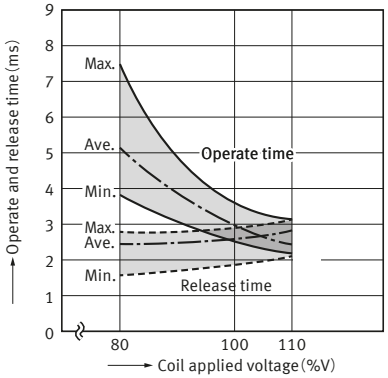

5-6. Operate and release time
(with diode: 2 Form A)

Tested sample：DSP2a-12V DC, 5 pcs.

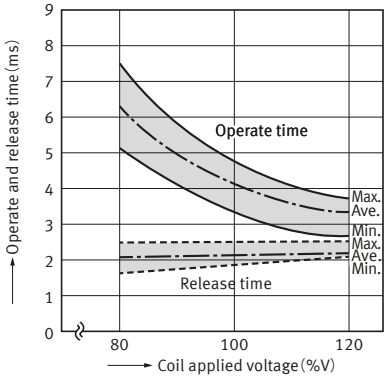

6-1. Influence of proximity mounting
(1 Form A)

Tested sample：DSP1a-12V DC, 5 pcs.

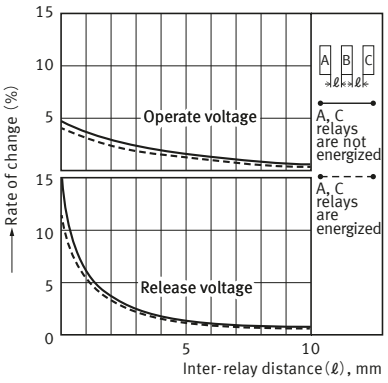

6-2. Influence of proximity mounting
(1 Form A 1 Form B)

Tested sample：DSP1-12V DC, 5 pcs.

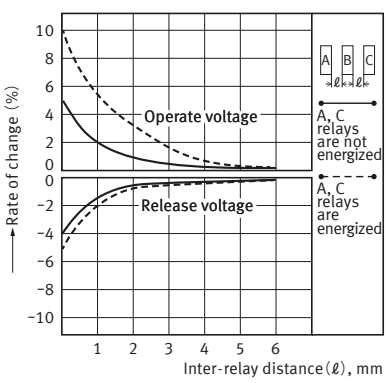

6-3. Influence of proximity mounting
(2 Form A)

Tested sample：DSP2a-12V DC, 5 pcs.

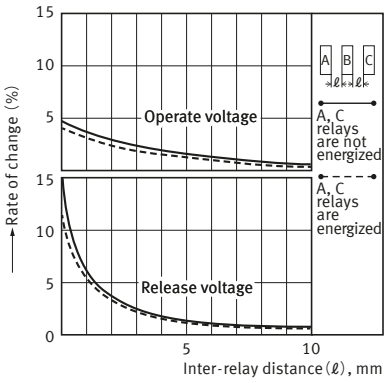

©Panasonic Industry Co., Ltd. 2023

DIMENSIONS (Unit: mm)

CAD The CAD data of the products with a " CAD " mark can be downloaded from our Website.

■ 1 Form A

● Single side stable

CAD

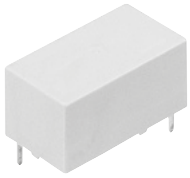

External dimensions

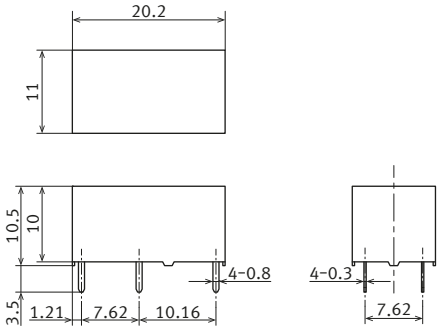

General tolerance ±0.3

Recommended PC board pattern (BOTTOM VIEW)

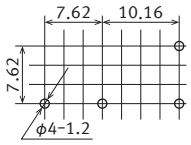

Tolerance ±0.1

Schematic (BOTTOM VIEW) (De-energize)

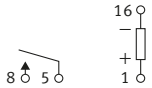

● 1 coil latching

CAD

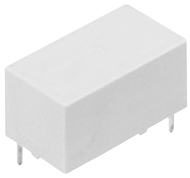

External dimensions

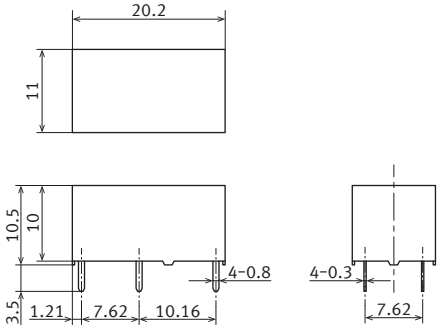

General tolerance ±0.3

Recommended PC board pattern (BOTTOM VIEW)

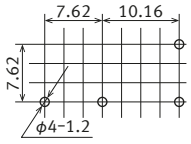

Tolerance ±0.1

Schematic (BOTTOM VIEW) (Reset)

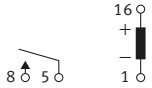

● 2 coil latching

CAD

External dimensions

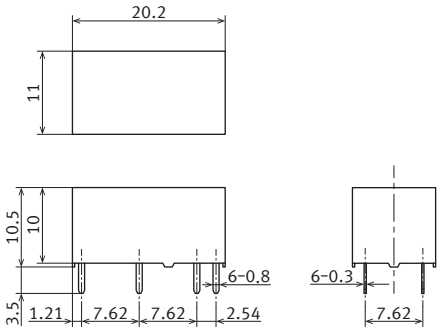

General tolerance ±0.3

Recommended PC board pattern (BOTTOM VIEW)

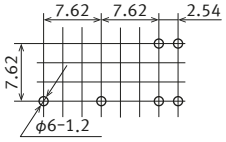

Tolerance ±0.1

Schematic (BOTTOM VIEW) (Reset)

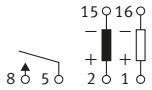

©Panasonic Industry Co., Ltd. 2023

■ 1 Form A 1 Form B

● Single side stable

CAD



External dimensions

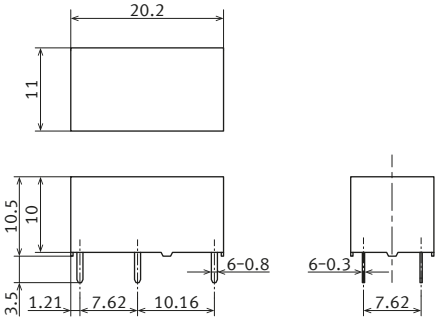

General tolerance ±0.3

Recommended PC board pattern (BOTTOM VIEW)

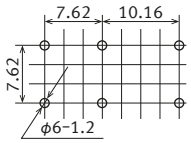

Tolerance ±0.1

Schematic (BOTTOM VIEW) (De-energize)

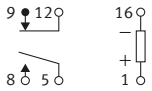

● 1 coil latching

CAD



External dimensions

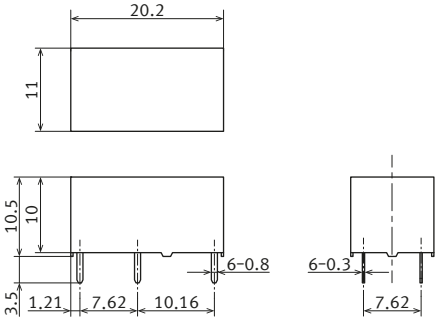

General tolerance ±0.3

Recommended PC board pattern (BOTTOM VIEW)

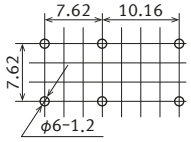

Tolerance ±0.1

Schematic (BOTTOM VIEW) (Reset)

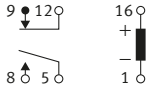

● 2 coil latching

CAD

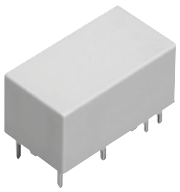

External dimensions

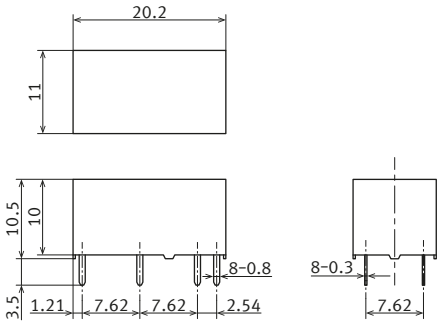

General tolerance ±0.3

Recommended PC board pattern (BOTTOM VIEW)

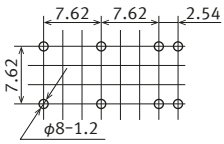

Tolerance ±0.1

Schematic (BOTTOM VIEW) (Reset)

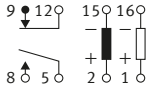

©Panasonic Industry Co., Ltd. 2023

■ 2 Form A

● Single side stable

CAD



External dimensions

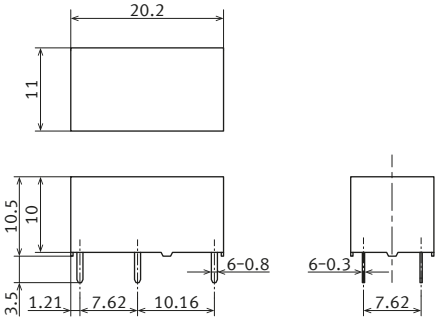

General tolerance ±0.3

Recommended PC board pattern (BOTTOM VIEW)

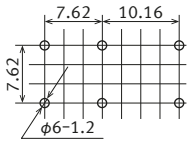

Tolerance ±0.1

Schematic (BOTTOM VIEW) (De-energize)

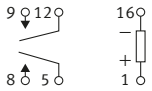

● 1 coil latching

CAD



External dimensions

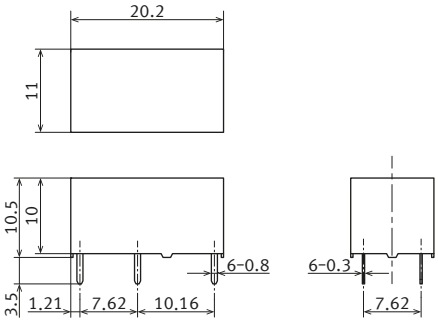

General tolerance ±0.3

Recommended PC board pattern (BOTTOM VIEW)

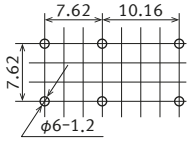

Tolerance ±0.1

Schematic (BOTTOM VIEW) (Reset)

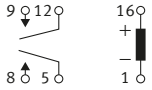

● 2 coil latching

CAD

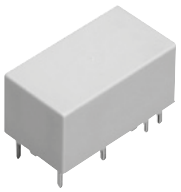

External dimensions

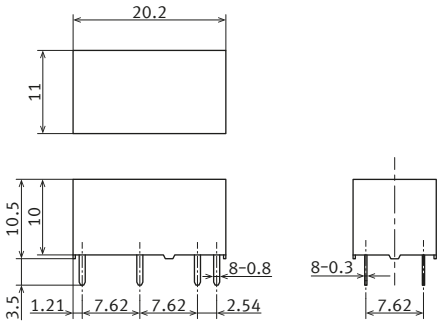

General tolerance ±0.3

Recommended PC board pattern (BOTTOM VIEW)

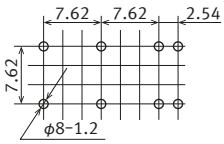

Tolerance ±0.1

Schematic (BOTTOM VIEW) (Reset)

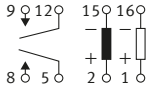

©Panasonic Industry Co., Ltd. 2023

SAFETY STANDARDS

Each standard may be updated at any time, so please check our Website for the latest information.

■ UL/C-UL (Approved)

1 Form A

File No.	Contact rating
E43028	8 A 125, 250 V AC
	5 A 30 V DC R
	1/6 HP 125, 250 V AC
	B300

1 Form A 1 Form B

File No.	Contact rating
E43028	5 A 125, 250 V AC
	5 A 30 V DC R
	1/6 HP 125, 250 V AC
	30 W Max.: 1 A 30 V DC - 0.24 A 125 V DC

2 Form A

File No.	Contact rating
E43028	5 A 125, 250 V AC
	5 A 30 V DC R
	1/10 HP 125, 250 V AC

■ VDE (Approved)

1 Form A

File No.	Contact rating
40056114	8 A 250 V AC (cosϕ = 1.0)
	5 A 250 V AC (cosϕ = 0.4)
	5 A 30 V DC (0 ms)

1 Form A 1 Form B

File No.	Contact rating
40056114	5 A 250 V AC (cosϕ = 1.0)
	5 A 30 V DC (0 ms)
	3 A 250 V AC (cosϕ = 0.4)

2 Form A

File No.	Contact rating
40056114	5 A 250 V AC (cosϕ = 1.0)
	5 A 30 V DC (0 ms)
	3 A 250 V AC (cosϕ = 0.4)

■ CSA (Approved)

CSA standard approved by C-UL

GUIDELINES FOR USAGE

■ For cautions for use, please read " GUIDELINES FOR RELAY USAGE ".
https://industrial.panasonic.com/ac/e/control/relay/cautions_use/index.jsp

■ Cautions for usage of DS power relays

- Measurement of operate (set) and release (reset) voltages is done with terminals facing down.
- Please be careful when using this relay (1 Form A 1 Form B) , because when it operates and releases, the N.O. and N.C. turn ON simultaneously, which can cause harm to the circuit.

● Set and reset pulse time

Regarding the set and reset pulse time of the latching type, for the purpose of reliable operation under ambient temperature fluctuations and different operating conditions, we recommend setting the coil applied set and reset pulse time to 25 ms or more at the rated coil voltage.

©Panasonic Industry Co., Ltd. 2023

PC board sockets

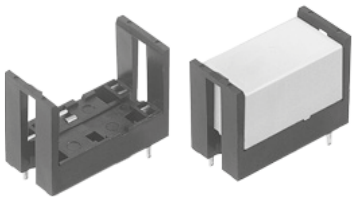

SELECTOR CHART

Relay type	Socket	1 Form A		1 Form A, 1 Form A 1 Form B, 2 Form A	
		Single side stable, 1 coil latching	2 coil latching	Single side stable, 1 coil latching	2 coil latching
1 Form A	Single side stable	●	●	●	●
	1 coil latching	●	–	●	–
	2 coil latching	–	●	–	●
1 Form A 1 Form B	Single side stable	–	–	●	●
	1 coil latching	–	–	●	–
	2 coil latching	–	–	–	●
2 Form A	Single side stable	–	–	●	●
	1 coil latching	–	–	●	–
	2 coil latching	–	–	–	●

TYPES

Product name	Single side stable, 1 coil latching		2 coil latching		Standard packing	
	Type No.	Part No.	Type No.	Part No.	Inner carton	Outer carton
1 Form A	DSP1a-PS	AGP2800	DSP1a-PSL2	AGP2802	50 pcs.	500 pcs.
1 Form A, 1 Form A 1 Form B, 2 Form A	DSP2a-PS	AGP2820	DSP2a-PSL2	AGP2822		

RATING

Item	Specifications
Dielectric strength (initial)	Each between terminal: 3,000 V rms for 1 min (detection current: 10 mA) (Except for the portion between coil terminals, DSP1a-PSL2 and DSP2a-PSL2 applicable)
Insulation resistance (initial)	Each between terminal: Min. 1,000 MΩ (at 500 V DC, Measured portion is the same as the case of dielectric strength.)
Maximum carrying current	8 A (DSP1a-PS, DSP1a-PSL2) 5 A (DSP2a-PS, DSP2a-PSL2)
Conditions for usage, transport and storage	Ambient temperature: −40 to +65 ℃ Humidity: 5 to 85 % RH (Avoid icing and condensation)

©Panasonic Industry Co., Ltd. 2023

DIMENSIONS (Unit: mm)

CAD The CAD data of the products with a " CAD " mark can be downloaded from our Website.

CAD

External dimensions

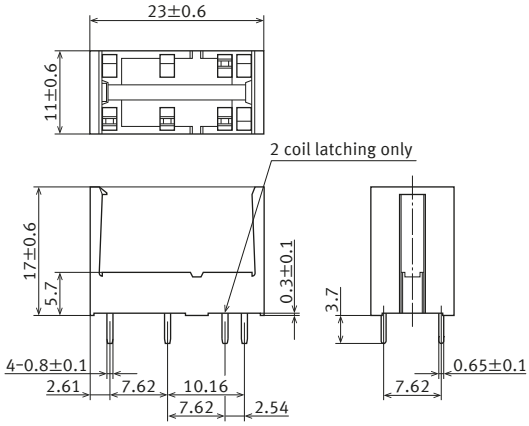

General tolerance ±0.3

Recommended PC board pattern (BOTTOM VIEW)

1 Form A

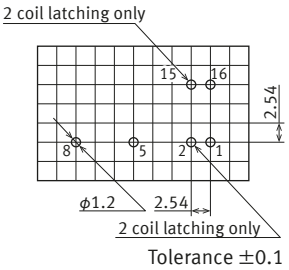

Tolerance ±0.1

Note) Terminal No.2 and 15 are for DSP1a-PSL2 only.

1 Form A, 1 Form A 1 Form B, 2 Form A

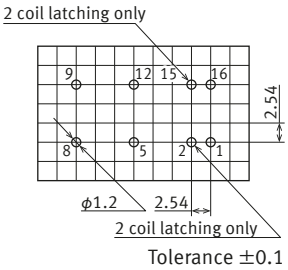

Tolerance ±0.1

Note) Terminal No.2 and 15 are for DSP2a-PSL2 only.

HANDLING

■ Mounting method of relay

1) Match the direction of relay and socket.

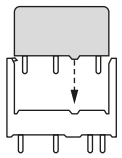

2) Both ends of relays are fixed so tightly that the socket hooks on the top surface of relays.

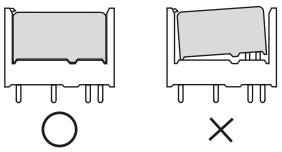

■ Removing method of relay

1) Remove the relay, applying force in the direction as shown in the figure.

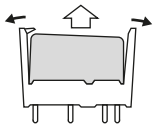

2) In case there is not enough space for finger to pick relay up, use screw drivers in the way as shown in the figure.

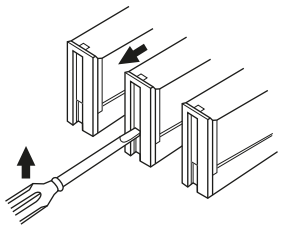

3) Exercise care when removing relays. If greater than necessary force is applied at the socket hooks, deformation may alter the dimensions so that the hook will no longer catch, and other damage may also occur.

GUIDELINES FOR USAGE

- Do not remove or insert relays when they are energized.
- Do not install other brands of relays into these sockets.

©Panasonic Industry Co., Ltd. 2023

■ For cautions for use, please read " GUIDELINES FOR RELAY USAGE ".
https://industrial.panasonic.com/ac/e/control/relay/cautions_use/index.jsp

Precautions for Coil Input

■ Long term current carrying

A circuit that will be carrying a current continuously for long periods without relay switching operation. (circuits for emergency lamps, alarm devices and error inspection that, for example, revert only during malfunction and output warnings with form B contacts) Continuous, long-term current to the coil will facilitate deterioration of coil insulation and characteristics due to heating of the coil itself. For circuits such as these, please use a magnetic-hold type latching relay. If you need to use a single stable relay, use a sealed type relay that is not easily affected by ambient conditions and make a failsafe circuit design that considers the possibility of contact failure or disconnection.

■ DC Coil operating power

Steady state DC current should be applied to the coil. The wave form should be rectangular. If it includes ripple, the ripple factor should be less than 5 %.
However, please check with the actual circuit since the electrical characteristics may vary. The rated coil voltage should be applied to the coil and the set/reset pulse time of latching type relay differs for each relays, please refer to the relay's individual specifications.

■ Coil connection

When connecting coils of polarized relays, please check coil polarity (＋, －) at the internal connection diagram (Schematic). If any wrong connection is made, it may cause unexpected malfunction, like abnormal heat, fire and so on, and circuit do not work. Avoid impressing voltages to the set coil and reset coil at the same time.

■ Maximum allowable voltage and temperature rise

Proper usage requires that the rated coil voltage be impressed on the coil. Note, however, that if a voltage greater than or equal to the maximum continuous voltage is impressed on the coil, the coil may burn or its layers short due to the temperature rise. Furthermore, do not exceed the usable ambient temperature range listed in the catalog.

●Operate voltage change due to coil temperature rise

In DC relays, after continuous passage of current in the coil, if the current is turned OFF, then immediately turned ON again, due to the temperature rise in the coil, the operate voltage will become somewhat higher. Also, it will be the same as using it in a higher temperature atmosphere. The resistance/temperature relationship for copper wire is about 0.4 % for 1 ℃, and with this ratio the coil resistance increases. That is, in order to operate of the relay, it is necessary that the voltage be higher than the operate voltage and the operate voltage rises in accordance with the increase in the resistance value. However, for some polarized relays, this rate of change is considerably smaller.

©Panasonic Industry Co., Ltd. 2023

Ambient Environment

■ Usage, Transport, and Storage Conditions

During usage, storage, or transportation, avoid locations subjected to direct sunlight and maintain normal temperature, humidity and pressure conditions.

●Temperature/Humidity/Pressure

When transporting or storing relays while they are tube packaged, there are cases the temperature may differ from the allowable range. In this case be sure to check the individual specifications.

Also allowable humidity level is influenced by temperature, please check charts shown below and use relays within mentioned conditions. (Allowable temperature values differ for each relays, please refer to the relay's individual specifications.)

1) Temperature:
The tolerance temperature range differs for each relays, please refer to the relay's individual specifications

2) Humidity: 5 to 85 % RH

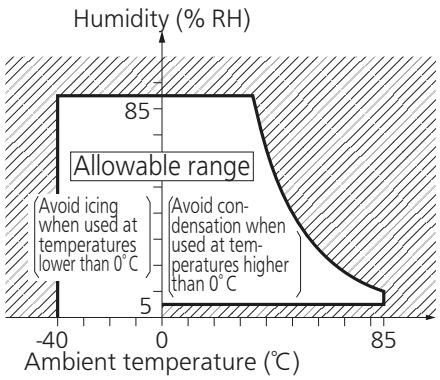

3) Pressure: 86 to 106 kPa

●Dew condensation

Condensation occurs when the ambient temperature drops suddenly from a high temperature and humidity, or the relay is suddenly transferred from a low ambient temperature to a high temperature and humidity. Condensation causes the failures like insulation deterioration, wire disconnection and rust etc. Panasonic Industry Co., Ltd. does not guarantee the failures caused by condensation.

The heat conduction by the equipment may accelerate the cooling of device itself, and the condensation may occur.

Please conduct product evaluations in the worst condition of the actual usage. (Special attention should be paid when high temperature heating parts are close to the device. Also please consider the condensation may occur inside of the device.)

●Icing

Condensation or other moisture may freeze on relays when the temperature become lower than 0 ℃.This icing causes the sticking of movable portion, the operation delay and the contact conduction failure etc. Panasonic Industry Co., Ltd. does not guarantee the failures caused by the icing.

The heat conduction by the equipment may accelerate the cooling of relay itself and the icing may occur. Please conduct product evaluations in the worst condition of the actual usage.

●Low temperature and low humidity

The plastic becomes brittle if the relay is exposed to a low temperature, low humidity environment for long periods of time.

●High temperature and high humidity

Storage for extended periods of time (including transportation periods) at high temperature or high humidity levels or in atmospheres with organic gases or sulfide gases may cause a sulfide film or oxide film to form on the surfaces of the contacts and/or it may interfere with the functions. Check out the atmosphere in which the units are to be stored and transported.

●Package

In terms of the packing format used, make every effort to keep the effects of moisture, organic gases and sulfide gases to the absolute minimum.

●Silicon

When a source of silicone substances (silicone rubber, silicone oil, silicone coating materials and silicone filling materials etc.) is used around the relay, the silicone gas (low molecular siloxane etc.) may be produced.

This silicone gas may penetrate into the inside of the relay. When the relay is kept and used in this condition, silicone compound may adhere to the relay contacts which may cause the contact failure. Do not use any sources of silicone gas around the relay (Including plastic sealed types).

●NOx Generation

When relay is used in an atmosphere high in humidity to switch a load which easily produces an arc, the NOx created by the arc and the water absorbed from outside the relay combine to produce nitric acid.

This corrodes the internal metal parts and adversely affects operation.

Avoid use at an ambient humidity of 85 % RH or higher (at 20 ℃). If use at high humidity is unavoidable, please contact our sales representative.

©Panasonic Industry Co., Ltd. 2023

Others

■ Cleaning

- Although the environmentally sealed type relay (plastic sealed type, etc.) can be cleaned, avoid immersing the relay into cold liquid (such as cleaning solvent) immediately after soldering. Doing so may deteriorate the sealing performance.
- Cleaning with the boiling method is recommended (The temperature of cleaning liquid should be 40 ℃ or lower). Avoid ultrasonic cleaning on relays. Use of ultrasonic cleaning may cause breaks in the coil or slight sticking of the contacts due to ultrasonic energy.

Please refer to **"the latest product specifications"** when designing your product.
• Requests to customers:
https://industrial.panasonic.com/ac/e/salespolicies/

©Panasonic Industry Co., Ltd. 2023

■ Global Sales Network Information: industrial.panasonic.com/ac/e/salesnetwork

Panasonic
INDUSTRY

Panasonic Industry Co., Ltd.
Electromechanical Control Business Division
■1006, Oaza Kadoma, Kadoma-shi, Osaka 571-8506, Japan
industrial.panasonic.com/ac/e/

©Panasonic Industry Co., Ltd. 2023

Specifications are subject to change without notice.
ASCTB180E 202305
2023.5