To Be Discontinued
Last time buy: September 30, 2018

Relay for control panel of 1c 15A, and 2c 10A

HL RELAYS



RoHS compliant

FEATURES

1. Compact high-capacity control relay
In the same external dimensions as an HC relay, this compact power relay enables high-capacity control:
15 A for 1 Form C, 10 A for 2 Form C.
2. Designed for high reliability
High operational reliability is achieved by solder-less construction, in which all connections between lead wires and the contact springs and terminal plate are welded.
3. Various types provided in rich lineup. LED indicator and diode type is also available.
4. The terminals are compatible with #187 series tab terminals.
5. Sockets and terminal sockets are available.

TYPICAL APPLICATIONS

1. Factory automation equipment and automotive devices
2. Control panels, power supply equipment, molding equipment, machine tools, welding equipment, agricultural equipment, etc.
3. Office equipment, automatic vending machines, telecommunications equipment, disaster prevention equipment, copiers, measuring devices, medical equipment, amusement devices, etc.
4. All types of household appliance

ORDERING INFORMATION

HL □ - □ - □ - □ - **F**

Contact arrangement
1: 1 Form C
2: 2 Form C

Terminal arrangement
H: Plug-in type
L: Plug-in type with LED indication
HP: PC board type
PL: PC board type with LED indication
HTM: TM type

Nominal coil voltage
AC 6, 12, 24, 48, 100 (100/110), 120 (110/120), 200 (200/220), 240 (220/240) V
DC 6, 12, 24, 48, 100 (100/110) V

Surge absorber
*D: with diode

Contact material
F: $AgSnO_2$ type

Notes: 1. Certified by C-UL, CSA and TÜV
Please inquire about TV approved products.
2. *Diode type is available. (DC coil Plug-in type with LED indication only)
3. The LED indication color is green for the DC coil and red for the AC coil.

© Panasonic Corporation 2017

To Be Discontinued
Last time buy: September 30, 2018

TYPES

1. Plug-in type

Nominal coil voltage	1 Form C	2 Form C
	Part No.	Part No.
6V AC	HL1-H-AC6V-F	HL2-H-AC6V-F
12V AC	HL1-H-AC12V-F	HL2-H-AC12V-F
24V AC	HL1-H-AC24V-F	HL2-H-AC24V-F
48V AC	HL1-H-AC48V-F	HL2-H-AC48V-F
100/110V AC	HL1-H-AC100V-F	HL2-H-AC100V-F
110/120V AC	HL1-H-AC120V-F	HL2-H-AC120V-F
200/220V AC	HL1-H-AC200V-F	HL2-H-AC200V-F
220/240V AC	HL1-H-AC240V-F	HL2-H-AC240V-F
6V DC	HL1-H-DC6V-F	HL2-H-DC6V-F
12V DC	HL1-H-DC12V-F	HL2-H-DC12V-F
24V DC	HL1-H-DC24V-F	HL2-H-DC24V-F
48V DC	HL1-H-DC48V-F	HL2-H-DC48V-F
100/110V DC	HL1-H-DC100V-F	HL2-H-DC100V-F

Standard packing: Carton: 20 pcs.; Case: 200 pcs.

2. Plug-in type (with LED indication)

Nominal coil voltage	1 Form C	2 Form C
	Part No.	Part No.
6V AC	HL1-L-AC6V-F	HL2-L-AC6V-F
12V AC	HL1-L-AC12V-F	HL2-L-AC12V-F
24V AC	HL1-L-AC24V-F	HL2-L-AC24V-F
48V AC	HL1-L-AC48V-F	HL2-L-AC48V-F
100/110V AC	HL1-L-AC100V-F	HL2-L-AC100V-F
110/120V AC	HL1-L-AC120V-F	HL2-L-AC120V-F
200/220V AC	HL1-L-AC200V-F	HL2-L-AC200V-F
220/240V AC	HL1-L-AC240V-F	HL2-L-AC240V-F
6V DC	HL1-L-DC6V-F	HL2-L-DC6V-F
12V DC	HL1-L-DC12V-F	HL2-L-DC12V-F
24V DC	HL1-L-DC24V-F	HL2-L-DC24V-F
48V DC	HL1-L-DC48V-F	HL2-L-DC48V-F
100/110V DC	HL1-L-DC100V-F	HL2-L-DC100V-F

Standard packing: Carton: 20 pcs.; Case: 200 pcs.

3. Plug-in type (with LED indication and diode)

Nominal coil voltage	1 Form C	2 Form C
	Part No.	Part No.
6V DC	HL1-L-DC6V-D-F	HL2-L-DC6V-D-F
12V DC	HL1-L-DC12V-D-F	HL2-L-DC12V-D-F
24V DC	HL1-L-DC24V-D-F	HL2-L-DC24V-D-F
48V DC	HL1-L-DC48V-D-F	HL2-L-DC48V-D-F
100/110V DC	HL1-L-DC100V-D-F	HL2-L-DC100V-D-F

Standard packing: Carton: 20 pcs.; Case: 200 pcs.

4. PC board type

Nominal coil voltage	1 Form C	2 Form C
	Part No.	Part No.
6V AC	HL1-HP-AC6V-F	HL2-HP-AC6V-F
12V AC	HL1-HP-AC12V-F	HL2-HP-AC12V-F
24V AC	HL1-HP-AC24V-F	HL2-HP-AC24V-F
48V AC	HL1-HP-AC48V-F	HL2-HP-AC48V-F
100/110V AC	HL1-HP-AC100V-F	HL2-HP-AC100V-F
110/120V AC	HL1-HP-AC120V-F	HL2-HP-AC120V-F
200/220V AC	HL1-HP-AC200V-F	HL2-HP-AC200V-F
220/240V AC	HL1-HP-AC240V-F	HL2-HP-AC240V-F
6V DC	HL1-HP-DC6V-F	HL2-HP-DC6V-F
12V DC	HL1-HP-DC12V-F	HL2-HP-DC12V-F
24V DC	HL1-HP-DC24V-F	HL2-HP-DC24V-F
48V DC	HL1-HP-DC48V-F	HL2-HP-DC48V-F
100/110V DC	HL1-HP-DC100V-F	HL2-HP-DC100V-F

Standard packing: Carton: 20 pcs.; Case: 200 pcs.

5. PC board type (with LED indication)

Nominal coil voltage	1 Form C	2 Form C
	Part No.	Part No.
6V AC	HL1-PL-AC6V-F	HL2-PL-AC6V-F
12V AC	HL1-PL-AC12V-F	HL2-PL-AC12V-F
24V AC	HL1-PL-AC24V-F	HL2-PL-AC24V-F
48V AC	HL1-PL-AC48V-F	HL2-PL-AC48V-F
100/110V AC	HL1-PL-AC100V-F	HL2-PL-AC100V-F
110/120V AC	HL1-PL-AC120V-F	HL2-PL-AC120V-F
200/220V AC	HL1-PL-AC200V-F	HL2-PL-AC200V-F
220/240V AC	HL1-PL-AC240V-F	HL2-PL-AC240V-F
6V DC	HL1-PL-DC6V-F	HL2-PL-DC6V-F
12V DC	HL1-PL-DC12V-F	HL2-PL-DC12V-F
24V DC	HL1-PL-DC24V-F	HL2-PL-DC24V-F
48V DC	HL1-PL-DC48V-F	HL2-PL-DC48V-F
100/110V DC	HL1-PL-DC100V-F	HL2-PL-DC100V-F

Standard packing: Carton: 20 pcs.; Case: 200 pcs.

6. TM type

Nominal coil voltage	1 Form C	2 Form C
	Part No.	Part No.
6V AC	HL1-HTM-AC6V-F	HL2-HTM-AC6V-F
12V AC	HL1-HTM-AC12V-F	HL2-HTM-AC12V-F
24V AC	HL1-HTM-AC24V-F	HL2-HTM-AC24V-F
48V AC	HL1-HTM-AC48V-F	HL2-HTM-AC48V-F
100/110V AC	HL1-HTM-AC100V-F	HL2-HTM-AC100V-F
110/120V AC	HL1-HTM-AC120V-F	HL2-HTM-AC120V-F
200/220V AC	HL1-HTM-AC200V-F	HL2-HTM-AC200V-F
220/240V AC	HL1-HTM-AC240V-F	HL2-HTM-AC240V-F
6V DC	HL1-HTM-DC6V-F	HL2-HTM-DC6V-F
12V DC	HL1-HTM-DC12V-F	HL2-HTM-DC12V-F
24V DC	HL1-HTM-DC24V-F	HL2-HTM-DC24V-F
48V DC	HL1-HTM-DC48V-F	HL2-HTM-DC48V-F
100/110V DC	HL1-HTM-DC100V-F	HL2-HTM-DC100V-F

Standard packing: Carton: 20 pcs.; Case: 200 pcs.

© Panasonic Corporation 2017

RATING

1. Coil data

1) AC coils

Nominal coil voltage	Nominal coil current (mA)		Nominal operating power (VA)		Pick-up voltage (at 20°C 68°F)	Drop-out voltage (at 20°C 68°F)	Inductance (H)		Max. applied voltage (at 70°C 158°F)
	50Hz	60Hz	50Hz	60Hz			When drop-out	When operating	
6V AC	224	200	1.3	1.2	80%V or less of nominal voltage (Initial)	30%V or more of nominal voltage (Initial)	0.078	0.074	110%V of nominal voltage
12V AC	111	100					0.312	0.295	
24V AC	56	50					1.243	1.181	
48V AC	28	25					4.974	4.145	
100/110V AC	13.4/14.7	12/13.2					23.75	20.63	
110/120V AC	12.2/13.5	10.9/11.9					27.19	25.57	
200/220V AC	6.7/7.4	6/6.6					85.98	81.76	

Notes: 1. The relay operates in a range of 80% to 110% V of the nominal voltage, but ideally, in consideration of temporary voltage fluctuations, it should be operated at the rated voltage.
In particular, for AC operation, if the applied voltage drops to 80% V or more below the nominal voltage, humming will occur and a large current will flow leading possibly to coil burnout.
2. The maximum applied voltage is the maximum voltage fluctuation value for the coil power supply. This value is not a permissible value for continuous operation. (This value differs depending on the ambient temperature. Please contact us for details.)

2) DC coils (at 20°C 68°F)

Nominal coil voltage	Nominal coil current (mA)	Nominal operating power (W)	Coil resistance (Ω)	Pick-up voltage (at 20°C 68°F)	Drop-out voltage (at 20°C 68°F)	Max. applied voltage (at 70°C 158°F)
6V DC	150	0.9	40	80%V or less of nominal voltage (Initial)	10%V or more of nominal voltage (Initial)	110%V of nominal voltage
12V DC	75		160			
24V DC	37		650			
48V DC	18.5		2,600			
100/110V DC	10	1.0	10,000			

Notes: 1. The nominal operating current is ±10% (20°C 68°F).
2. The coil resistance for DC operation is the value measured when the coil temperature is 20°C 68°F. Compensate ±0.4% for every ±1°C change in temperature.
3. The relay operates in a range of 80% to 110% V of the nominal voltage, but ideally, in consideration of temporary voltage fluctuations, it should be operated at the nominal voltage.
4. For use with 200 V DC, connect a 10 KΩ (5W) resistor, in series, to the 100 V DC relay.
5. The maximum applied voltage is the maximum voltage fluctuation value for the coil power supply. This value is not a permissible value for continuous operation. (This value differs depending on the ambient temperature. Please contact us for details.)

2. Specifications

Characteristics	Item		Specifications
Contact	Contact resistance (Initial)		Max. 50 mΩ (By voltage drop 6 V DC 1A)
	Contact material		$AgSnO_2$ type
Rating	Nominal switching capacity*4		1 Form C: 15A 125V AC, 10A 250V AC (resistive load) 2 Form C: 10A 250V AC (resistive load)
	Min. switching capacity (Reference value)*1		100mA 5V DC
Electrical characteristics	Insulation resistance (Initial)		Min. 100MΩ (at 500V DC) Measurement at same location as “Breakdown voltage” section.
	Breakdown voltage (Initial)	Between open contacts	1,000 Vrms for 1min. (Detection current: 10mA)
		Between contact sets	1,500 Vrms for 1min. (Detection current: 10mA)
		Between contact and coil	2,000 Vrms for 1min. (Detection current: 10mA)
	Temperature rise (coil)		Max. 80°C 176°F (By resistive method, nominal voltage)
	Operate time (at 20°C 68°F)*2		DC type/AC type: Max. 25ms (Nominal coil voltage applied to the coil, excluding contact bounce time.)
	Release time (at 20°C 68°F)*2		DC type/AC type: Max. 25ms (Nominal coil voltage applied to the coil, excluding contact bounce time.) (without diode)
Mechanical characteristics	Shock resistance	Functional	Min. 196 m/s² (Half-wave pulse of sine wave: 11 ms; detection time: 10μs.)
		Destructive	Min. 980 m/s² (Half-wave pulse of sine wave: 6 ms.)
	Vibration resistance	Functional	10 to 55 Hz at double amplitude of 1 mm (Detection time: 10μs.)
		Destructive	10 to 55 Hz at double amplitude of 2 mm
Expected life	Mechanical		AC type: 5×10^7 (at 180 times/min.), DC type: 10^8 (at 180 times/min.)
	Electrical	AC load	1 Form C: 15A 125V AC, 10A 250V AC resistive load (cosφ=1) Life switching cycle: Min. 5×10^5 2 Form C: 10A 250V AC resistive load (cosφ=1) Life switching cycle: Min. 3×10^5
		DC load	1 Form C: 3A 30V DC resistive load (cosφ=1) Life switching cycle: Min. 5×10^5 2 Form C: 3A 30V DC resistive load (cosφ=1) Life switching cycle: Min. 5×10^5
Conditions	Conditions for operation, transport and storage*3		Ambient temperature: –50°C to +70°C –58°F to +158°F (Without LED indication); –50°C to +60°C –58°F to +140°F (With LED indication) Humidity: 5 to 85% R.H. (Not freezing and condensing at low temperature)
	Max. Operating speed		20 times/min. (at max. rating)
Unit weight			Approx. 35g 1.23 oz

Notes: If integrating into electrical appliances that will be subject to compliance to the Electrical Appliance and Material Safety Law, please use in an ambient temperature between –50°C to +40°C –58°F to +104°F (AC type).
*1. This value can change due to the switching frequency, environmental conditions and desired reliability level, therefore it is recommended to check this with the actual load.
*2. For the AC coil types, the operate/release time will differ depending on the phase.
*3. The upper limit of the ambient temperature is the maximum temperature that can satisfy the coil temperature rise value. Refer to Usage, transport and storage conditions in NOTES.
*4. When using the socket, be sure to verify the max. continuous current.

© Panasonic Corporation 2017

To Be Discontinued
Last time buy: September 30, 2018

REFERENCE DATA

Switching capacity range (1 Form C)

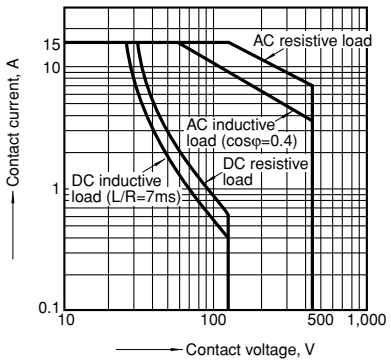

Switching capacity range (2 Form C)

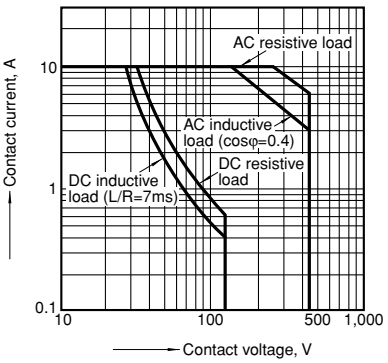

With diode type (For DC)

1. DC coil surge voltage waveform (without diode)

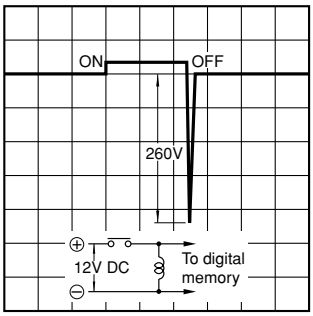

2. DC coil surge voltage waveform (with diode)

Diode characteristics;
Reverse breakdown voltage: 1,000V,
Forward current: 1A

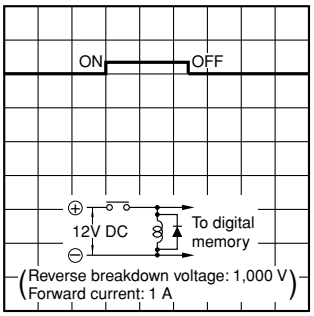

DIMENSIONS (mm inch)

The CAD data of the products with a CAD Data mark can be downloaded from: http://industrial.panasonic.com/ac/e/

1. Plug-in type

1 Form C

CAD Data



External dimensions

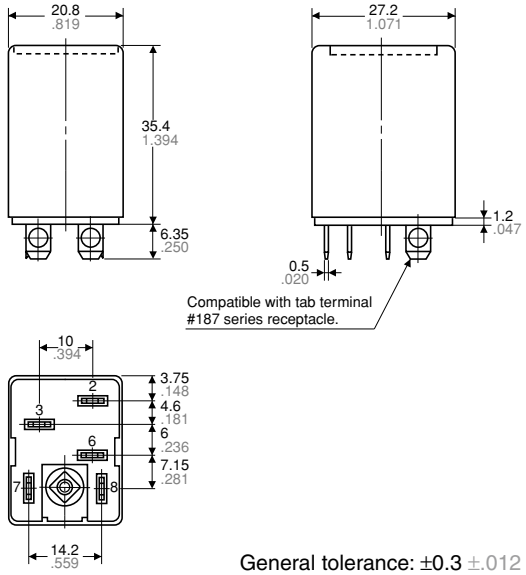

General tolerance: ±0.3 ±.012

Schematic (Bottom view)

Standard type

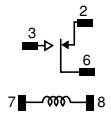

With diode type

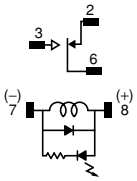

LED AC type

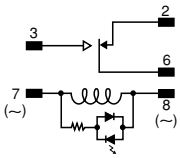

LED DC type

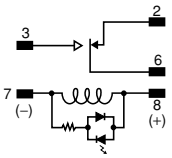

© Panasonic Corporation 2017

2 Form C

CAD Data



External dimensions

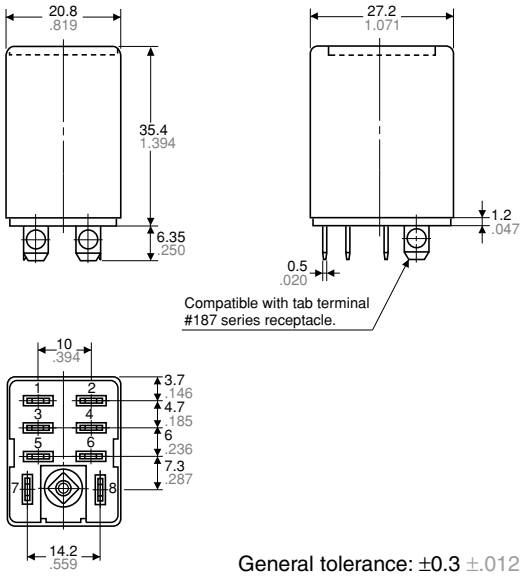

General tolerance: ±0.3 ±.012

Schematic (Bottom view)

Standard type

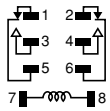

With diode type

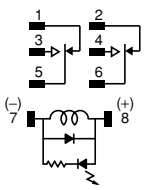

LED AC type

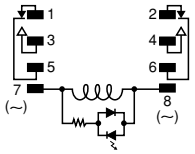

LED DC type

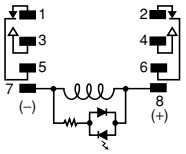

2. PC board type

1 Form C

CAD Data



External dimensions

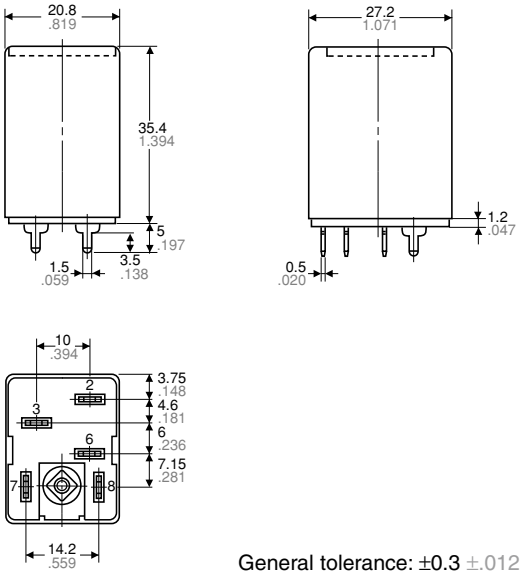

General tolerance: ±0.3 ±.012

Schematic (Bottom view)

Standard type

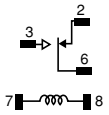

LED AC type

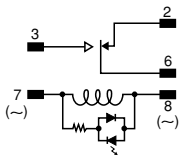

LED DC type

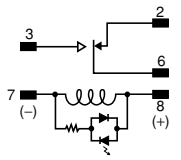

PC board pattern (Bottom view)

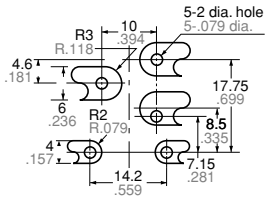

Tolerance: ±0.1 ±.004

© Panasonic Corporation 2017

To Be Discontinued
Last time buy: September 30, 2018

2 Form C

CAD Data



External dimensions

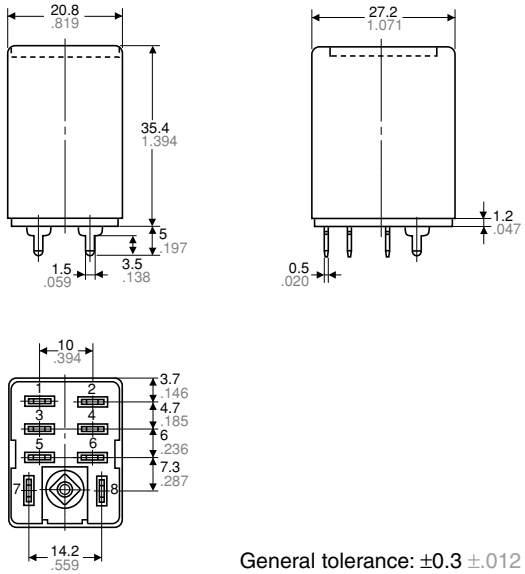

General tolerance: ±0.3 ±.012

Schematic (Bottom view)

Standard type

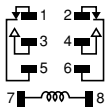

LED AC type

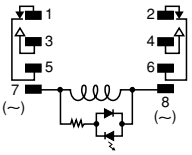

LED DC type

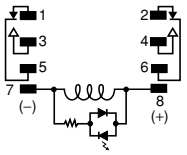

PC board pattern (Bottom view)

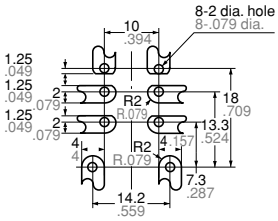

Tolerance: ±0.1 ±.004

3. TM type

1 Form C

CAD Data



External dimensions

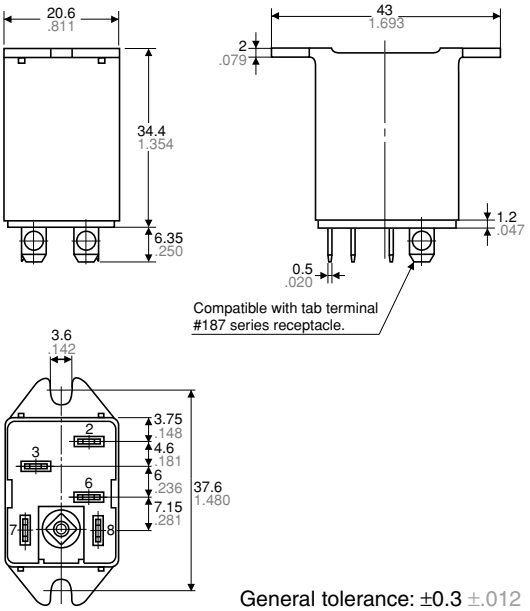

General tolerance: ±0.3 ±.012

Schematic (Bottom view)

Standard type

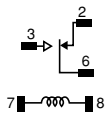

Chassis (Panel) cutout

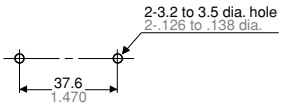

Chassis (Panel) cutout in tandem mounting

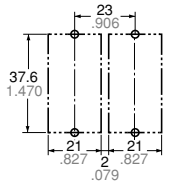

Tolerance: ±0.1 ±.004

Notes: 1. If connecting to #187 series tab terminals, use AMP Faston #187 series or #187 tab terminals conforming to UL or CSA inch-standard dimensions.
2. In mounting, use M3 screws and M3 washers.
3. When mounting TM types, use washers to prevent damage or distortion to the polycarbonate cover.
4. When tightening fixing screws, the optimum torque range should be 0.294 to 0.49 N·m, (3 to 5 kgf·cm). Moreover, use washers to prevent loosening.

© Panasonic Corporation 2017

2 Form C

CAD Data



External dimensions

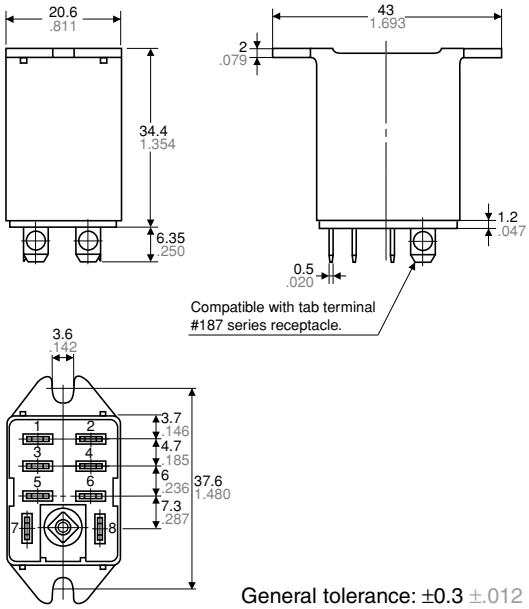

General tolerance: ±0.3 ±.012

Schematic (Bottom view)

Standard type

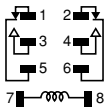

Chassis (Panel) cutout

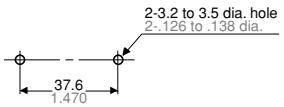

Chassis (Panel) cutout in tandem mounting

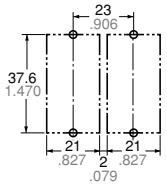

Tolerance: ±0.1 ±.004

Notes: 1. If connecting to #187 series tab terminals, use AMP Faston #187 series or #187 tab terminals conforming to UL or CSA inch-standard dimensions.
2. In mounting, use M3 screws and M3 washers.
3. When mounting TM types, use washers to prevent damage or distortion to the polycarbonate cover.
4. When tightening fixing screws, the optimum torque range should be 0.294 to 0.49 N·m, (3 to 5 kgf·cm). Moreover, use washers to prevent loosening.

SAFETY STANDARDS

1. Standard type (Plug-in type except with diode, PC board type, TM type)

Contact arrangement	UL/C-UL (Recognized)		CSA (Certified)		TV rating (UL/CSA)		TÜV rating	
	File No.	Contact rating	File No.	Contact rating	File No.	Rating	File No.	Rating
1 Form C	E43028*1	15A 250V AC 1/3HP 125, 250V AC 10A 30V DC	—	CSA standard certified by C-UL	UL: E43149 CSA: LR26550 etc.	NO→TV-5 NC→TV-2	B1305 13461 341	15A 125V AC (cosϕ=1.0) 10A 250V AC (cosϕ=1.0) 10A 30V DC (L/R=0ms)
2 Form C	E43028*1	10A 250V AC 1/3HP 125, 250V AC 10A 30V DC	—	CSA standard certified by C-UL	UL: E43149 CSA: LR26550 etc.	NO→TV-4 NC→TV-2	B1305 13461 341	10A 250V AC (cosϕ=1.0) 10A 30V DC (L/R=0ms)

2. Plug-in type (with diode)*2

Contact arrangement	UL/C-UL (Recognized)		CSA (Certified)		TV rating (UL/CSA)		TÜV rating	
	File No.	Contact rating	File No.	Contact rating	File No.	Rating	File No.	Rating
1 Form C	E43028*1	15A 250V AC 1/3HP 125, 250V AC 10A 30V DC	—	CSA standard certified by C-UL	—	—	B1305 13461 341	15A 125V AC (cosϕ=1.0) 10A 250V AC (cosϕ=1.0) 10A 30V DC (L/R=0ms)
2 Form C	E43028*1	10A 250V AC 1/3HP 125, 250V AC 10A 30V DC	—	CSA standard certified by C-UL	—	—	B1305 13461 341	10A 250V AC (cosϕ=1.0) 10A 30V DC (L/R=0ms)

Note: "*1" indicates the UL/C-UL recognition file number.
"*2" DC coil Plug-in type with LED indication only.

NOTES

1. For cautions for use, please read "General Application Guidelines".

© Panasonic Corporation 2017

Please contact .....

Panasonic Corporation
Electromechanical Control Business Division
■ 1006, Oaza Kadoma, Kadoma-shi, Osaka 571-8506, Japan
industrial.panasonic.com/ac/e/

Panasonic®

©Panasonic Corporation 2017

ASCTB114E-1 201709-T

Specifications are subject to change without notice.