THIS COPY IS PROVIDED ON A RESTRICTED BASIS AND IS NOT TO BE USED IN ANY WAY DETRIMENTAL TO THE INTERESTS OF PANDUIT CORP.

PANDUIT P/N	WEIGHT
CMRPSH20STL	6 lb (2.7 kg)

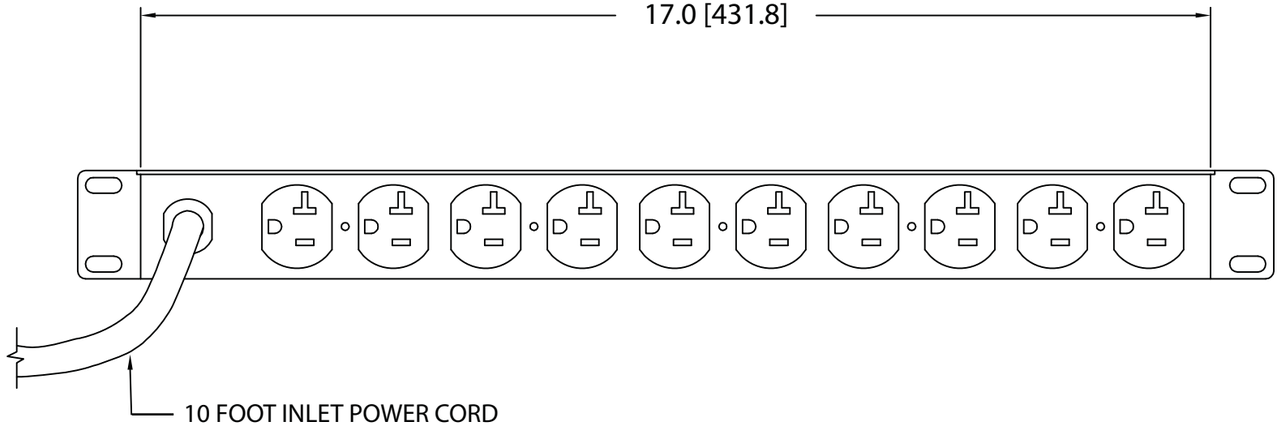

NOTES:
1. IDENTIFICATION: 1RU HORIZONTAL, (10) 5-20R
   120V / 20A / SINGLE-PHASE POU

PART NO.	COLOR
CMRPSH20STL	BLACK

2. ACCESSORY COMPONENTS:
   (4) 10-32 x 1/2" MOUNTING SCREWS
   (4) 12-24 x 1/2" MOUNTING SCREWS
3. DIMENSIONS IN PARENTHESES ARE METRIC (mm).
4. SURGE SUPPRESSION UP TO 330V OR 720 JOULES.
5. UL® & c-UL® LISTED 60950.
6. RoHS COMPLIANT.
7. VISIT OUR ON-LINE CATALOG AT WWW.PANDUIT.COM FOR A CURRENT LIST OF PRODUCTS APPLICABLE FOR USE WITH THIS PART.
8. MAXIMUM AVAILABLE INPUT POWER = 1.9 KW
9. INSTALLATION SHALL COMPLY WITH ALL APPLICABLE NATIONAL, STATE, AND LOCAL CODES.

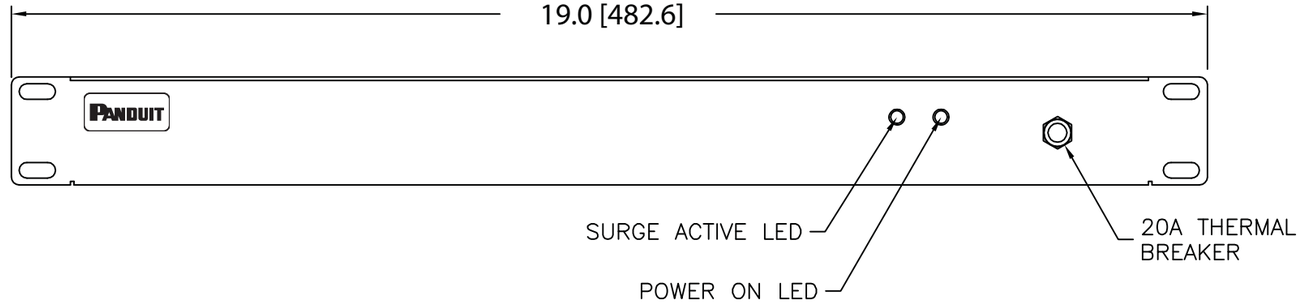

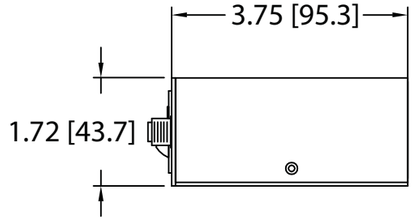

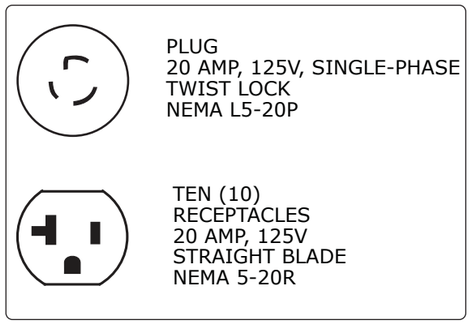

REV	DATE	BY	CHK	DESCRIPTION	ECN - R	CUST	SUP	OTH
00A	10-26-11	MRWA		RELEASED TO PRODUCTION	09V098YE			

MODEL FILENAME: 09V098YE/00.PRT
CAD FILENAME/LAYERS: 09V098YE_DC/00A.PRT

PANDUIT CORP TINLEY PARK, ILLINOIS

1RU HORIZONTAL, (10) 5-20R
POWER OUTLET UNIT (CMRPSH20STL)
CUSTOMER DRAWING

UNLESS OTHERWISE SPECIFIED, DIMENSIONAL TOLERANCES ARE:
INCHES: X.X +/- 0.03, X.XX +/- 0.015, X.XXX +/- 0.005
[METRIC - MILLIMETER]: X. +/- 0.8, X.X +/- 0.4, X.XX +/- 0.13
ANGLE +/- 1°

UNLESS OTHERWISE SPECIFIED, ALL DIMENSIONS ARE GIVEN IN INCHES, THIRD ANGLE PROJECTION

DRAWN BY: MRWA
DATE: 10-26-11
CHK'D:
MAT'L:
SCALE: NONE
DRAWING NO.: 09V098YE
DWG SIZE: B