THIS COPY IS PROVIDED ON A RESTRICTED BASIS AND IS NOT TO BE USED IN ANY WAY DETRIMENTAL TO THE INTERESTS OF PANDUIT CORP.

PANDUIT P/N	WEIGHT
CMRPSH20TL	6 lb (2.7 kg)

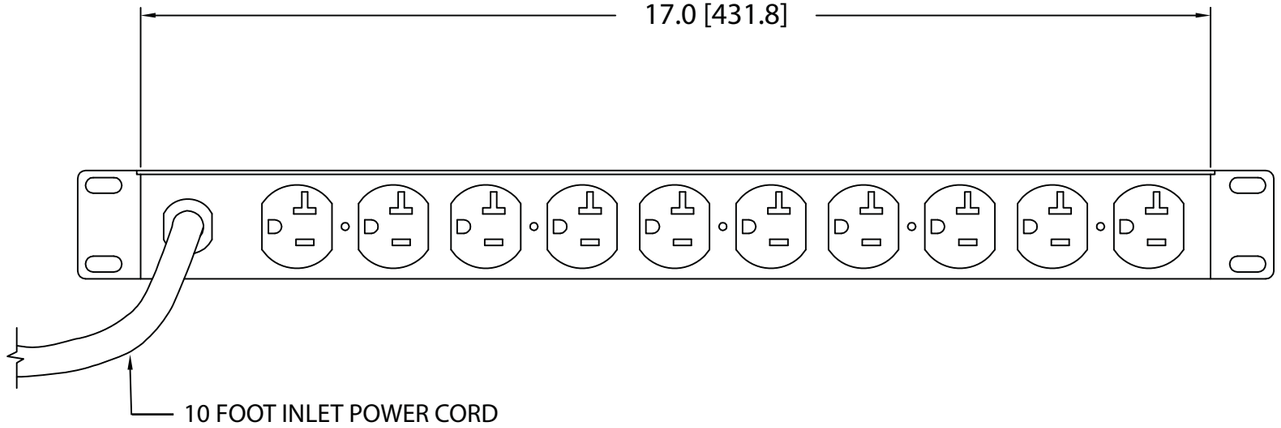

NOTES:
1. IDENTIFICATION: 1RU HORIZONTAL, (10) 5-20R
   120V / 20A / SINGLE-PHASE POU

PART NO.	COLOR
CMRPSH20TL	BLACK

2. ACCESSORY COMPONENTS:
   (4) 10-32 x 1/2" MOUNTING SCREWS
   (4) 12-24 x 1/2" MOUNTING SCREWS
3. DIMENSIONS IN PARENTHESES ARE METRIC (mm).
5. UL® & c-UL® LISTED 60950.
6. RoHS COMPLIANT.
7. VISIT OUR ON-LINE CATALOG AT WWW.PANDUIT.COM FOR A CURRENT LIST OF PRODUCTS APPLICABLE FOR USE WITH THIS PART.
8. MAXIMUM AVAILABLE INPUT POWER = 1.9 KW
9. INSTALLATION SHALL COMPLY WITH ALL APPLICABLE NATIONAL, STATE, AND LOCAL CODES.

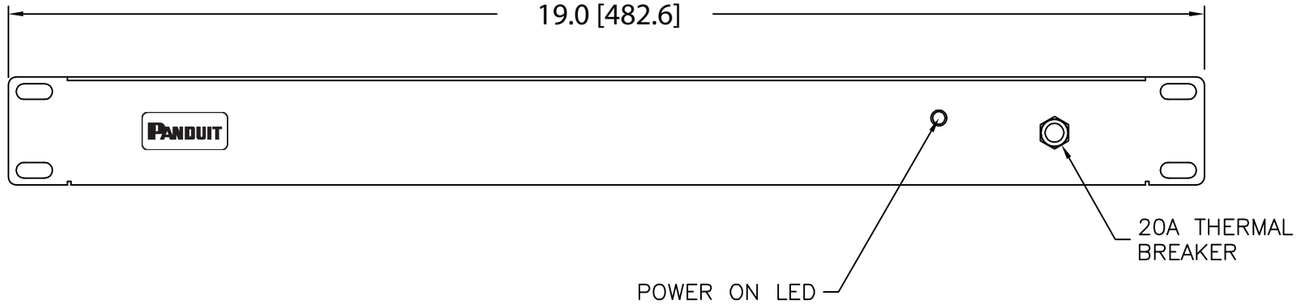

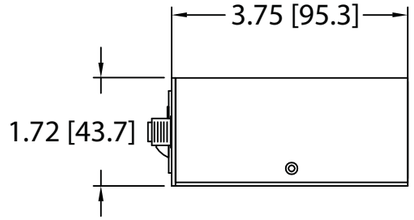

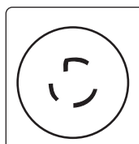

PLUG
20 AMP, 125V, SINGLE-PHASE
TWIST LOCK
NEMA L5-20P



TEN (10)
RECEPTACLES
20 AMP, 125V
STRAIGHT BLADE
NEMA 5-20R

REV	DATE	BY	CHK	DESCRIPTION	ECN - R	CUST	SUP	OTH
01A	9-18-12	PIP	MRWA	A. UPDATED TITLE BLOCK.	09V098ZV			
00A	2-14-12	MRWA	KRKE	RELEASED TO PRODUCTION	09V098ZV			

MODEL FILENAME: 09V098ZV/01.PRT
CAD FILENAME/LAYERS: 09V098ZV_DC/01A.PRT

PANDUIT CORP TINLEY PARK, ILLINOIS

1RU HORIZONTAL, (10) 5-20R
POWER OUTLET UNIT
CUSTOMER DRAWING

UNLESS OTHERWISE SPECIFIED, DIMENSIONAL TOLERANCES ARE:
INCHES: X.X +/- 0.03; X.XX +/- 0.015; X.XXX +/- 0.005
[METRIC - MILLIMETER]: X. +/- 0.8; X.X +/- 0.4; X.XX +/- 0.13
ANGLE +/- 1°

UNLESS OTHERWISE SPECIFIED, ALL DIMENSIONS ARE GIVEN IN INCHES, THIRD ANGLE PROJECTION

DRAWN BY: MRWA
MAT'L:
SCALE: NONE
DATE: 2-14-12
DRAWING NO.: 09V098ZV
DWG: B
CHK'D: KRKE
SIZE