THIS COPY IS PROVIDED ON A RESTRICTED BASIS AND IS NOT TO BE USED IN ANY WAY DETRIMENTAL TO THE INTERESTS OF PANDUIT CORP.

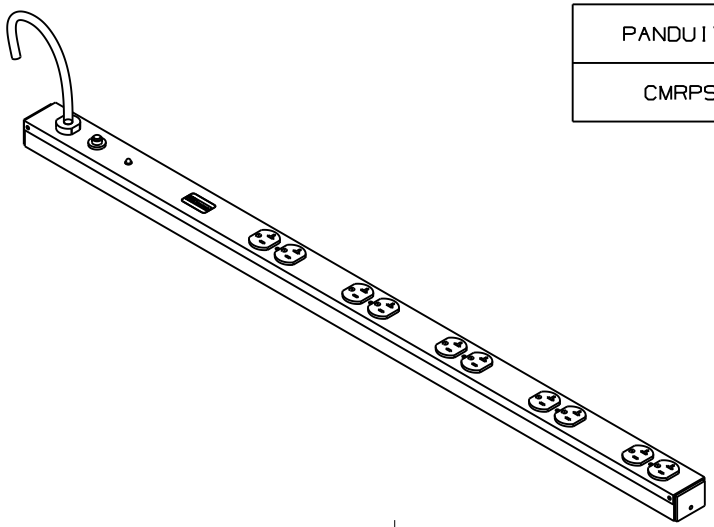

PANDUIT P/N	WEIGHT
CMRPSV20	06.8 LBS/EACH 3.1 Kg/EACH

NOTES:
1. VISIT OUR ON-LINE CATALOG AT WWW.PANDUIT.COM FOR A CURRENT LIST OF PRODUCTS APPLICABLE FOR USE WITH THIS PART.
2. ACCESSORY COMPONENTS:
   (2) #10-32 X 1/2" MOUNTING SCREWS
   (2) #12-24 X 1/2" MOUNTING SCREWS
   (2) #10-32 LOCKING COLLAR SCREWS
   (2) L-BRACKETS
3. THE POWER STRIP SHALL HAVE THE FOLLOWING:
   -TEN (10) - NEMA 5-20R OUTLETS (5 DUPLEX 20 AMP RECEPTACLES)
   -10 FOOT POWER CORD WITH NEMA 5-20P PLUG
4. DIMENSIONS IN PARENTHESES ARE METRIC (mm).

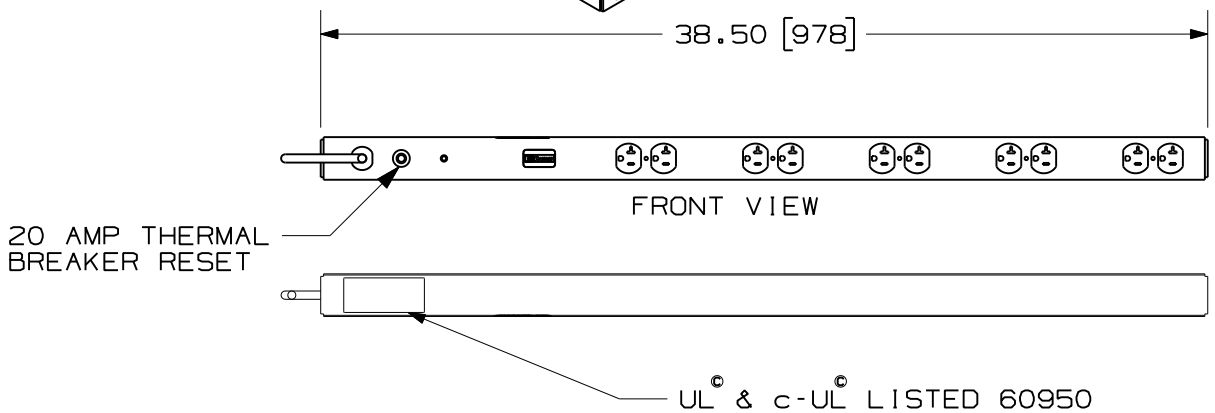

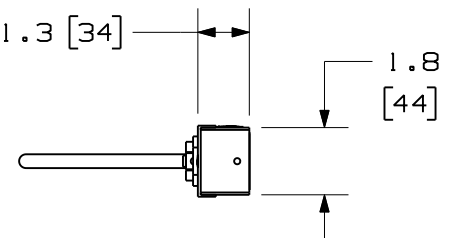

MODEL FILENAME: V01129CD/04E.PRT

CAD FILENAME/LAYERS: V01129CD_DC/04E

REV	DATE	BY	CHK	DESCRIPTION	ECN - R	CUST	SUP	OTH
---	---	---		M. ADDED -10 FOOT POWER CORD WITH NEMA 5-20P TEXT TO NOTE 3 N. MODIFIED TITLE BLOCK O. ADDED CIRCUIT BREAKER RESET LABEL	---			
04E	3-26-10	MRWA		L. REFORMATTED DRAWING K. CHANGED TEXT IN NOTE 2 FROM (2) L-BRACKETS FOR NETFRAME MOUNTING J. REMOVED (2) BRACKETS FOR STD. CHANNEL FRAME MOUNTING FROM NOTE 2. I. ADDED ISO-VIEW	01129-07			
04D	4-28-09	MRWA	MJM	H. RE-NUMBERED NOTES G. NOTE 4 WAS ADDED F. NOTE 3 WAS SEE SPEC. SHEET SA-NC105P01FF FOR TECHNICAL SPECIFICATIONS	01129-07			
2	4-22-02	MAV		E. ADDED SPEC. SHEET # D. ADDED VOLTAGE TO NOTE #1 C. REMOVED THUMB SCREWS W/ RETAINING RINGS	01129-07			
1	9-7-01	MAV	MJM	B. CHANGED REF. DIMENSION A. REVISED ACCESSORY COMPONENTS	01129-07	JWI		
R	7-24-01	TMW	MJM	RELEASED TO PRODUCTION	01129-07	JWI		

PANDUIT CORP. TINLEY PARK, ILLINOIS

38.5" VERTICAL POWER STRIP 20 AMP 125V (CMRPSV20) CUSTOMER DRAWING

UNLESS OTHERWISE SPECIFIED, DIMENSIONAL TOLERANCES ARE:

INCHES		[METRIC - MILLIMETER]		ANGLE
X.X	± 0.06	X.	± 1.5	± 1°
X.XX	± 0.03	X.X	± 0.8	
X.XXX	± 0.015	X.XX	± 0.4	

UNLESS OTHERWISE SPECIFIED, ALL DIMENSIONS ARE GIVEN IN INCHES, THIRD ANGLE PROJECTION.

DRAWN BY: JDWE

DATE: 7-24-01

CHK'D: MJM

MAT'L: COLD-ROLLED STEEL

SCALE: NONE

DRAWING NO.: 01129-07

DWG SIZE: A