Web Site: www.parallax.com
Forums: forums.parallax.com
Sales: sales@parallax.com
Technical: support@parallax.com

Office: (916) 624-8333
Fax: (916) 624-8003
Sales: (888) 512-1024
Tech Support: (888) 997-8267

Boe-Bot Tank Treads (#28106)

Treaded Addition for the Boe-Bot® Robot

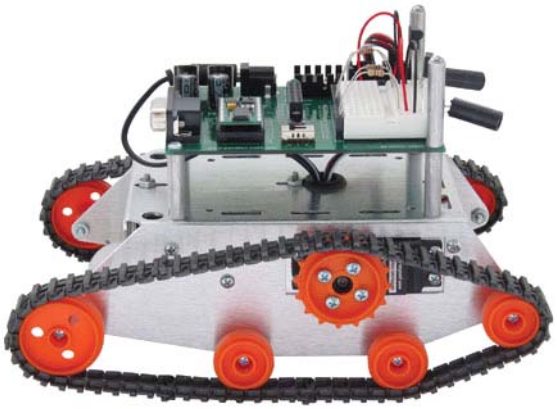

Introduction

Treads let the Boe-Bot access more varied terrain such as carpet, small rocks or imperfect surfaces. This kit involves the removal of the Boe-Bot wheels and addition of a treaded drive train.

Packing List

Part #	Description	Qty
700-00002	4-40 Machine Screw, 3/8”	6
700-00003	4-40 Nut – 700-00003	22
700-00007	4-40 Machine Screw, 7/8”	8
700-00028	4-40 Machine Screw, 1/4”	8
700-00059	#4 Lock Washer	8
710-00008	1.5” Screw	2
713-00003	1.25” Standoff	2
720-28106	Metal Sides	2
721-28106	Plastic Wheel and Rubber Tread set	1
725-00013	Servo Horns – may be standard or round disc	2

Tools Needed

You will need a #2 Philips screwdriver, wrench, and a 3/32” drill (or hobby knife like an X-acto® knife).

Assembly

Step 1: From the set of wheels, cut out the following and trim off any burrs:

- (2) large wheels (with teeth)
- (2) large wheels (no teeth)
- (6) medium-sized wheels (no teeth)

The remaining wheels are not used for this application. However, the wheels with sprockets can be modified and used if there is a tread alignment problem; for details refer to the “Troubleshooting the Tread” section on page 4.

Step 2: The servo horn will need four of the holes enlarged for the 4-40 screws. The holes need to be smaller than the screw so that when the screws are inserted they will make their own threads. You can drill the holes using a 3/32" drill bit, or use an X-acto knife to enlarge the holes as shown below, depending on which servo horns were included in your kit. If you are using the knife, be sure not to over-enlarge the holes. By reaming with the knife a little from both the top and bottom, the hole will be more uniform in size.

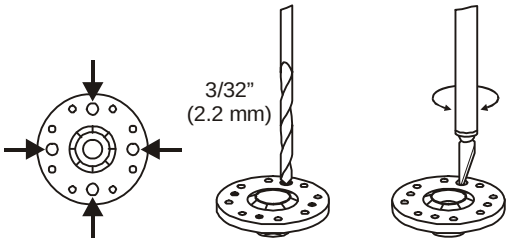

Enlarge the <u>Middle Holes</u> if using Disc Servo Horns

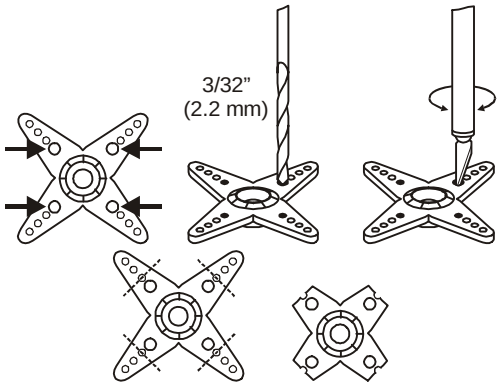

Enlarge <u>Inner Holes</u> if using Standard Servo Horns

Step 3: Using the ¼" length screws, attach the two large wheels (with teeth) to the servo horns.

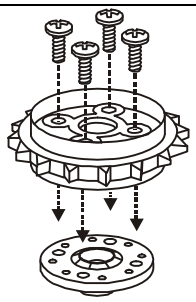

Step 4: Attach the 7/8" length screws and nuts to the remaining wheels (2 large and 6 medium in size) as shown below, and set aside.

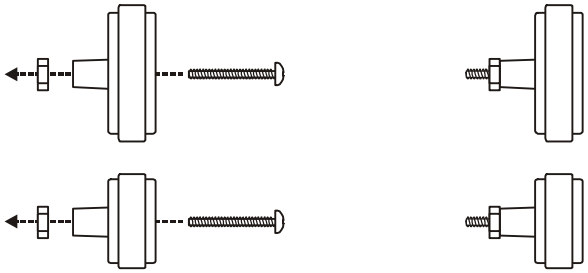

Step 5: Remove the wheels from your Boe-Bot. The servos should be mounted with the head toward the rear ball wheel as in Figure 5. The servo mounting tabs need to be on the outside of the Boe-Bot chassis. Confirm that the servos are mounted correctly. If your servos are mounted the opposite way, or are mounted from inside the chassis, remove them and remount as shown.

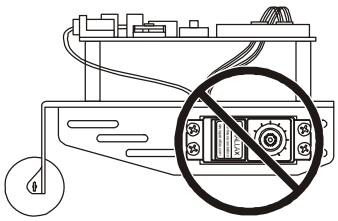

←Wrong Way→

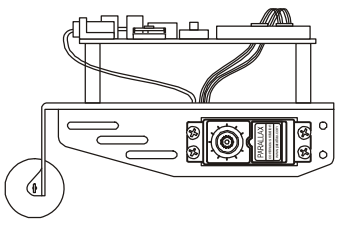

←Right Way→

Servo head is mounted toward tail wheel

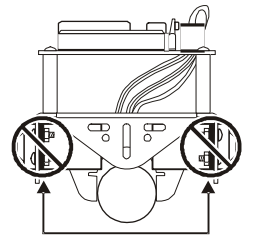

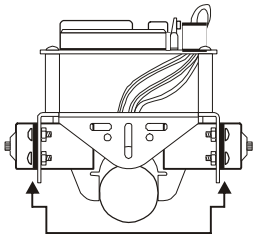

Servo mounting tabs are outside of chassis

Step 6: Attach the sides first, using 3/8" length screws and nuts as shown. Then attach the servo horn (with wheel) using the screw that came with the servo.

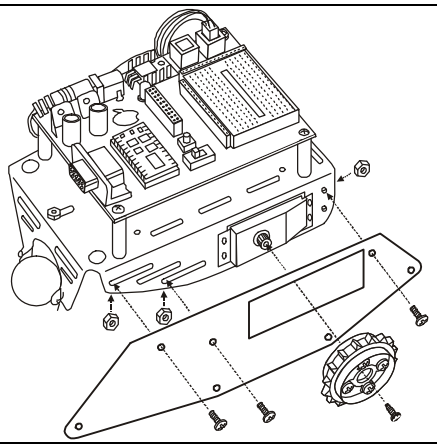

Step 7: Attach the remaining wheels by first tightening the nut on the wheel then loosening it 1/4 to 1/3 of a turn. Attach the wheel assembly to the frame with a nut and a lock washer on the inside of the frame. When the two nuts on each wheel are tightened, check to see that there is a very small gap between the wheel and outside nut to allow for easy rolling, as shown.

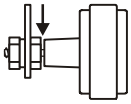

Step 8: Mount the remaining wheel assemblies with lock washers and nuts. When tightening, leave a very small gap on the wheel side so the wheel can turn freely, as shown.

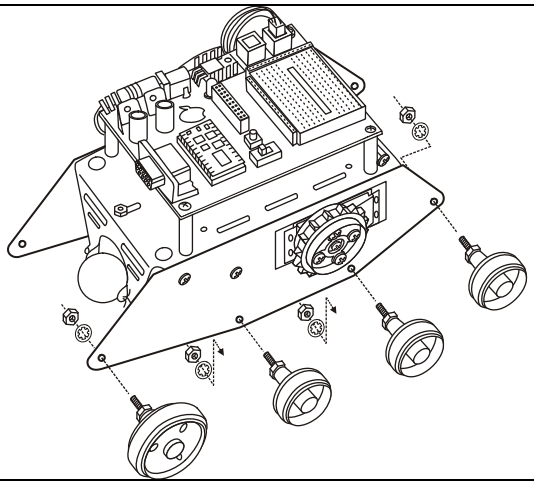

Step 9: Separate all the rubber tread pieces and connect together as shown below. Each loop contains 1 long, 2 medium and 2 short treads. Please do not pull the treads to disconnect from one another; please use scissors or an X-acto® knife. Pulling on the treads will stretch them beyond use. Check each wheel to make sure it rolls without binding. If any wheels bind, loosen the nut and remount to maintain a very small gap between the wheel and nut. Carefully stretch the tread over the wheels.

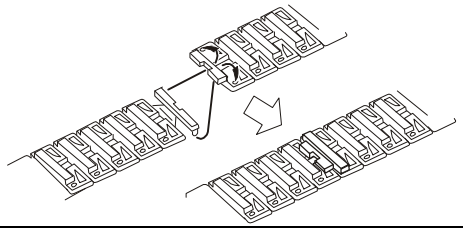



Step 10: The Boe-Bot robot's breadboard circuit can be protected by installing the (2) 1.5" screws and (2) 1.25" spacers on the front of the Board of Education®. The assembly is now done.

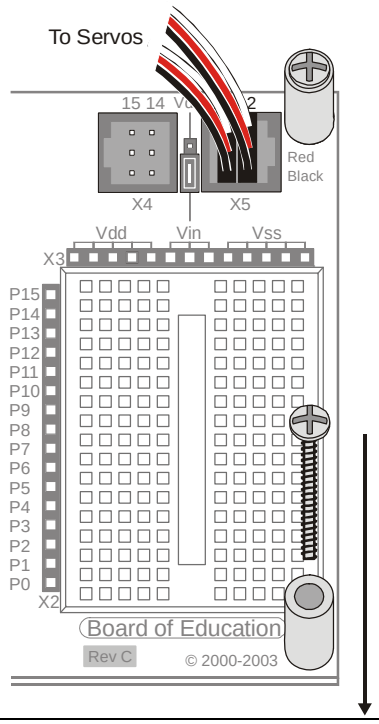

Troubleshooting the Tread

If the tread is loose and comes off, check to see that all the wheels have very little movement when pulled. They should roll easily but should not be floppy. If the wheels are floppy, loosen the two nuts and re-tighten. If the treads are still loose, the servo mounting screws can be loosened, the servo moved up, and the screws re-tightened.

Should the tread come off while turning and the wheels have been adjusted and tightened, try swapping the two bottom wheels (front to rear and rear to front). The plastic might be too rounded. Also check the tread connection joints. If the interlocking rubber tabs are not pressed together firmly, they could snag on carpet. If there is still a problem, the two unused wheels with sprockets can replace the two front bottom wheels. You will need to drill or cut the end of the wheel so the screw will go through.

If you experience any problems with the assembly or use of your Tank Treads, you may contact us at support@parallax.com or call 1-888-99-STAMP (1-888-997-8267) M-F 7:00 am to 5:00 pm PT.

Example Code for Basic Maneuvers

The program below is a modified version of the program ForwardLeftRightBackward.bs2. from *Robotics with the Boe-Bot.* The FOR...NEXT loop *EndValue* arguments have been increased, because the Tank Treads cause a slower ground speed than the regular Boe-Bot wheels. Any program from Robotics with the Boe-Bot can be used with the Tank Treads kit, but programs that rely on maneuvers of a certain distance or rotation will need to have these *EndValue* arguments adjusted.

```
' Boe-Bot Tank Tread Kit –
' BasicTankMoves.BS2
' Drives forward, turns left, turns right,
' reverse

'{$STAMP BS2}
'{$PBASIC 2.5}

DEBUG "Program Running!"

counter VAR Word

FOR counter = 1 TO 100      ' Forward
  PULSOUT 13, 850
  PULSOUT 12, 650
  PAUSE 20
NEXT

FOR counter = 1 TO 50       ' Turn left
  PULSOUT 13, 650
  PULSOUT 12, 650
  PAUSE 20
NEXT

FOR counter = 1 TO 50       ' Turn right
  PULSOUT 13, 850
  PULSOUT 12, 850
  PAUSE 20
NEXT

 FOR counter = 1 TO 100     ' Reverse
  PULSOUT 13, 650
  PULSOUT 12, 850
  PAUSE 20
NEXT

END
```

Download additional application examples and code from www.parallax.com.