PASTERNACK
an INFINITE brand



6 Bit TTL Controlled Programmable Attenuator, 31.5 dB Up to 13 GHz, 0.5 dB Steps, SMA Female

TECHNICAL DATA SHEET PE70A4000

The PE70A4000 is a 6-Bit Digital Attenuator that has 31.5 dB of total attenuation with bit values of 0.5 (LSB), 1, 2, 4, 8, and 16 dB across a wide frequency range from DC to 13 GHz. The design is based on GaAs IC technology that offers exceptional performance characteristics that include 5.5 dB typical insertion loss at 13 GHz, +38 dB input IP3, and fast switching speed of 45 nsec. The design also features excellent Attenuation Accuracy with +/- 0.3 dB typical bit error and single control lines per bit that are CMOS compatible. The drop-in package is hermetically sealed and supports Field Replaceable SMA connectors. And for added confidence, this rugged package assembly is deisgned to meet MIL-STD-883 test conditions for Hermeticity and Temperature Cycle.

Features

- 0.5 dB LSB steps to 31.5 dB Attenuation
- Single Control Line Per Bit
- +/-0.3 dB typical Bit Error
- 45 nsec Switching Speed
- CMOS Compatible Control Cirucit
- Hermetically Sealed Module
- Field Replaceable SMA Connectors
- -55°C to +85°C Operating Temperature
- Designed to meet MIL-STD-883 Conditions

Applications

- Military Radio
- Radar
- Electronic Counter Measures
- Space Systems
- Test Instrumentation
- Telecom Infrastructure

Electrical Specifications (Values at 25°C, sea level)

Description	Minimum	Typical	Maximum	Units
Frequency Range	DC		13	GHz
Mean Attenuation Range	0		31.5	dB
Insertion Loss		5.5	6	dB
Input VSWR		1.67:1		
Output VSWR		1.67:1		
Power Rating			+22	dBm
Accuracy of Attenuation			±0.6	dB
Step Size	0.5			dB
Switching Time			45	ns
DC Power Supply			-5 ±10%	Volts

Click the following link (or enter part number in “SEARCH” on website) to obtain additional part information including price, inventory and certifications: 6 Bit TTL Controlled Programmable Attenuator, 31.5 dB Up to 13 GHz, 0.5 dB Steps, SMA Female PE70A4000

Pasternack Enterprises, Inc. • P.O. Box 16759, Irvine, CA 92623
Phone: (866) 727-8376 or (949) 261-1920 • **Fax:** (949) 261-7451
Sales@Pasternack.com • Techsupport@Pasternack.com

© 2019 Pasternack Enterprises All Rights Reserved

PASTERNACK
an INFINITE brand



6 Bit TTL Controlled Programmable Attenuator, 31.5 dB Up to 13 GHz, 0.5 dB Steps, SMA Female

TECHNICAL DATA SHEET PE70A4000

Performance by Frequency

Description		Frequency	Min.	Typ.	Max.	Units
Insertion Loss		DC - 4 GHz		3.2	3.7	dB
		4 - 8 GHz		4.2	4.7	
		8 - 11 GHz		5.0	5.5	
		11 - 13 GHz		5.5	6	
Attenuation Range		DC - 13 GHz		31.5		dB
Return Loss (RF1 & RF2, All Atten. States)		DC - 13 GHz		12		dB
Attenuation Accuracy: (Referenced to Insertion Loss)						
All States		DC - 3 GHz		± (0.2 + 3% of Atten. Setting) Max		dB
0.5 - 27.5 dB		3 - 10 GHz		± (0.4 + 3% of Atten. Setting) Max		dB
28.0 - 31.5 dB		3 - 10 GHz		± (0.4 + 4% of Atten. Setting) Max		dB
All States		10 - 13 GHz		± (0.6 + 10% of Atten. Setting) Max		dB
Input Power for 0.1 dB Compression		1 - 13 GHz		+22		dBm
Input Third Order Intercept Point	RF State	1 - 13 GHz		+46		dBm
(Two-Tone Input Power= 0 dBm Each Tone)	All Other States			+38		dBm
Switching Characteristics						
tRISE, tFALL (10/90% RF)		DC - 13 GHz		22		ns
tON/tOFF (50% CTL to 10/90% RF)				45		ns

Click the following link (or enter part number in “SEARCH” on website) to obtain additional part information including price, inventory and certifications: 6 Bit TTL Controlled Programmable Attenuator, 31.5 dB Up to 13 GHz, 0.5 dB Steps, SMA Female PE70A4000

Pasternack Enterprises, Inc. • P.O. Box 16759, Irvine, CA 92623
Phone: (866) 727-8376 or (949) 261-1920 • **Fax:** (949) 261-7451
Sales@Pasternack.com • Techsupport@Pasternack.com

© 2019 Pasternack Enterprises All Rights Reserved

PASTERNACK
an INFINITE brand



6 Bit TTL Controlled Programmable Attenuator, 31.5 dB Up to 13 GHz, 0.5 dB Steps, SMA Female

TECHNICAL DATA SHEET PE70A4000

Absolute Maximum Rating

Parameter	Rating	Units
RF input Power	+25	dBm
Control Voltage	-0.5 to +5.5	Vdc
Bias Voltage	-7	Vdc
Thermal Resistance	346°	C/W
Operating Temperature	-55° to +85°	C
Storage Temperature	-65° to +150°	C



ESD Sensitive Material, Transport material in Approved ESD bags. Handle only in approved ESD Workstation.

Mechanical Specifications

Size

Length	1.035 in [26.29 mm]
Width	0.68 in [17.27 mm]
Height	0.36 in [9.14 mm]
Weight	0.08 lbs [36.29 g]
Connector 1	SMA Female
Connector 2	SMA Female

Environmental Specifications

Temperature

Operating Range	-55 to +85 deg C

Compliance Certifications (see product page for current document)

Plotted and Other Data

Notes:

Click the following link (or enter part number in “SEARCH” on website) to obtain additional part information including price, inventory and certifications: 6 Bit TTL Controlled Programmable Attenuator, 31.5 dB Up to 13 GHz, 0.5 dB Steps, SMA Female PE70A4000

Pasternack Enterprises, Inc. • P.O. Box 16759, Irvine, CA 92623
Phone: (866) 727-8376 or (949) 261-1920 • **Fax:** (949) 261-7451
Sales@Pasternack.com • Techsupport@Pasternack.com

© 2019 Pasternack Enterprises All Rights Reserved



6 Bit TTL Controlled Programmable Attenuator, 31.5 dB Up to 13 GHz, 0.5 dB Steps, SMA Female

TECHNICAL DATA SHEET PE70A4000

Functional Block Diagram

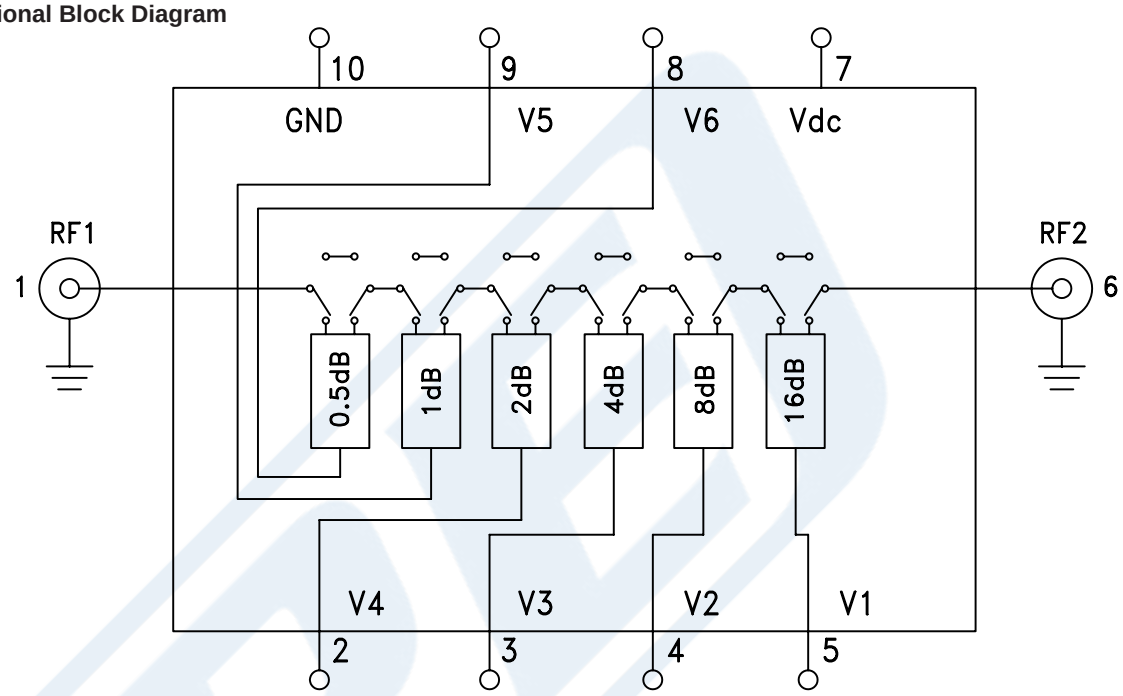

Click the following link (or enter part number in “SEARCH” on website) to obtain additional part information including price, inventory and certifications: 6 Bit TTL Controlled Programmable Attenuator, 31.5 dB Up to 13 GHz, 0.5 dB Steps, SMA Female PE70A4000

Pasternack Enterprises, Inc. • P.O. Box 16759, Irvine, CA 92623
Phone: (866) 727-8376 or (949) 261-1920 • **Fax:** (949) 261-7451
Sales@Pasternack.com • Techsupport@Pasternack.com

© 2019 Pasternack Enterprises All Rights Reserved



6 Bit TTL Controlled Programmable Attenuator, 31.5 dB Up to 13 GHz, 0.5 dB Steps, SMA Female

TECHNICAL DATA SHEET PE70A4000

Performance Data

Normalized Attenuation *(Only Major States are Shown)*

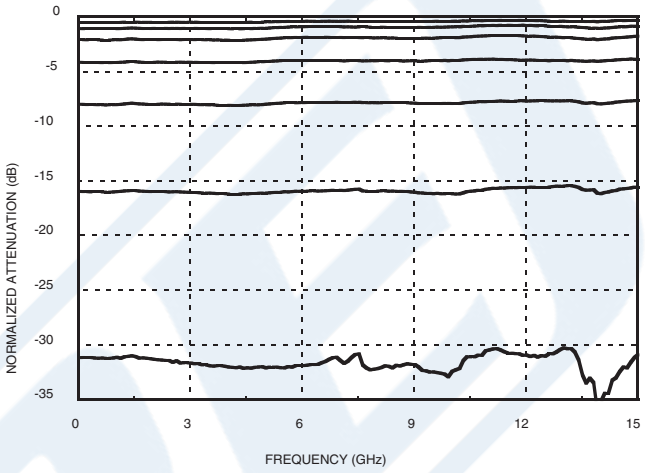

Relative Phase vs. Frequency *(Only Major States are Shown)*

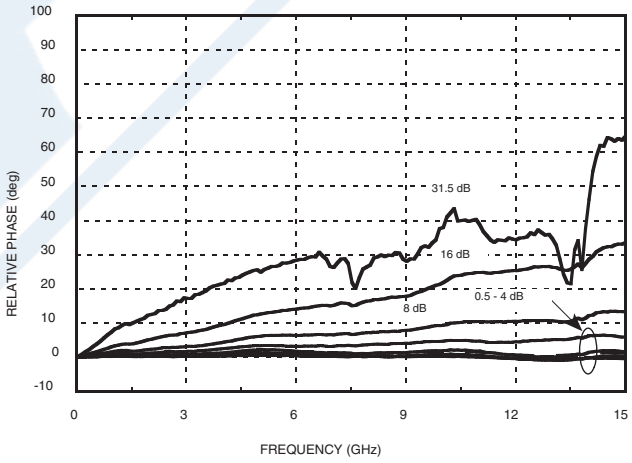

Click the following link (or enter part number in “SEARCH” on website) to obtain additional part information including price, inventory and certifications: 6 Bit TTL Controlled Programmable Attenuator, 31.5 dB Up to 13 GHz, 0.5 dB Steps, SMA Female PE70A4000

Pasternack Enterprises, Inc. • P.O. Box 16759, Irvine, CA 92623
Phone: (866) 727-8376 or (949) 261-1920 • **Fax:** (949) 261-7451
Sales@Pasternack.com • Techsupport@Pasternack.com

© 2019 Pasternack Enterprises All Rights Reserved



6 Bit TTL Controlled Programmable Attenuator, 31.5 dB Up to 13 GHz, 0.5 dB Steps, SMA Female

TECHNICAL DATA SHEET PE70A4000

Insertion Loss

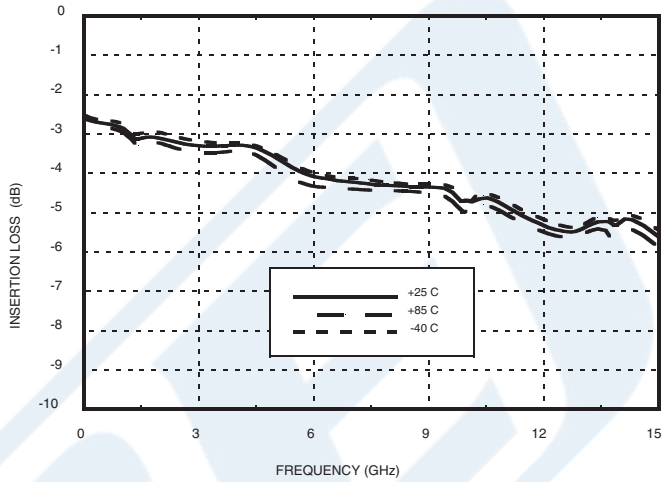

Return Loss RF1, RF2

(Only Major States are Shown)

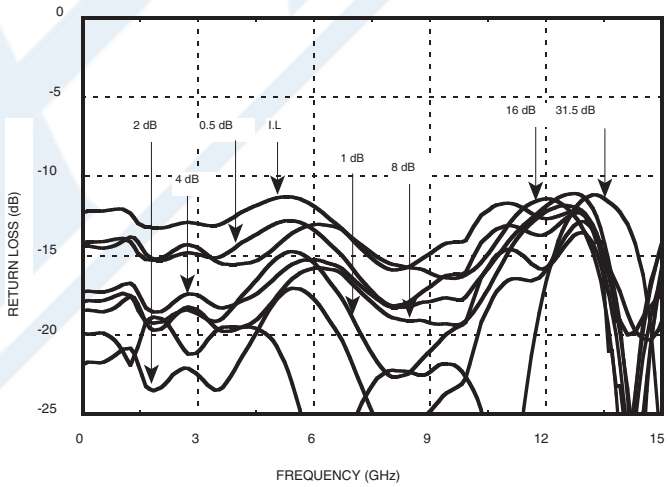

Click the following link (or enter part number in “SEARCH” on website) to obtain additional part information including price, inventory and certifications: 6 Bit TTL Controlled Programmable Attenuator, 31.5 dB Up to 13 GHz, 0.5 dB Steps, SMA Female PE70A4000

Pasternack Enterprises, Inc. • P.O. Box 16759, Irvine, CA 92623
Phone: (866) 727-8376 or (949) 261-1920 • **Fax:** (949) 261-7451
Sales@Pasternack.com • Techsupport@Pasternack.com

© 2019 Pasternack Enterprises All Rights Reserved



6 Bit TTL Controlled Programmable Attenuator, 31.5 dB Up to 13 GHz, 0.5 dB Steps, SMA Female

Bit Error vs. Attenuation State

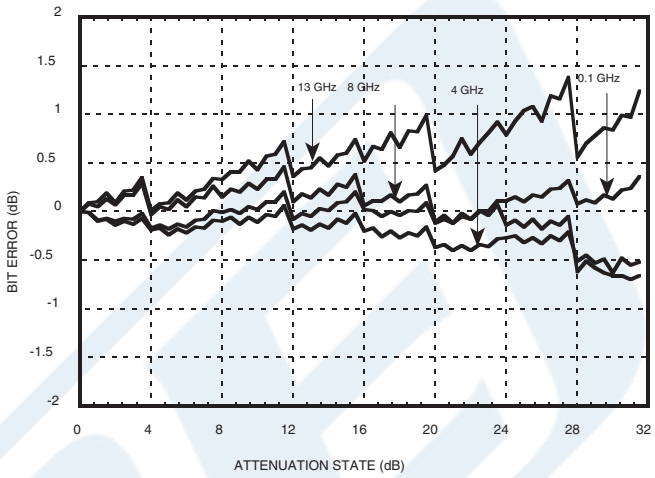

Bit Error vs. Frequency *(Only Major States are Shown)*

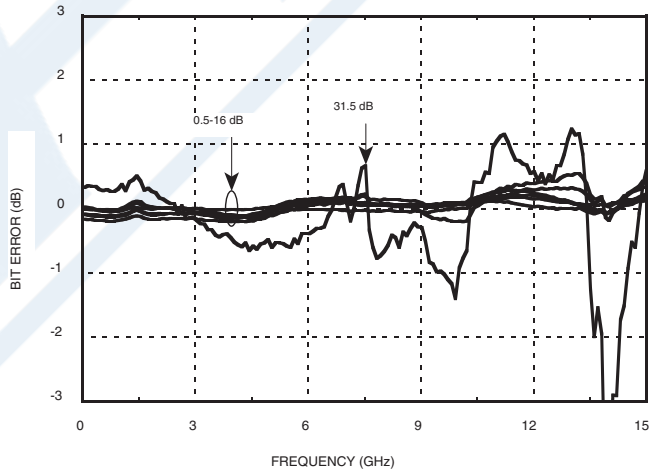

Click the following link (or enter part number in “SEARCH” on website) to obtain additional part information including price, inventory and certifications: 6 Bit TTL Controlled Programmable Attenuator, 31.5 dB Up to 13 GHz, 0.5 dB Steps, SMA Female PE70A4000

Pasternack Enterprises, Inc. • P.O. Box 16759, Irvine, CA 92623
Phone: (866) 727-8376 or (949) 261-1920 • **Fax:** (949) 261-7451
Sales@Pasternack.com • Techsupport@Pasternack.com

© 2019 Pasternack Enterprises All Rights Reserved



6 Bit TTL Controlled Programmable Attenuator, 31.5 dB Up to 13 GHz, 0.5 dB Steps, SMA Female

Worst Case Step Error Between Successive Attenuation States

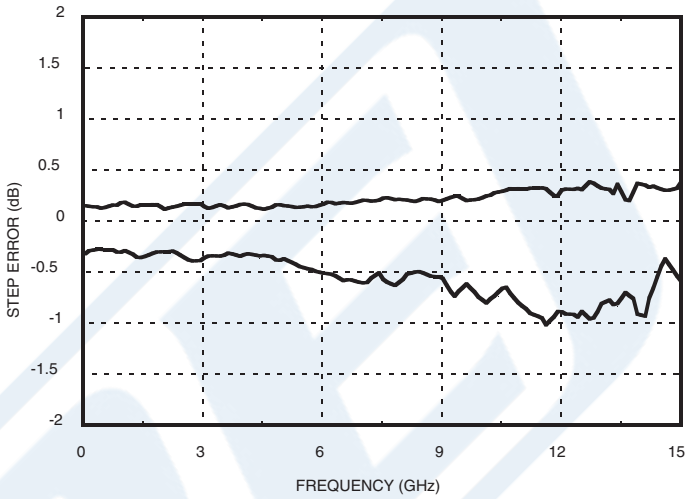

Bias Voltage & Current

Vdc Range = -5V ± 10%		
V	I (Typ.) (mA)	I (Max.) (mA)
-5.0	5	9

(Bias current increases with switching rate to 15 - 20 mA)

Control Voltage (CMOS Compatible)

State	Bias Condition
Low	0 to +1.5V @ 5 µA Typ.
High	+3.5 to +5V @ 800 µA Typ.

Click the following link (or enter part number in “SEARCH” on website) to obtain additional part information including price, inventory and certifications: 6 Bit TTL Controlled Programmable Attenuator, 31.5 dB Up to 13 GHz, 0.5 dB Steps, SMA Female PE70A4000

Pasternack Enterprises, Inc. • P.O. Box 16759, Irvine, CA 92623
Phone: (866) 727-8376 or (949) 261-1920 • **Fax:** (949) 261-7451
Sales@Pasternack.com • Techsupport@Pasternack.com

© 2019 Pasternack Enterprises All Rights Reserved

PASTERNACK
an INFINITE brand



6 Bit TTL Controlled Programmable Attenuator, 31.5 dB Up to 13 GHz, 0.5 dB Steps, SMA Female

TECHNICAL DATA SHEET PE70A4000

6 Bit TTL Controlled Programmable Attenuator, 31.5 dB Up to 13 GHz, 0.5 dB Steps, SMA Female from Pasternack Enterprises has same day shipment for domestic and International orders. Our RF, microwave and millimeter wave products maintain a 99.4% availability and are part of the broadest selection in the industry.

Click the following link (or enter part number in “SEARCH” on website) to obtain additional part information including price, inventory and certifications: 6 Bit TTL Controlled Programmable Attenuator, 31.5 dB Up to 13 GHz, 0.5 dB Steps, SMA Female PE70A4000

URL: https://www.pasternack.com/31.5db-programmable-sma-female-sma-female-0-watts-attenuator-pe70a4000-p.aspx

The information contained in this document is accurate to the best of our knowledge and representative of the part described herein. It may be necessary to make modifications to the part and/or the documentation of the part, in order to implement improvements. Pasternack reserves the right to make such changes as required. Unless otherwise stated, all specifications are nominal. Pasternack does not make any representation or warranty regarding the suitability of the part described herein for any particular purpose, and Pasternack does not assume any liability arising out of the use of any part or documentation.

Pasternack Enterprises, Inc. • P.O. Box 16759, Irvine, CA 92623
Phone: (866) 727-8376 or (949) 261-1920 • **Fax:** (949) 261-7451
Sales@Pasternack.com • Techsupport@Pasternack.com

© 2019 Pasternack Enterprises All Rights Reserved

PE70A4000 CAD Drawing

6 Bit TTL Controlled Programmable Attenuator, 31.5 dB
Up to 13 GHz, 0.5 dB Steps, SMA Female

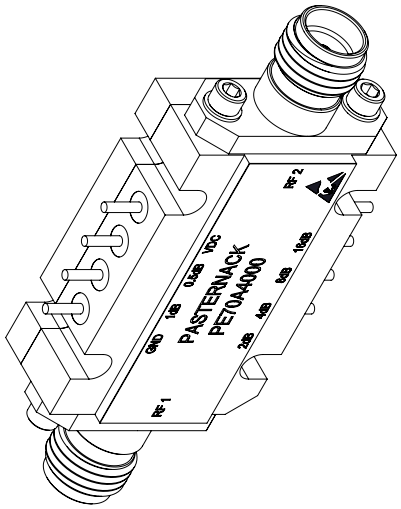

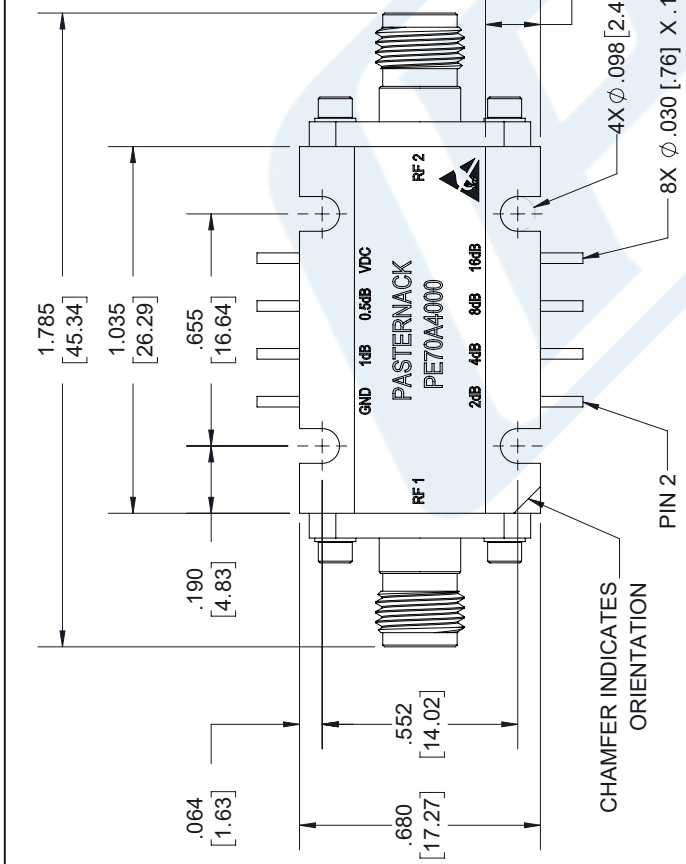

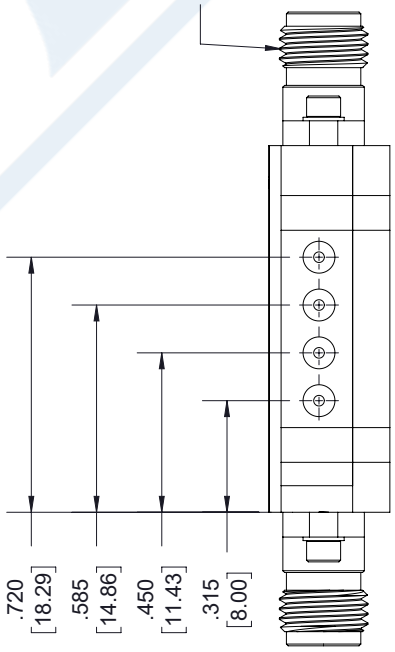

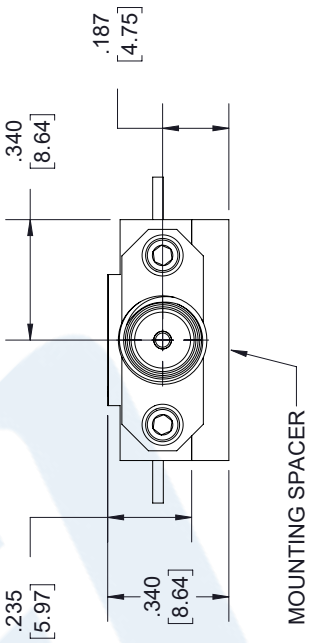

REVISIONS

REV.	DESCRIPTION	DATE	APPROVED
1.1	PCR PE70A4000 20190613	06/26/19	J.GARCIA

UNLESS OTHERWISE SPECIFIED
LEADING DIMENSIONS ARE INCHES
DIMENSIONS IN [ ] ARE MILLIMETERS
TOLERANCES:
.X= ± .2 [5.08] | FRACTIONS ± 1/32
.XX= ± .01 [.25] | ANGLES ± 1°
.XXX= ± .005 [.13]
ALL DIMENSIONS SHOWN ARE FOR REFERENCE ONLY.
THIRD-ANGLE PROJECTION

PASTERNACK
an INFINITE brand
Pasternack Enterprises, Inc.
P.O.Box 16759, Irvine, CA 92623.
Phone: 1.949.261.1920 | 1.866.727.8376
Fax: 1.949.261.7451
www.pasternack.com | e-mail: sales@pasternack.com

SIZE	CAGE	DRAWN BY	PART NUMBER	REV
A	53919	K.DANG	PE70A4000	1.1

SHEET 1 OF 2
SCALE N/A

THE INFORMATION AND DESIGN IN THIS DOCUMENT IS THE PROPERTY OF PASTERNACK CORPORATION. ALL RIGHTS RESERVED.

THESE COMMODITIES, TECHNOLOGY OR SOFTWARE WERE EXPORTED FROM THE UNITED STATES IN ACCORDANCE WITH THE EXPORT ADMINISTRATION REGULATIONS. DIVERSION CONTRARY TO U.S. LAW PROHIBITED.

T-Rev.B

© 2019 Pasternack Enterprises All Rights Reserved

© 2019 Pasternack Enterprises All Rights Reserved

Pin Description

Pin Number	Function	Description	Interface Schematic
1	RF1	This pin is DC coupled and matched to 50 Ohms. Blocking capacitors are required if RF line potential is not equal to 0 Vdc.	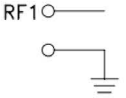
5, 4, 3, 2, 9, 8	V1 - V6	See truth table and control voltage table.	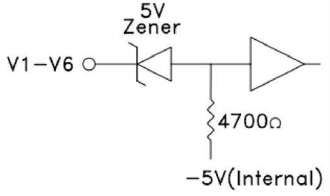
6	RF2	This pin is DC coupled and matched to 50 Ohms. Blocking capacitors are required if RF line potential is not equal to 0 Vdc.	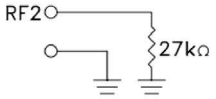
7	Vdc	Supply voltage: -5 Vdc ±10%.	
10	GND	Power Supply Ground	

Truth Table

Control Voltage Input						Attenuation State RF1 - RF2
V1 16 dB	V2 8 dB	V3 4 dB	V4 2 dB	V5 1 dB	V6 0.5 dB	
Low	Low	Low	Low	Low	Low	Reference I.L.
Low	Low	Low	Low	Low	High	0.5 dB
Low	Low	Low	Low	High	Low	1 dB
Low	Low	Low	High	Low	Low	2 dB
Low	Low	High	Low	Low	Low	4 dB
Low	High	Low	Low	Low	Low	8 dB
High	Low	Low	Low	Low	Low	16 dB
High	High	High	High	High	High	31.5 dB
Any combination of the above states will provide an attenuation approximately equal to the sum of the bits selected.						

THESE COMMODITIES, TECHNOLOGY OR SOFTWARE WERE EXPORTED FROM THE UNITED STATES IN ACCORDANCE WITH THE EXPORT ADMINISTRATION REGULATIONS. DIVERSION CONTRARY TO U.S. LAW PROHIBITED.

UNLESS OTHERWISE SPECIFIED
LEADING DIMENSIONS ARE INCHES
DIMENSIONS IN [ ] ARE MILLIMETERS

TOLERANCES:
.X=± .2 [5.08] | FRACTIONS ± 1/32
.XX=± .01 [.25] | ANGLES ± 1°
.XXX=± .005 [.13]

ALL DIMENSIONS SHOWN ARE FOR REFERENCE ONLY.

THIRD-ANGLE PROJECTION

PASTERNACK® THE ENGINEER'S RF SOURCE
PASTERNACK ENTERPRISES, INC.
P.O.BOX 16759, IRVINE, CA 92623
Phone: 1.949.261.1920 | 1.866.727.8376
Fax: 1.949.261.7451
www.pasternack.com | e-mail: sales@pasternack.com

THE INFORMATION AND DESIGN IN THIS DOCUMENT IS THE PROPERTY OF PASTERNACK CORPORATION. ALL RIGHTS RESERVED.

SHEET	OF
2	2

SCALE: N/A

SIZE	CAGE	DRAWN BY	PART NUMBER	REV
A	53919	K.DANG	PE70A4000	1.1

PE70A4000 CAD Drawing

6 Bit TTL Controlled Programmable Attenuator, 31.5 dB
Up to 13 GHz, 0.5 dB Steps, SMA Female

T-Rev.A