PASTERNACK
an INFINITE brand

3 dB Fixed Attenuator, SMA Male to SMA Female Black Anodized Aluminum Body Rated to 10 Watts Up to 12.4 GHz



RF Fixed Attenuators Technical Data Sheet PE7463-3

Features

- DC to 12.4 GHz Frequency Range
- SMA Connectorized Design
- Attenuation 3 dB ±0.6 dB
- Max Power 10 Watts (CW)
- Max VSWR of 1.3:1

Applications

- Instrumentation
- Precision Measurements
- Prototyping and Characterization
- Production Systems
- WIFI 6E
- 5G Cellular Bands

Description

Pasternack carries a wide range of fixed attenuators with a broad selection of attenuation levels, frequency ranges, and power dissipation ranges. RF microwave attenuators (also known as RF pads) lower the amplitude of a signal (attenuate) a known amount and can be used in a wide variety of applications. These attenuator pads are used when a signal needs to be reduced to protect measurement equipment or other circuitry, to extend the range of power meters and amplifiers, and to impedance match circuits by reducing the VSWR seen by adjacent components. RF attenuators can prevent signal overload in amplifiers, receivers and detectors, adjusting the signal level to a range that is optimal.

Few RF components are as commonly used as fixed coaxial attenuators, and Pasternack carries one of the largest in-stock varieties and ships them same day. The 3 dB Fixed Attenuator PE7463-3 is rated to 10 Watts and operates from DC to 12.4 GHz. The versatile coaxial package uses SMA male to SMA female connectors and is also REACH compliant.

Electrical Specifications

Description	Minimum	Typical	Maximum	Units
Frequency Range	DC		12.4	GHz
Impedance		50		Ohms
Nominal Attenuation		3		dB
Attenuation Accuracy		0.6		dB
VSWR			1.3:1	
Input Power, CW Derated linearly to 1W at 125°C			10	Watts
Input Power, Peak 5 µs pulse, 2% Duty Cycle			500	Watts

Click the following link (or enter part number in “SEARCH” on website) to obtain additional part information including price, inventory and certifications: 3 dB Fixed Attenuator, SMA Male to SMA Female Black Anodized Aluminum Body Rated to 10 Watts Up to 12.4 GHz PE7463-3

Pasternack Enterprises, Inc. • P.O. Box 16759, Irvine, CA 92623
Phone: (866) 727-8376 or (949) 261-1920 • **Fax:** (949) 261-7451
Sales@Pasternack.com • Techsupport@Pasternack.com

© 2020 Pasternack Enterprises All Rights Reserved

PASTERNACK
an INFINITE brand

3 dB Fixed Attenuator, SMA Male to SMA Female Black Anodized Aluminum Body Rated to 10 Watts Up to 12.4 GHz



RF Fixed Attenuators Technical Data Sheet PE7463-3

Mechanical Specifications

Size

Length	1.89 in [48.01 mm]
Width/Diameter	0.65 in [16.51 mm]
Height	0.65 in [16.51 mm]
Weight	0.02 lbs [9.07 g]
Body Material and Plating	Black Anodized Aluminum

Configuration

Design	Fixed, Bidirectional

Connectors

Description	Connector 1	Connector 2
Type	SMA Male	SMA Female
Contact Material and Plating	Brass, Gold	Beryllium Copper, Gold
Body Material and Plating	Brass, Nickel	Brass, Nickel

Environmental Specifications

Temperature

Operating Range	-55 to +125 deg C

Compliance Certifications (see product page for current document)

Plotted and Other Data

Notes:

3 dB Fixed Attenuator, SMA Male to SMA Female Black Anodized Aluminum Body Rated to 10 Watts Up to 12.4 GHz from Pasternack Enterprises has same day shipment for domestic and International orders. Our RF, microwave and millimeter wave products maintain a 99.4% availability and are part of the broadest selection in the industry.

Click the following link (or enter part number in “SEARCH” on website) to obtain additional part information including price, inventory and certifications: 3 dB Fixed Attenuator, SMA Male to SMA Female Black Anodized Aluminum Body Rated to 10 Watts Up to 12.4 GHz PE7463-3

URL: https://www.pasternack.com/3db-fixed-sma-male-sma-female-10-watts-attenuator-pe7463-3-p.aspx

Pasternack Enterprises, Inc. • P.O. Box 16759, Irvine, CA 92623
Phone: (866) 727-8376 or (949) 261-1920 • **Fax:** (949) 261-7451
Sales@Pasternack.com • Techsupport@Pasternack.com

© 2020 Pasternack Enterprises All Rights Reserved

PE7463-3 CAD Drawing

3 dB Fixed Attenuator, SMA Male to SMA Female Black Anodized
Aluminum Body Rated to 10 Watts Up to 12.4 GHz

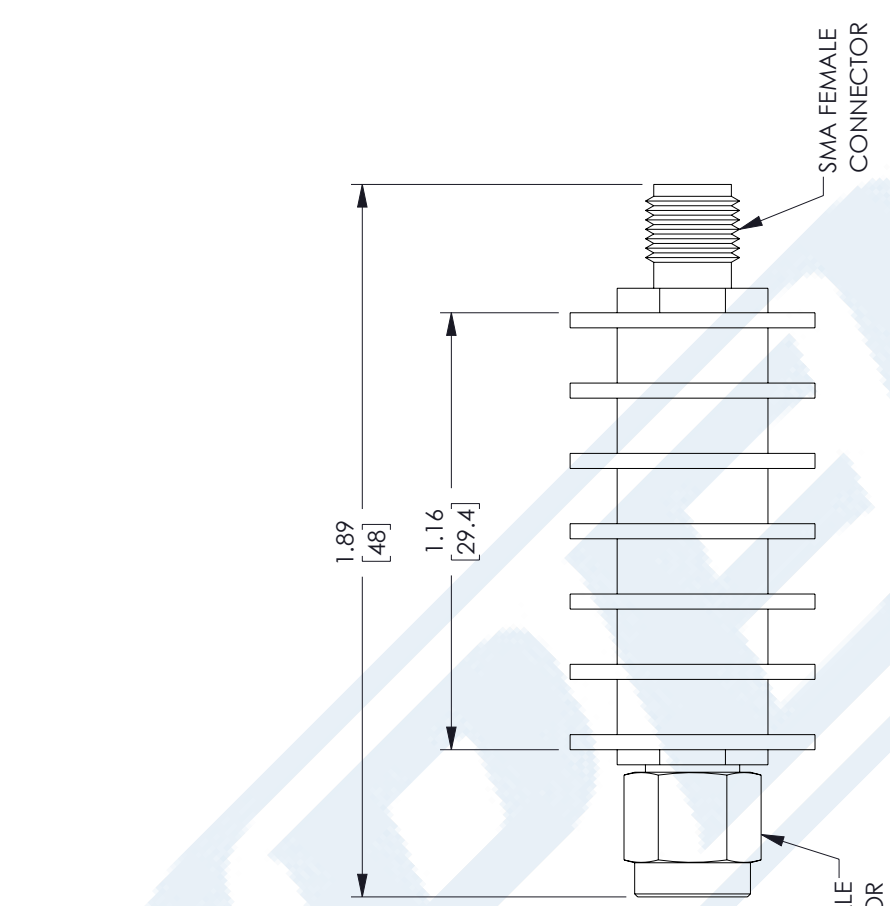

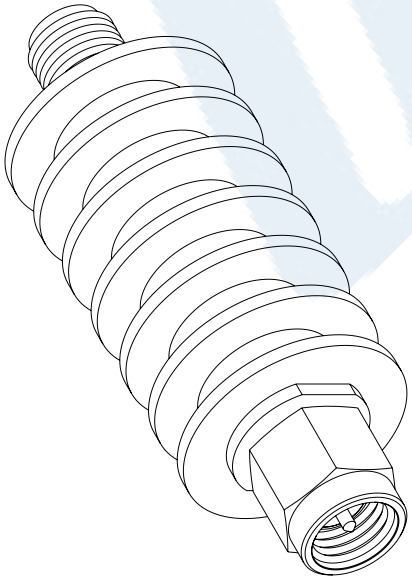

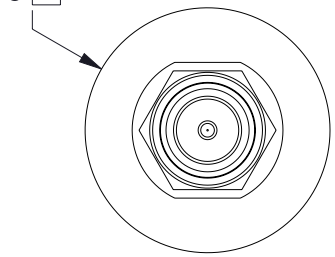

REVISION				
ZONE	REV.	DESCRIPTION	DATE	CHANGED BY	APPROVED BY
	A	INITIAL RELEASE	01/27/2023	DMAY	SPONG

UNLESS OTHERWISE SPECIFIED
LEADING DIMENSIONS ARE INCHES
DIMENSIONS IN [ ] ARE MILLIMETERS

TOLERANCES:

.X = ± .2 [5]	FRACTIONS ± 1/32
.XX = ± .02 [.5]	ANGLES ± 1°
.XXX = ± .005 [.13]	

CABLE LENGTH TOLERANCES:

>12 [305] ≤ +1 [25] / -0
>12 [305] ≤ 60 [1524] = +2 [51] / -0
>60 [1524] ≤ 120 [3048] = +4 [102] / -0
>120 [3048] ≤ 300 [7620] = +6 [152] / -0
>300 [7620] = +5% / -0

ALL DIMENSIONS ARE FOR REFERENCE ONLY
AND SUBJECT TO CHANGE WITHOUT NOTICE.

PASTERNACK
an INFINITE brand

Website: www.Pasternack.com
Phone: 1.866.727.8376 | 1.949.261.1920

INTERPRET ALL DIMENSIONS AND TOLERANCES PER ASME Y14.5

SCALE	SHEET
NONE	1 OF 1

DESCRIPTION
3 dB FIXED ATTENUATOR, SMA MALE TO SMA FEMALE, BLACK ANODIZE ALUMINUM BODY RATED TO 10 WATTS UP TO 12.4 GHz

SIZE	CAGE CODE	DRAWN BY	ITEM NO.	REV
A	53919	DMAY	PE7463-3	A

THE INFORMATION CONTAINED IN THIS DRAWING IS THE SOLE PROPERTY OF INFINITE ELECTRONICS, INC. ANY REPRODUCTION IN PART OR WHOLE WITHOUT THE WRITTEN PERMISSION OF INFINITE ELECTRONICS, INC. IS PROHIBITED.
THESE COMMODITIES, TECHNOLOGY OR SOFTWARE WERE EXPORTED FROM THE UNITED STATES IN ACCORDANCE WITH THE EXPORT ADMINISTRATION REGULATIONS. DIVERSION CONTRARY TO U.S. LAW PROHIBITED.

T-Rev.D