Interchangeable Clips for the F-Series Folding Prong Wall Adapters

FPB-H – Brazil Clip

Dimension Drawing Unit: mm



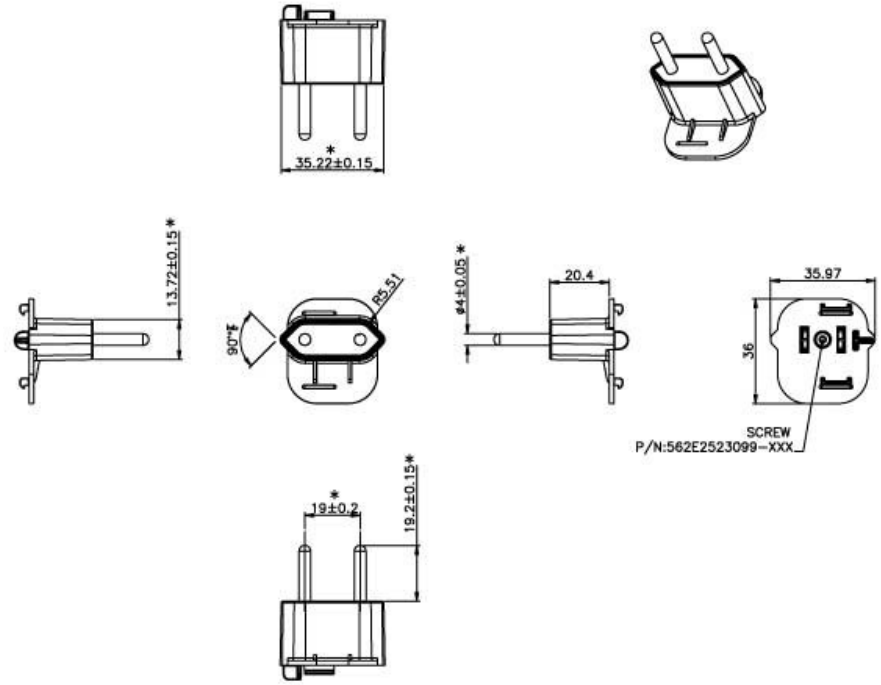

FPC-H – China Clip - Discontinued

Recommended model(s): PSA10FC-050-R or PSA10F-050Q-R

Dimension Drawing Unit: mm



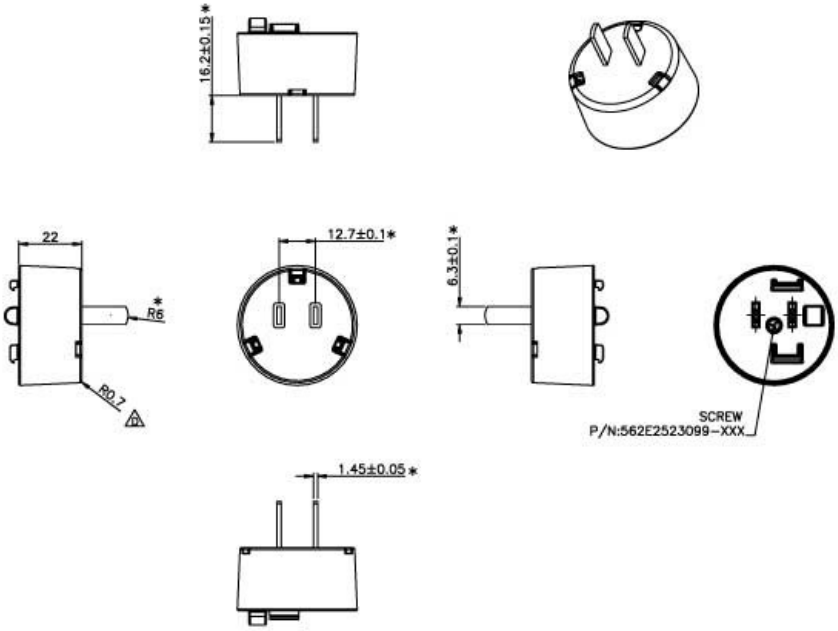

Phihong is not responsible for any error and reserves the right to make changes without notice. Please visit our website at www.phihong.com for the most up-to-date specifications and contact information. Revision 1/30/2020

FPE-H – European Clip Dimension Drawing Unit: mm

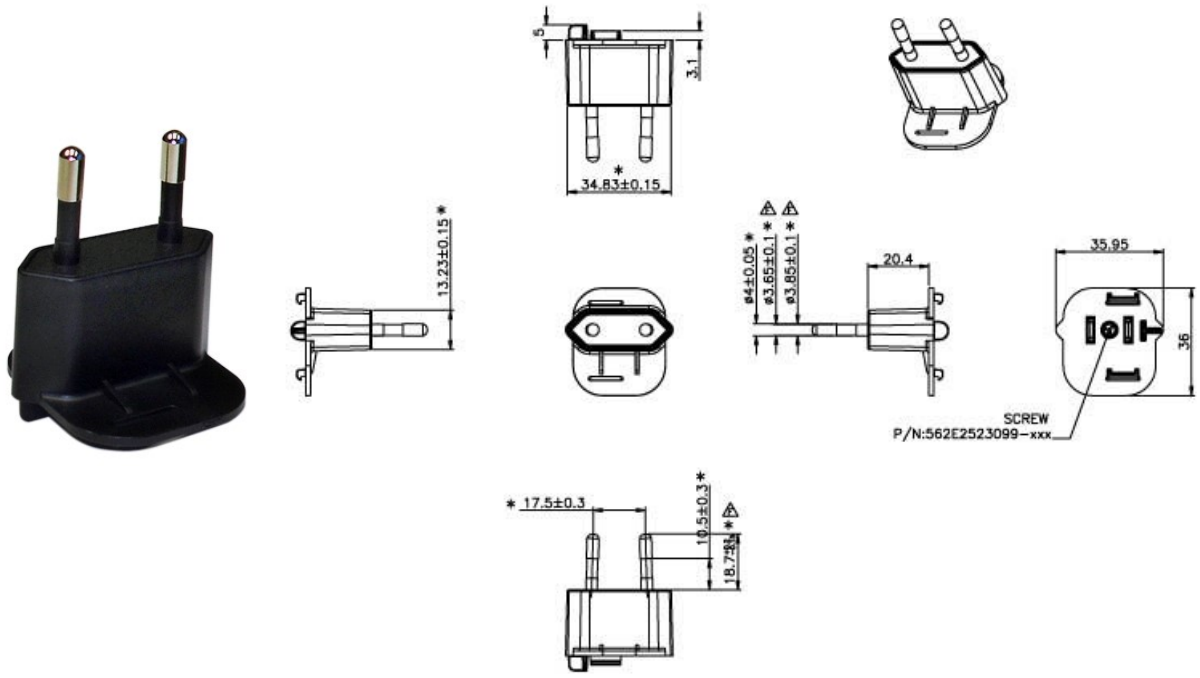

FPH-H – Korea Clip Dimension Drawing Unit: mm

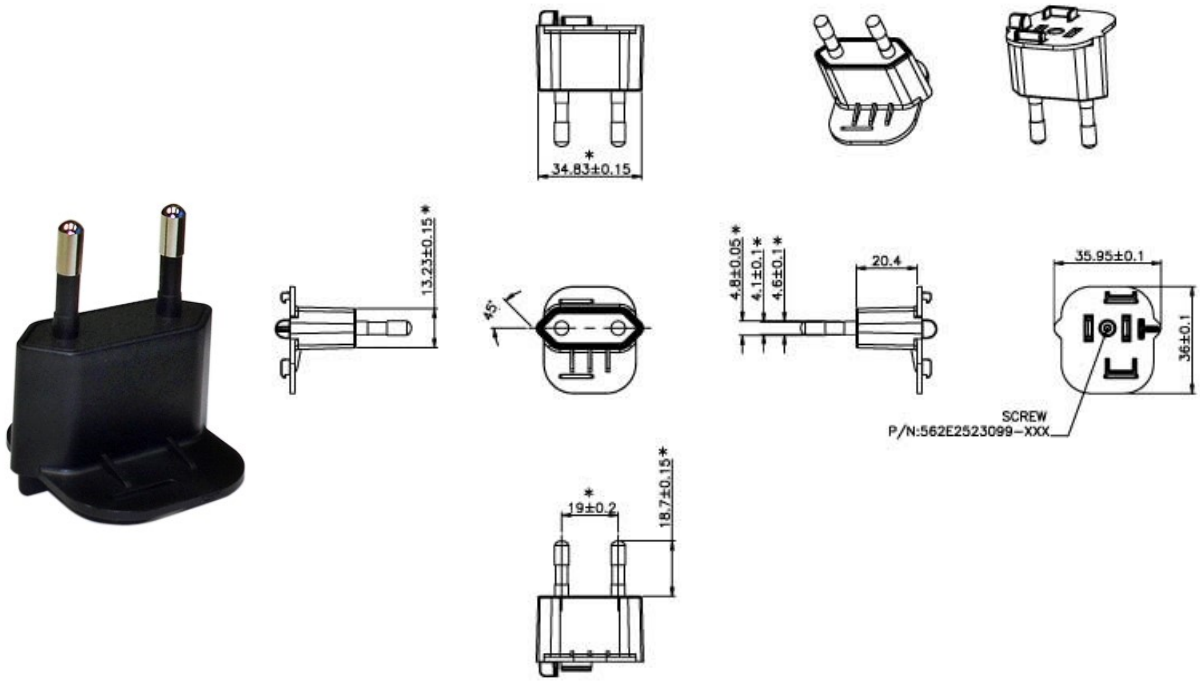

Phihong is not responsible for any error and reserves the right to make changes without notice. Please visit our website at www.phihong.com for the most up-to-date specifications and contact information. Revision 1/30/2020

FPI-H – India Clip

Dimension Drawing Unit: mm

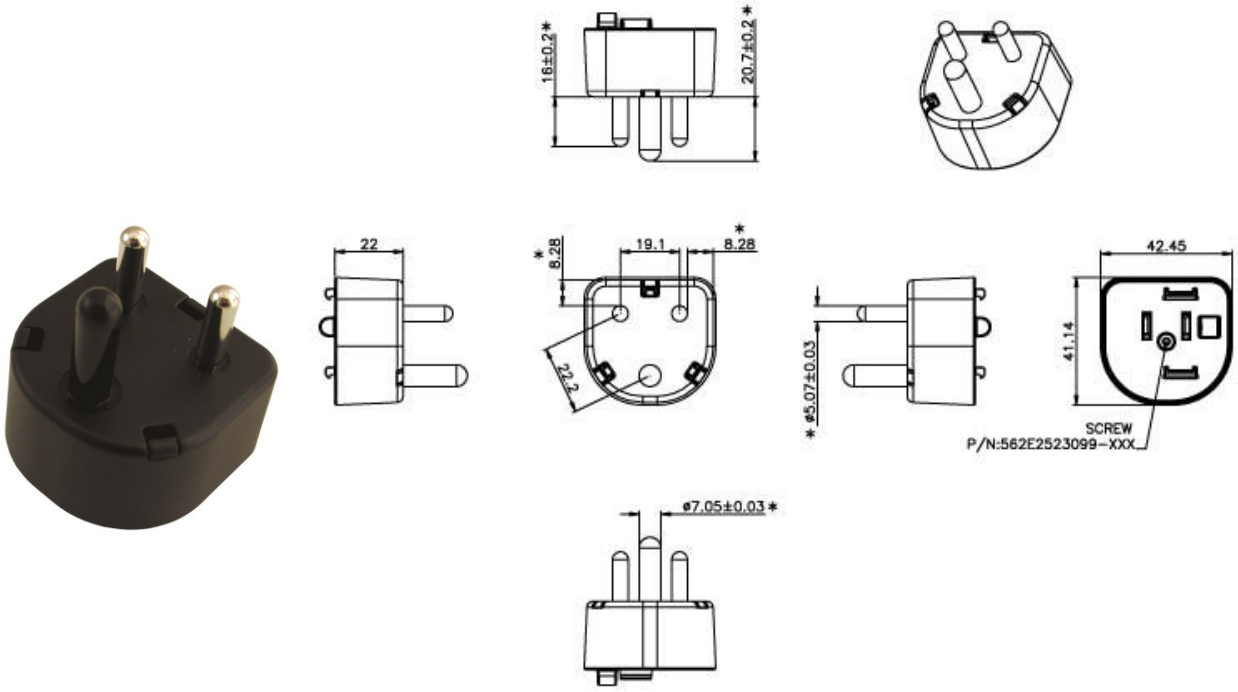

FPK-H – UK Clip

Dimension Drawing Unit: mm

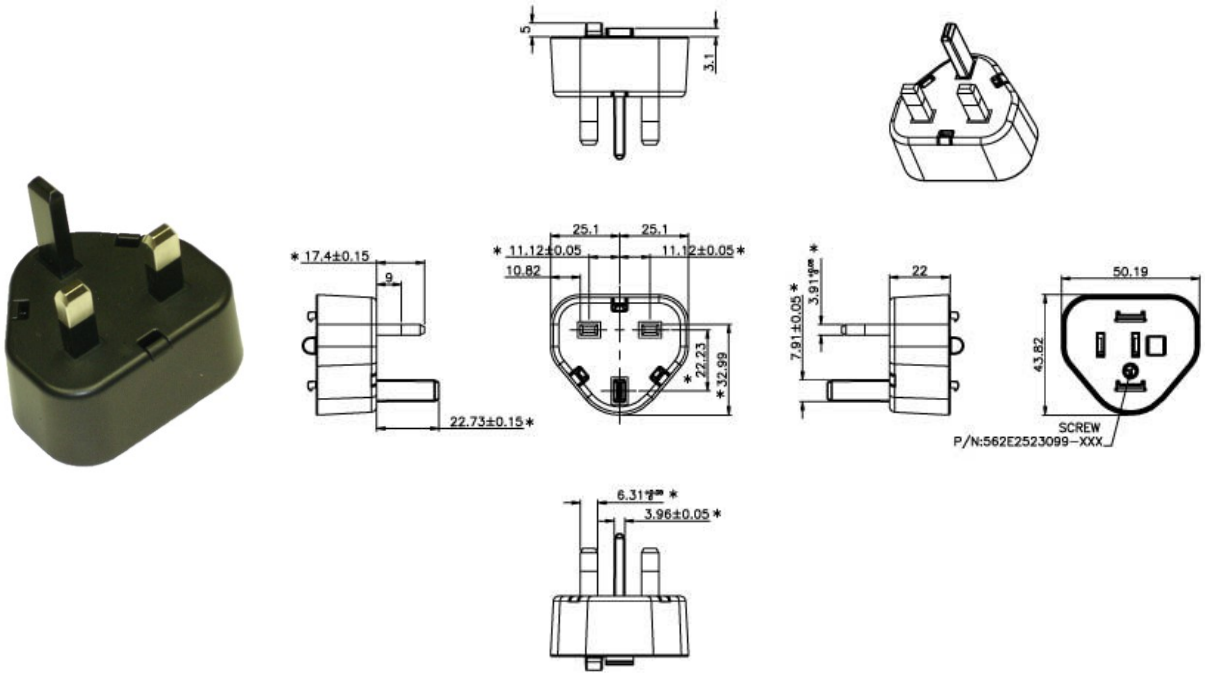

Phihong is not responsible for any error and reserves the right to make changes without notice. Please visit our website at www.phihong.com for the most up-to-date specifications and contact information. Revision 1/30/2020

FPN-H – Argentina Clip

Dimension Drawing Unit: mm

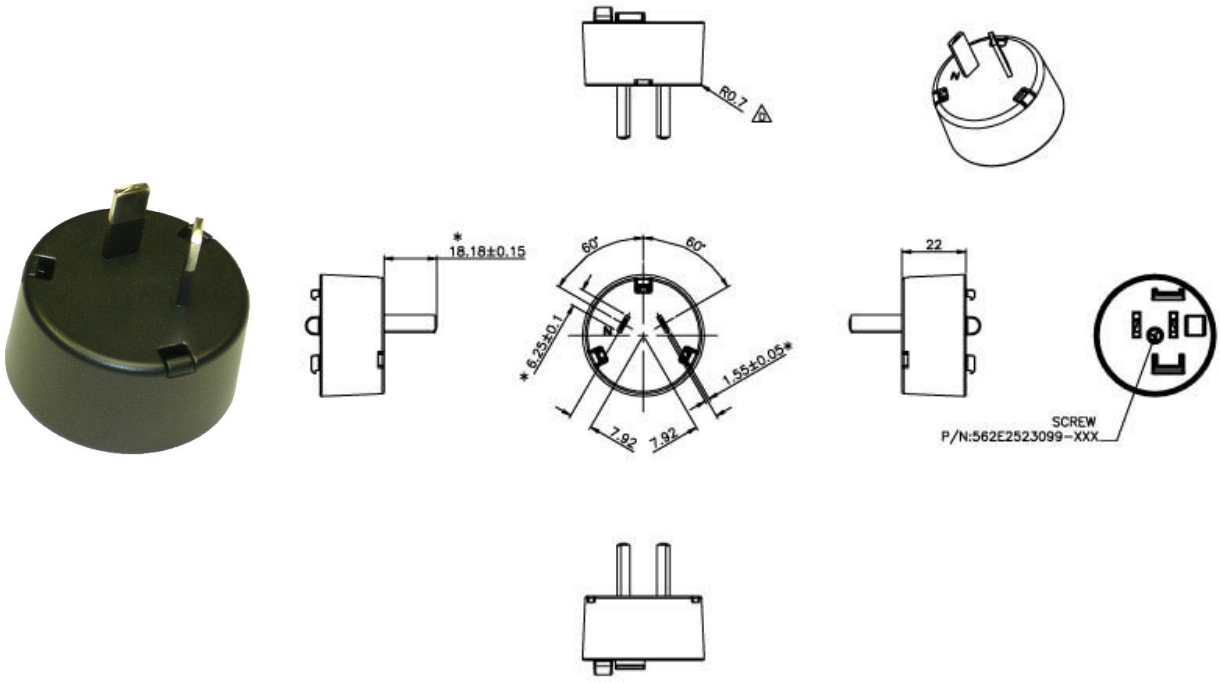

FPS-H – Australia Clip

Dimension Drawing Unit: mm

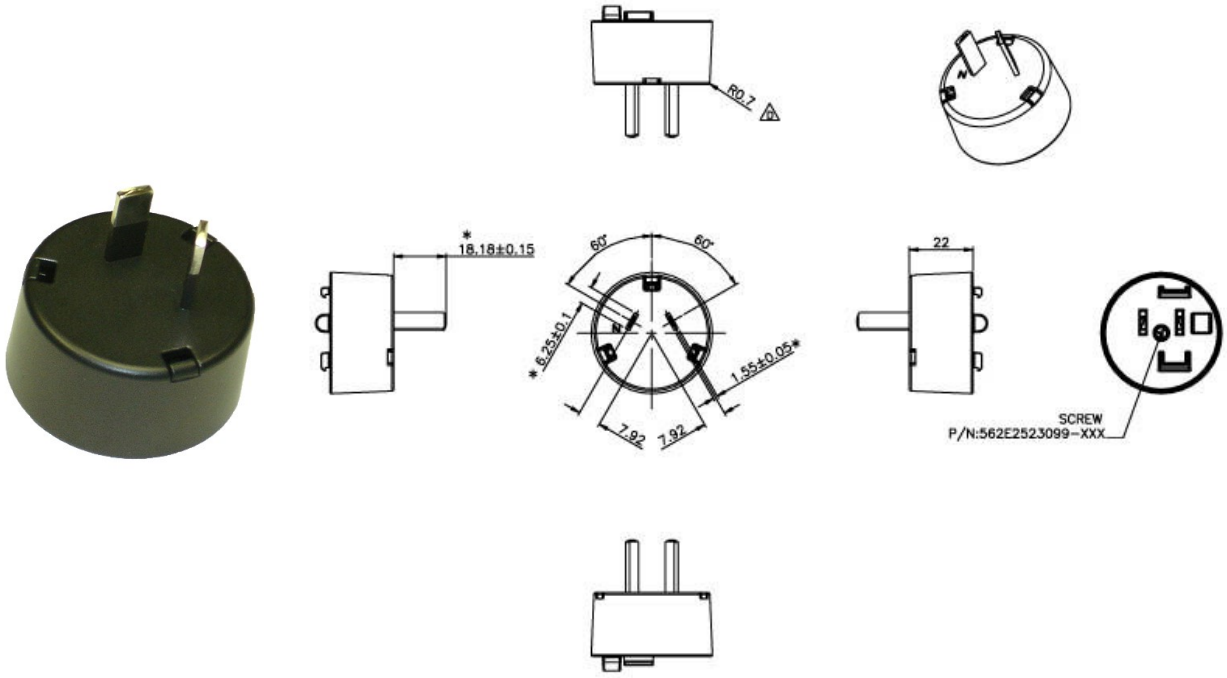

Phihong is not responsible for any error and reserves the right to make changes without notice. Please visit our website at www.phihong.com for the most up-to-date specifications and contact information. Revision 1/30/2020