PHIHONG USA CORP

PYA10T050200

10W 5V Interchangeable Plug Wall Mount Adapter



Features

- Interchangeable US/EU/UK/AU Plugs (sold separately)
- US DoE Level VI Efficiency Compliance
- EU Ecodesign 2019/1782 Compliance
- CoC Version 5 Tier 2 Compliance
- Load Regulation: +/-5%
- Meets FCC and EN55032 Class B Emissions
- Over-Voltage, Over-Current and Short Circuit Protection

Applications

- Telecommunication
- Electronic Devices
- Set-top Devices
- Office Equipment
- Smart Home Devices

Description

Phihong PYA10T050200 10-watt 5-volt wall adapter with interchangeable plugs is a versatile and efficient power solution designed to meet the needs of a wide range of electronic devices. One of the key features of this adapter is its ability to accommodate various field changeable plug types, including US, EU, UK, and AU plugs. This versatility allows users to easily adapt the adapter to different electrical systems and socket configurations, eliminating the need for multiple adapters or converters when traveling to different countries.

The adapter meets Level VI and EU Ecodesign 2019/1782 efficiency limits as well as those of Level VII limits proposed by the US Department of Energy in 2023 and voluntary Code of Conduct Version 5 Tier 2 limits.

Phihong, a reputable manufacturer known for its high-quality power solutions, ensures that this adapter meets stringent safety standards. Built-in protection mechanisms such as over-voltage protection, over-current protection, and short-circuit protection safeguard your device against potential damage, providing peace of mind to users.

Phihong is not responsible for any error and reserves the right to make changes without notice. Please visit our website at www.phihong.com for the most up-to-date specifications and contact information. Revised 1/7/2025

PYA10T050200

PHIHONG

Specifications[1]

Model		PYA10T050200
Output	DC Output Voltage	5V
	Max Current	2.0A
	Output Power	10.0W
	Regulation	± 1% Line / ± 5% Load
	Ripple & Noise P-P(max)[2]	100mV
Input	AC Input Voltage Range	90 to 264VAC
	AC Input Frequency	47 to 63Hz
	AC Input Current	0.4A max. @ input 100-240VAC, full load
	AC Inrush Current	40A max. @ input 240VAC
	No Load Power Consumption at 115VAC Input	≤ 0.075W
	No Load Power Consumption at 230VAC Input	≤ 0.075W
	115VAC Average Efficiency[3]	≥ 79.0%
	230VAC Average Efficiency[3]	≥ 79.0%
	230VAC 10% Load Efficiency[3]	≥ 69.7%
	Leakage Current	0.25mA max. at 264VAC/50Hz max., no load
Protection	Over-Voltage	15V max
	Short Circuit	Auto-recovery and no damage.
	Over-Current	4.0A max, auto-recovery
Environmental	Operating Temperature	0ºC to +40ºC
	Non-Operating Temperature	-20ºC to +70ºC
	Operating Humidity	10% to 95% RH max
Safety Approvals and EMC	Dielectric Withstand (HI-POT)	Primary to Secondary: 3000VAC, 10mA max. 1 min.
	Insulation Resistance	Primary to Secondary: Min. 50M OHM at 500 VDC
	Standards	cULus 62368-1, IEC 62368-1, AS/NZS 62368.1
	EMI Emissions	FCC Part 15 Class B, CAN ICES-003(B)/NMB-003(B), CISPR 32 Class B Conducted & Radiated
	Harmonic Current Emissions	IEC 61000-3-2
	Voltage Fluctuations & Flicker	IEC 61000-3-3
	Immunity	EN 55035/CISPR 35: IEC 61000-4-2 (+/-8kV air, +/- 4kV contact), IEC 61000-4-3, IEC 61000-4-4, IEC 61000-4-5 (2KV L-L, 1KV L-FG), IEC 61000-4-6, IEC 61000-4-8, IEC 61000-4-11
Mechanical	Dimensions (L x W x H)	59.0mm (2.32in) x 40.9mm (1.61in) x 32.7mm (1.29in)
	Cable Length &	1500mm 22AWG
	DC Output Connector	2.1mm (+) x 5.5mm (-) x 10mm
MTBF	Telcordia (SR-332 Issue 3)	>1,000,000 Hours min. at 264VAC/50Hz, max. load, 25°C
Notes	1. The specifications defined are at ambient temperature of 25C, unless otherwise specified. 2. 20MHz bandwidth frequency oscilloscope, add a 0.1μF multilayer Cap. and Low ESR Electrolytic Cap. (10μF) at output connector terminals (nominal line voltage, full load). 3. Efficiency is measured after 30 minutes burn-in.	

Phihong is not responsible for any error and reserves the right to make changes without notice. Please visit our website at www.phihong.com for the most up-to-date specifications and contact information. Revised 1/7/2025

PYA10T050200

PHIHONG

Outline Drawing

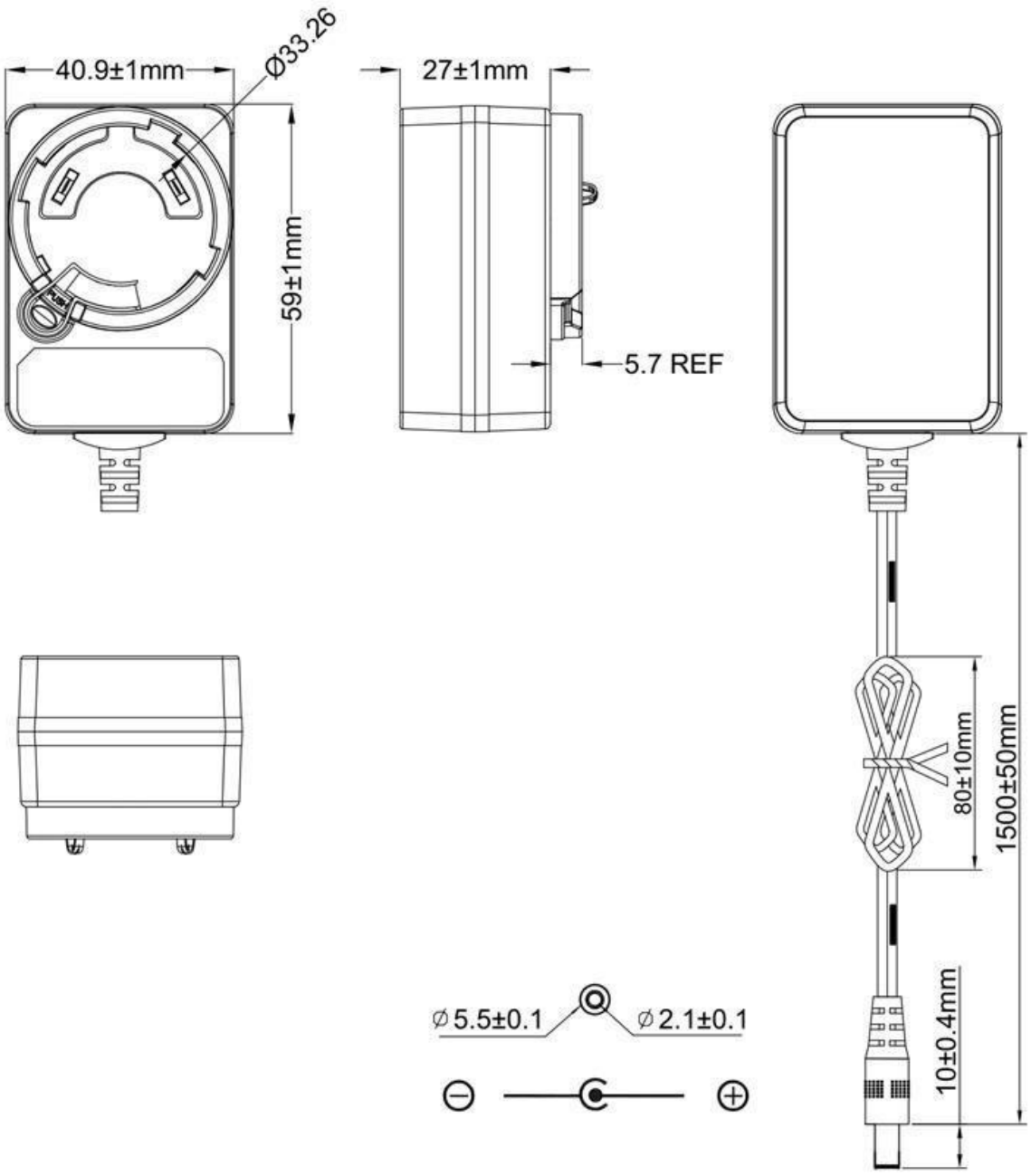

Phihong is not responsible for any error and reserves the right to make changes without notice. Please visit our website at www.phihong.com for the most up-to-date specifications and contact information. Revised 1/7/2025

PHIHONG USA CORP

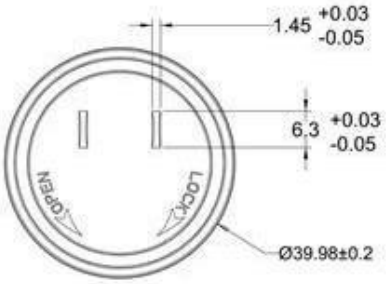

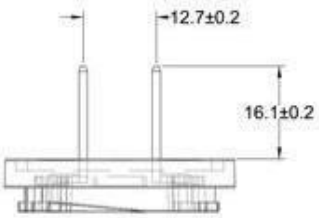

TPA

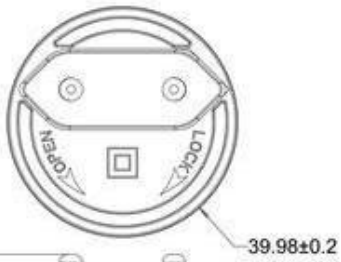

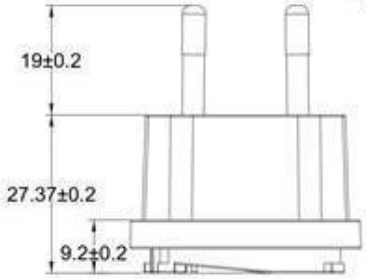

TPE

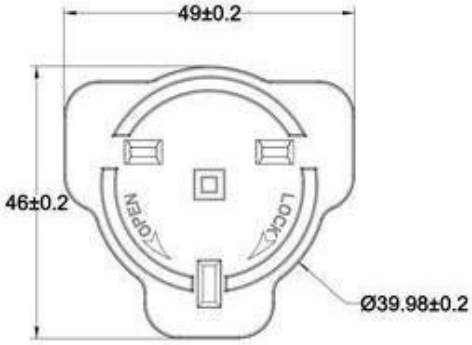

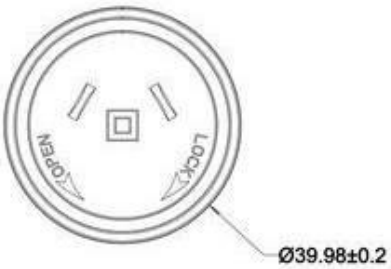

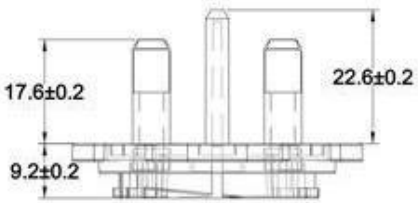

TPK

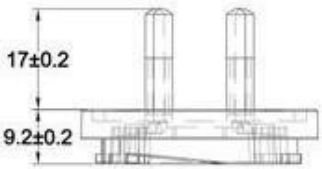

TPS

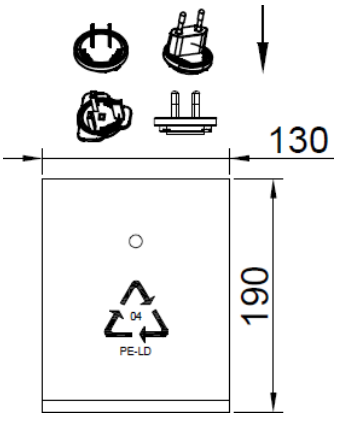

TPBAG

Contains a set of all four clips (TPA, TPE, TPK, and TPS)

Phihong is not responsible for any error and reserves the right to make changes without notice. Please visit our website at www.phihong.com for the most up-to-date specifications and contact information. Revised 1/7/2025

Supplier's Declaration of Conformity
47 CFR § 2.1077 Compliance Information

MODEL
PYA10T050200

Phihong USA Corporation
47800 Fremont Boulevard
Fremont, CA 94538
Telephone: (510) 445-0100
www.phihong.com

This device complies with part 15 of the FCC Rules. Operation is subject to the following two conditions: (1) This device may not cause harmful interference, and (2) this device must accept any interference received, including interference that may cause undesired operation.

Phihong is not responsible for any error and reserves the right to make changes without notice. Please visit our website at www.phihong.com for the most up-to-date specifications and contact information. Revised 1/7/2025