PHIHONG USA CORP

PYA24T Series

24W Interchangeable Plug Wall Mount Adapters

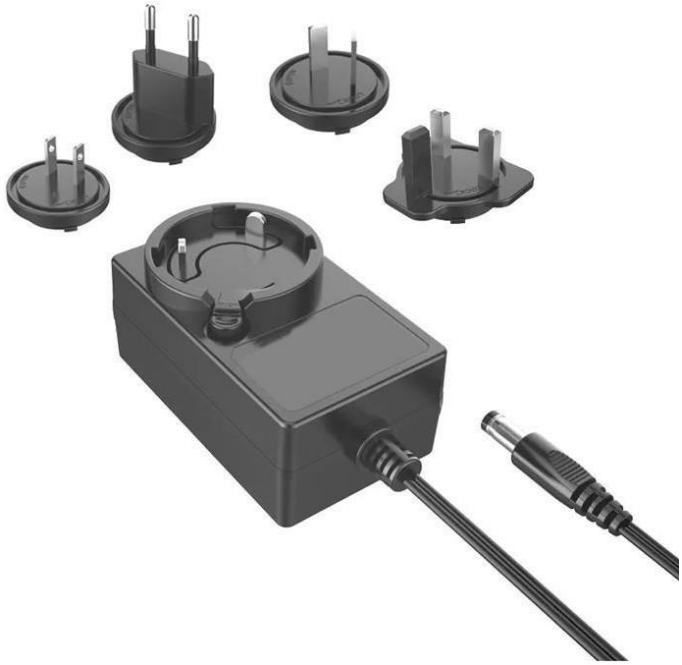

Features

- Interchangeable US/EU/UK/AU Plugs (sold separately)
- US DoE Level VI Efficiency Compliance
- EU Ecodesign 2019/1782 Compliance
- Load Regulation: +/-5%
- Over-Voltage, Over-Current and Short Circuit Protection

Applications

- Smart Home Devices
- Telecommunication
- Electronic Devices
- Office Equipment

Description

Phihong PYA24T Series 24-watt wall adapters utilizing interchangeable plugs are versatile and efficient power solutions designed to meet the needs of a wide range of electronic devices. One of the key features of these adapters is their ability to accommodate various field changeable plug types, including US, EU, UK, and AU plugs. This versatility allows users to easily adapt the adapters to different electrical systems and socket configurations, eliminating the need for multiple adapters or converters when traveling to different countries.

The adapters meet Level VI and EU Ecodesign 2019/1782 efficiency limits as well as those of Level VII limits proposed by the US Department of Energy in 2023.

Phihong, a reputable manufacturer known for its high-quality power solutions, ensures that these adapters meet stringent safety standards. Built-in protection mechanisms such as over-voltage protection, over-current protection, and short-circuit protection safeguard your devices against potential damage, providing peace of mind to users.

Phihong is not responsible for any error and reserves the right to make changes without notice. Please visit our website at www.phihong.com for the most up-to-date specifications and contact information. Revised 1/8/2025

PYA24T Series

PHIHONG

Specifications[1]

Model		PYA24T120200	PYA24T240100
Output	DC Output Voltage	12V	24V
	Max Current	2.0A	1.0A
	Output Power	24.0W	
	Regulation	± 1% Line / ± 5% Load	
	Ripple & Noise P-P(max)[2]	150mV	
Input	AC Input Voltage Range	90 to 264VAC	
	AC Input Frequency	47 to 63Hz	
	AC Input Current	0.6A max. @ input 100-240VAC, full load	
	AC Inrush Current	40A max. @ input 240VAC	
	No Load Power Consumption at 115VA Input	≤ 0.075W	≤ 0.075W
	No Load Power Consumption at 230VAC Input	≤ 0.075W	≤ 0.100W
	115VAC Average Efficiency[3]	≥ 86.8%	≥ 86.8%
	230VAC Average Efficiency[3]	≥ 86.8%	≥ 86.8%
	230VAC 10% Load Efficiency[3]	≥ 76.8%	≥ 76.8%
	Leakage Current	0.25mA max. at 264VAC/50Hz max., no load	
Protection	Over-Voltage	24V max	48V max
	Short Circuit	Auto-recovery and no damage.	
	Over-Current	4.0A max, auto-recovery	2.0A max, auto-recovery
Environmental	Operating Temperature	0ºC to +40ºC	
	Non-Operating Temperature	-20ºC to +70ºC	
	Operating Humidity	10% to 95% RH max	
Safety Approvals and EMC	Dielectric Withstand (HI-POT)	Primary to Secondary: 3000VAC, 10mA max. 1 min.	
	Insulation Resistance	Primary to Secondary: Min. 50M OHM at 500 VDC	
	Standards	cULus 62368-1, IEC 62368-1, AS/NZS 62368.1	
	EMI Emissions	FCC Part 15 Class B, CAN ICES-003(B)/NMB-003(B), CISPR 32 Class B Conducted & Radiated	
	Harmonic Current Emissions	IEC 61000-3-2	
	Voltage Fluctuations & Flicker	IEC 61000-3-3	
	Immunity	EN 55035/CISPR 35: IEC 61000-4-2 (+/-8kV air, +/- 4kV contact), IEC 61000-4-3, IEC 61000-4-4, IEC 61000-4-5 (2KV L-L, 1KV L-FG), IEC 61000-4-6, IEC 61000-4-8, IEC 61000-4-11	
Mechanical	Dimensions (L x W x H)	71.2mm (2.80in) x 43.2mm (1.70in) x 36.7mm (1.44in)	
	Cable Length & Gauge	1500mm 22AWG	
	DC Output Connector	2.1mm (+) x 5.5mm (-) x 10mm	
MTBF	Telcordia (SR-332 Issue 3)	>1,000,000 Hours min. at 264VAC/50Hz, max. load, 25°C	
Notes	1. The specifications defined are at ambient temperature of 25C, unless otherwise specified. 2. 20MHz bandwidth frequency oscilloscope, add a 0.1μF multilayer Cap. and Low ESR Electrolytic Cap. (10μF) at output connector terminals (nominal line voltage, full load). 3. Efficiency is measured after 30 minutes burn-in.		

Phihong is not responsible for any error and reserves the right to make changes without notice. Please visit our website at www.phihong.com for the most up-to-date specifications and contact information. Revised 1/8/2025

PYA24T Series

PHIHONG

Outline Drawing

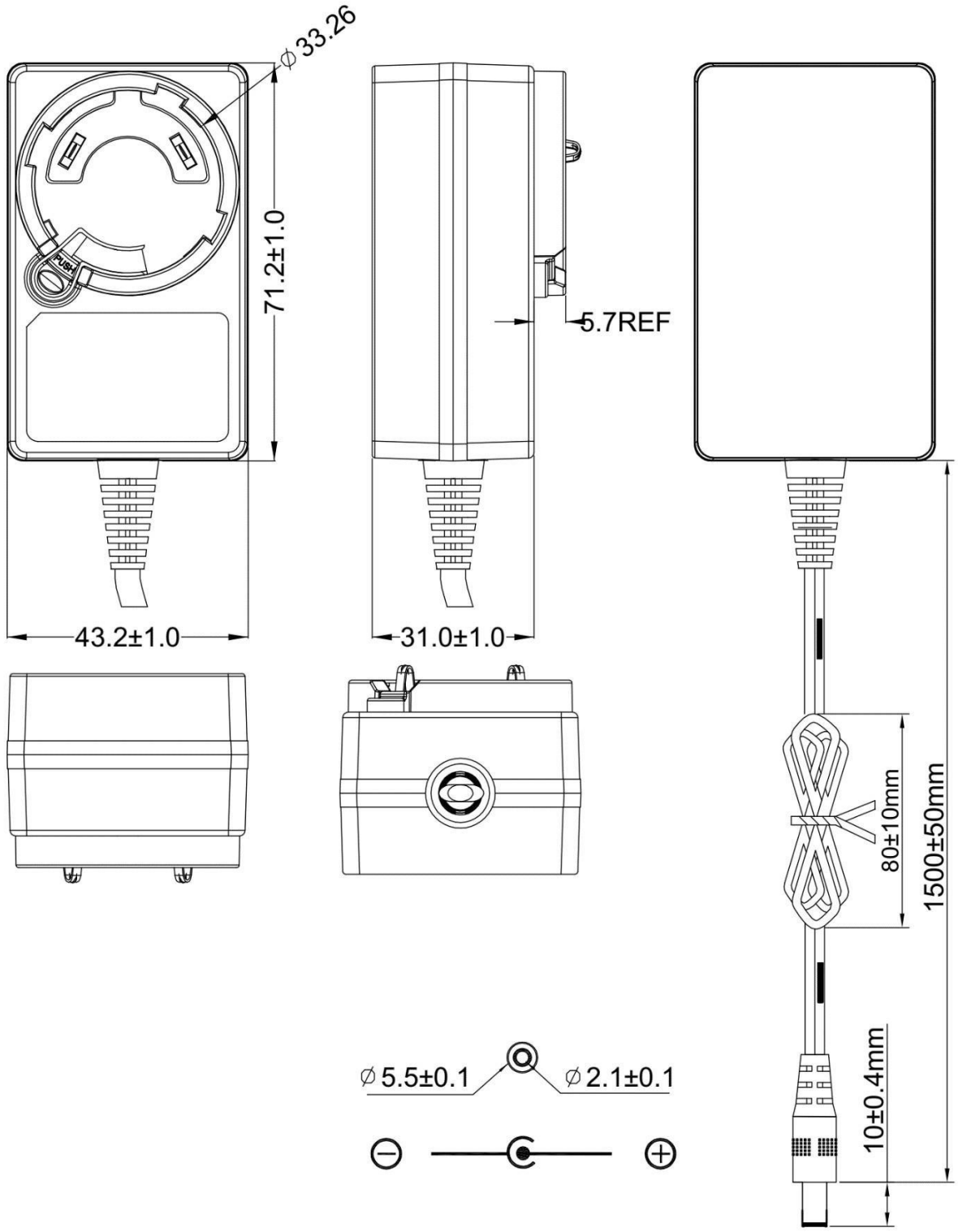

Phihong is not responsible for any error and reserves the right to make changes without notice. Please visit our website at www.phihong.com for the most up-to-date specifications and contact information. Revised 1/8/2025

PHIHONG USA CORP

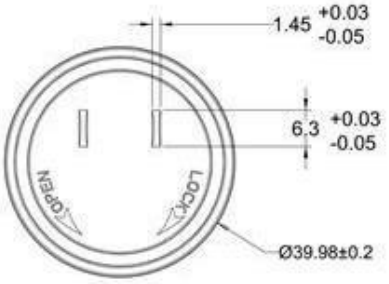

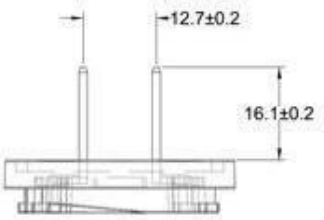

TPA

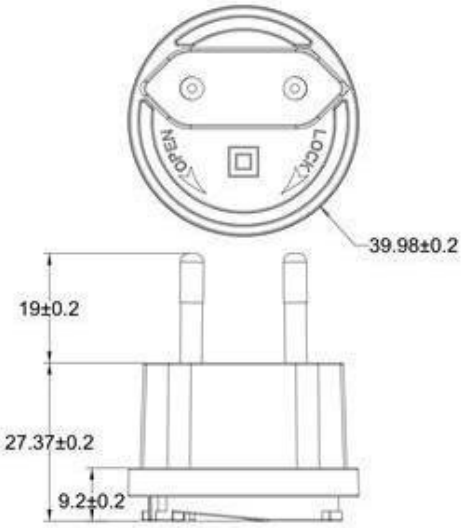

TPE

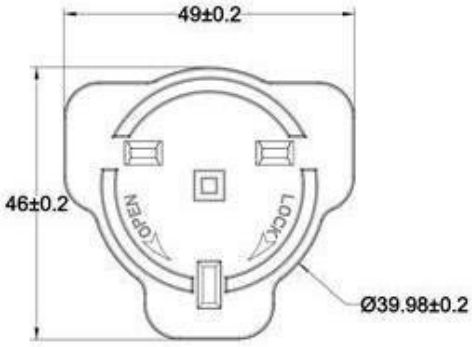

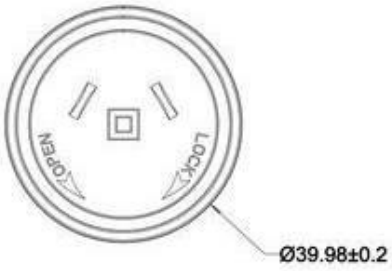

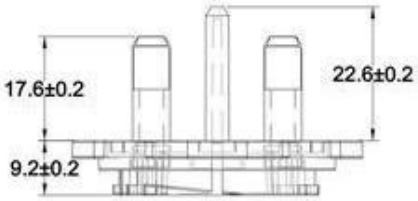

TPK

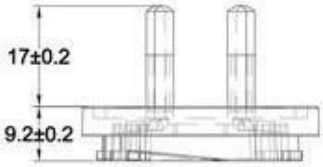

TPS

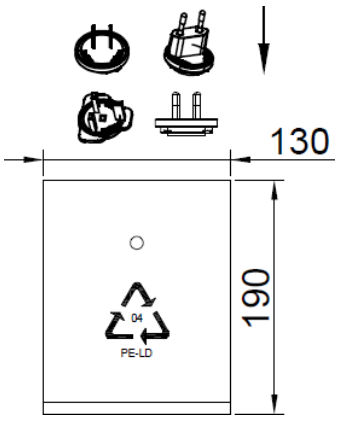

TPBAG

Contains a set of all four clips (TPA, TPE, TPK, and TPS)

Phihong is not responsible for any error and reserves the right to make changes without notice. Please visit our website at www.phihong.com for the most up-to-date specifications and contact information. Revised 1/8/2025

PHIHONG USA CORP

Supplier's Declaration of Conformity
47 CFR § 2.1077 Compliance Information

MODELS
PYA24T120200
PYA24T240100

Phihong USA Corporation
47800 Fremont Boulevard
Fremont, CA 94538
Telephone: (510) 445-0100
www.phihong.com

This device complies with part 15 of the FCC Rules. Operation is subject to the following two conditions: (1) This device may not cause harmful interference, and (2) this device must accept any interference received, including interference that may cause undesired operation.

Phihong is not responsible for any error and reserves the right to make changes without notice. Please visit our website at www.phihong.com for the most up-to-date specifications and contact information. Revised 1/8/2025