# EO-N/PT/LED - Socket

0804148

https://www.phoenixcontact.com/us/products/0804148

Please be informed that the data shown in this PDF document is generated from our online catalog. Please find the complete data in the user documentation. Our general terms of use for downloads are valid.



Socket, Pin connector pattern type N, for Brazil/South Africa and other countries, LED display, gray, for mounting on a DIN rail in the service interface or direct mounting, -5 °C, 40 °C

## Commercial data

| | |
|---|---|
| Item number | 0804148 |
| Packing unit | 5 pc |
| Minimum order quantity | 5 pc |
| Sales key | BE76 |
| Product key | BE7624 |
| Catalog page | Page 566 (C-3-2019) |
| GTIN | 4055626227092 |
| Weight per piece (including packing) | 73.22 g |
| Weight per piece (excluding packing) | 73.2 g |
| Customs tariff number | 85366990 |
| Country of origin | PL |

# Technical data

## Product properties

| | |
|---|---|
| Product type | Socket |
| Country ID | Brazil |

Data management status

| | |
|---|---|
| Article revision | 04 |

## Connection data

| | |
|---|---|
| Stripping length | 10 mm |
| Internal cylindrical gage | A3 |
| | B3 |
| Conductor cross section rigid | 0.2 mm² ... 4 mm² |
| Cross section AWG | 24 ... 12 (converted acc. to IEC) |
| Conductor cross section flexible | 0.25 mm² ... 2.5 mm² |
| Conductor cross section, flexible [AWG] | 24 ... 14 (converted acc. to IEC) |
| Conductor cross-section flexible (ferrule without plastic sleeve) | 0.25 mm² ... 2.5 mm² |
| Flexible conductor cross section (ferrule with plastic sleeve) | 0.25 mm² ... 2.5 mm² |
| Conductor cross-section flexible (2 conductors with the same cross-section, with TWIN ferrule and plastic sleeve) | 0.25 mm² ... 2.5 mm² |
| Nominal current | 10 A |
| Nominal voltage | 250 V AC (50 Hz ... 60 Hz) |

Connection cross sections directly pluggable

| | |
|---|---|
| Conductor cross section rigid | 0.5 mm² ... 4 mm² |
| Conductor cross-section flexible (ferrule without plastic sleeve) | 1 mm² ... 2.5 mm² |
| Flexible conductor cross section (ferrule with plastic sleeve) | 1 mm² ... 2.5 mm² |

## Signaling

| | |
|---|---|
| Status display | yes |

## Dimensions

| | |
|---|---|
| Width | 45 mm |
| Height | 75 mm |
| Depth | 58.9 mm |
| Depth on NS 35/7,5 | 60 mm |
| Depth on NS 35/15 | 67.5 mm |
| Hole diameter | 4.4 mm |

## Material specifications

| | |
|---|---|
| Color | gray (RAL 7042) |
| Flammability rating according to UL 94 | V0 |
| Insulating material | PA |
| Contact material | CuZn37 |

| | |
|---|---|
| Static insulating material application in cold | -60 °C |
| Relative insulation material temperature index (Elec., UL 746 B) | 130 °C |
| Fire protection for rail vehicles (DIN EN 45545-2) R22 | HL 1 - HL 3 |
| Fire protection for rail vehicles (DIN EN 45545-2) R23 | HL 1 - HL 3 |
| Fire protection for rail vehicles (DIN EN 45545-2) R24 | HL 1 - HL 3 |
| Fire protection for rail vehicles (DIN EN 45545-2) R26 | HL 1 - HL 3 |
| Surface flammability NFPA 130 (ASTM E 162) | passed |
| Specific optical density of smoke NFPA 130 (ASTM E 662) | passed |
| Smoke gas toxicity NFPA 130 (SMP 800C) | passed |

## Connector

| | |
|---|---|
| Type of plug | Pin connector pattern type N |

## Environmental and real-life conditions

### Ambient conditions

| | |
|---|---|
| Degree of protection | IP20 |
| Ambient temperature (operation) | -5 °C ... 40 °C (Average value over a period of 24 hours not above +35°C) |
| Ambient temperature (storage/transport) | -25 °C ... 60 °C (for a short time, not exceeding 24 h, -60 °C to +70 °C) |
| Permissible humidity (storage/transport) | 30 % ... 70 % |

## Mounting

| | |
|---|---|
| Mounting type | for mounting on a DIN rail in the service interface or direct mounting |

## Drawings

Circuit diagram

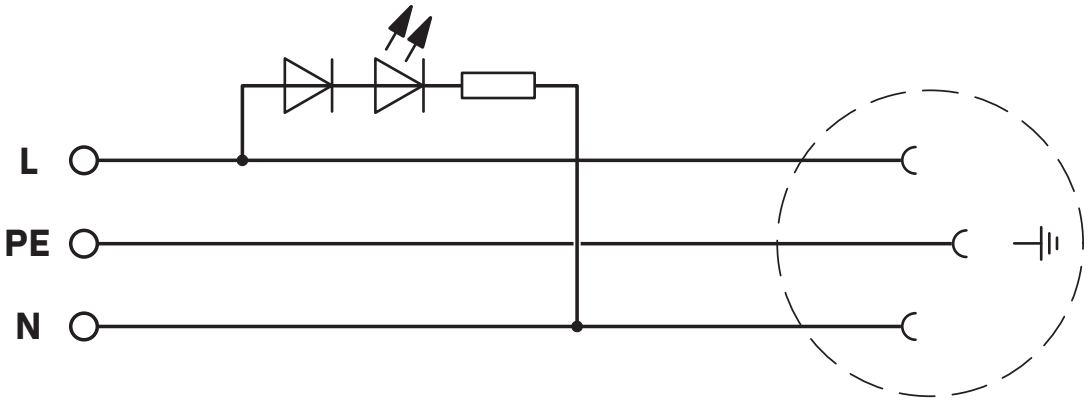

## Approvals

To download certificates, visit the product detail page: https://www.phoenixcontact.com/us/products/0804148

**EAC-RoHS**
Approval ID: RU D-DE.HB49.B.00025

## Classifications

### ECLASS

| | |
|---|---|
| ECLASS-11.0 | 27142305 |
| ECLASS-12.0 | 27142305 |
| ECLASS-13.0 | 27142305 |

### ETIM

| | |
|---|---|
| ETIM 9.0 | EC001663 |

### UNSPSC

| | |
|---|---|
| UNSPSC 21.0 | 39121400 |

## Environmental product compliance

EU RoHS

| | |
|---|---|
| Fulfills EU RoHS substance requirements | Yes |
| Exemption | 7(a), 7(c)-I |

China RoHS

| | |
|---|---|
| Environment friendly use period (EFUP) | EFUP-50 |
| | An article-related China RoHS declaration table can be found in the download area for the respective article under "Manufacturer declaration". For all articles with EFUP-E, no China RoHS declaration table issued and required. |

EU REACH SVHC

| | |
|---|---|
| REACH candidate substance (CAS No.) | Lead(CAS: 7439-92-1) |
| SCIP | 201ebf9c-cf4d-4178-b848-ddecfcd02a46 |


Phoenix Contact 2024 © - all rights reserved
https://www.phoenixcontact.com



Phoenix Contact USA
586 Fulling Mill Road
Middletown, PA 17057, United States
(+717) 944-1300
info@phoenixcon.com