VAL-SEC-T2-2+F-120DC-FM - Type 2 surge arrester

1033788

https://www.phoenixcontact.com/us/products/1033788

Please be informed that the data shown in this PDF document is generated from our online catalog. Please find the complete data in the user documentation. Our general terms of use for downloads are valid.



Pluggable surge protective device free of leakage current for 2-pos. isolated and grounded DC voltage systems with linear operating characteristic up to 120 V DC, for DIN rail mounting, 3-pos. base element with remote indication contact, three pluggable temperature-monitored protective elements, status message on each plug.

Your advantages

- Surge protection family for universal use with optimum energy coordination from the lightning current arrester to the device protection
- Easy to maintain due to consistently pluggable protection modules
- Excellent level of information provided by mechanical/visual status indicator and remote indication contact
- More space in the control cabinet due to the narrow overall width of just 12 mm per position
- Free of leakage current so there is no influence on insulation monitoring

Commercial data

Item number	1033788
Packing unit	1 pc
Minimum order quantity	1 pc
Sales key	CL01
Product key	CL1353
Catalog page	Page 59 (C-4-2019)
GTIN	4055626539973
Weight per piece (including packing)	293.2 g
Weight per piece (excluding packing)	287.57 g
Customs tariff number	85363090
Country of origin	DE

Technical data

Product properties

Product type	Surge arrester
Product family	SEC Family
IEC test classification	II
	T2
EN type	T2
IEC power supply system	DC
Type	DIN rail module, two-section, divisible
Number of positions	2
Surge protection fault message	Optical, remote indicator contact

Insulation characteristics

Overvoltage category	III
Pollution degree	2

Electrical properties

Nominal voltage U_N	100 V DC ... 120 V DC

Indicator/remote signaling

Connection name	Remote fault indicator contact
Switching function	Changeover contact
Operating voltage	5 V AC ... 250 V AC (Altitude ≤ 2000 m (amsl))
	5 V AC ... 150 V AC (Altitude > 2000 m (amsl))
	125 V DC (200 mA DC)
Operating current	5 mA AC ... 1 A AC
	1 A DC (30 V DC)

Connection data

Connection method	Screw connection
Screw thread	M5
Tightening torque	4.5 Nm
Stripping length	16 mm
Conductor cross section flexible	2.5 mm² ... 16 mm²
Conductor cross section rigid	2.5 mm² ... 25 mm²
Conductor cross section AWG	12 ... 4
Connection method	Fork-type cable lug
Conductor cross section flexible	1.5 mm² ... 6 mm²

Remote fault indicator contact

Connection method	Plug-in/screw connection via COMBICON
Screw thread	M2
Tightening torque	0.25 Nm
Stripping length	7 mm

Conductor cross section flexible	0.14 mm² ... 1.5 mm²
Conductor cross section rigid	0.14 mm² ... 1.5 mm²
Conductor cross section AWG	28 ... 16

Dimensions

Dimensional drawing	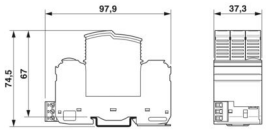
Width	37.3 mm
Height	97.9 mm
Depth	74.5 mm (incl. DIN rail 7.5 mm)
Horizontal pitch	2 Div.

Material specifications

Color (Male connector)	light gray (RAL 7035)
Color (Base element)	gray (RAL 7042)
Flammability rating according to UL 94	V-0
CTI value of material	600
Insulating material	PA6.6-FR 20% GF
	PBT-FR
Material group	I
Housing material	PA 6.6-FR 20 % GF
	PBT-FR

Protective circuit

Mode of protection	(DC+) - (DC-)
	(DC+/DC-) - PE
Direction of action	(DC+/DC-) - PE
Nominal voltage U_N	100 V DC ... 120 V DC
Maximum continuous voltage U_C	150 V DC
Rated load current I_L	40 A (Biconnect M4 fork-type cable lug 6 mm²)
	63 A (TWIN ferrule 2 x 10 mm²)
Residual current I_{PE}	≤ 5 µA
Nominal discharge current I_n (8/20) µs	20 kA
Maximum discharge current I_{max} (8/20) µs	40 kA
Total discharge current I_{total} (8/20) µs	40 kA
Short-circuit current rating I_{SCCR}	0.2 kA (without backup fuse)
	6 kA (for 20 A gG/B backup fuse)
Voltage protection level U_p (DC+) - (DC-)	≤ 1.8 kV
Voltage protection level U_p (DC+/DC-) - PE	≤ 1.3 kV
Front of wave sparkover voltage at 6 kV (1.2/50) µs (DC+/DC-) - PE	≤ 1.1 kV

TOV behavior at U_T	174 V DC (5 s / withstand mode)
Max. backup fuse with V-type through wiring	20 A (gG / B at I_{SCCR} > 200 A)
Max. backup fuse with branch wiring	20 A (gG / B at I_{SCCR} > 200 A)

Additional technical data

Maximum continuous voltage U_C	135 V AC (for operation in safety lighting systems)
Continuous operating current I_{CPV}	10 µA

Environmental and real-life conditions

Ambient conditions

Degree of protection	IP20
Ambient temperature (operation)	-40 °C ... 80 °C
Ambient temperature (storage/transport)	-40 °C ... 80 °C
Altitude	≤ 6000 m (amsl)
Permissible humidity (operation)	5 % ... 95 %
Shock (operation)	30g (Half-sine / 11 ms / 3x ±X, ±Y, ±Z)
Vibration (operation)	5g (10 ... 500 Hz / 2.5 h / X, Y, Z)

Standards and regulations

Standards/specifications	IEC 61643-11
Note	2011

EN 61643-11

Standards/specifications	EN 61643-11
Note	2012

Mounting

Mounting type	DIN rail: 35 mm

Drawings

Dimensional drawing

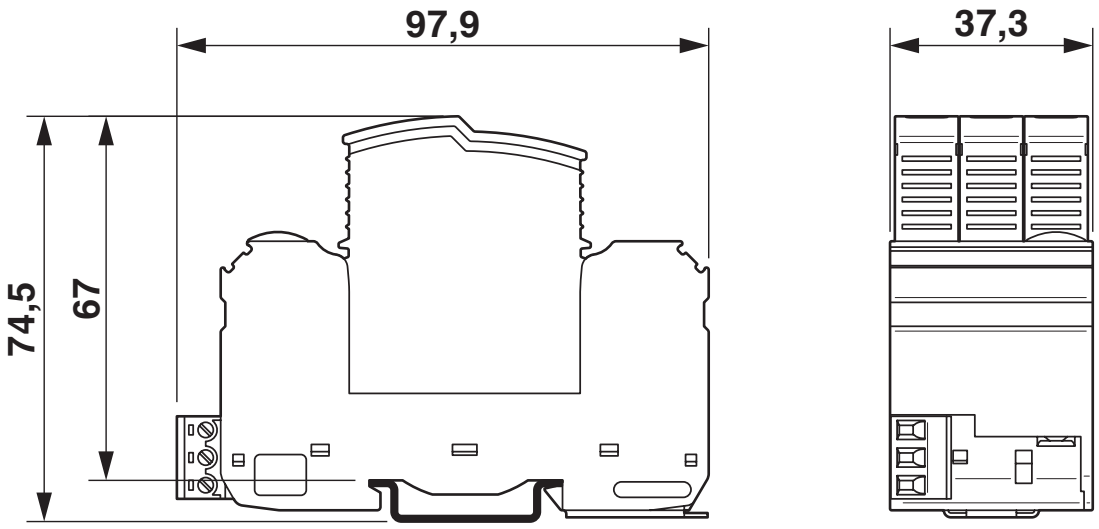

Circuit diagram

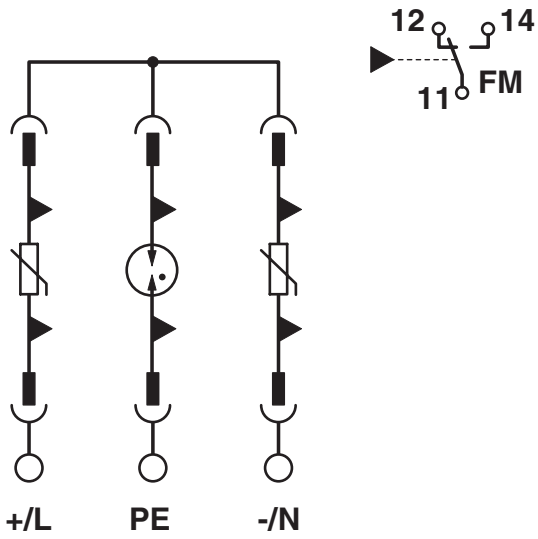

Approvals

To download certificates, visit the product detail page: https://www.phoenixcontact.com/us/products/1033788

UAE-RoHS
Approval ID: 23-10-88707

Classifications

ECLASS

ECLASS-11.0	27130805
ECLASS-13.0	27171302

ETIM

ETIM 9.0	EC000941

UNSPSC

UNSPSC 21.0	39121600

Environmental product compliance

EU RoHS

Fulfills EU RoHS substance requirements	Yes, No exemptions

China RoHS

Environment friendly use period (EFUP)	EFUP-E
	No hazardous substances above the limits

EU REACH SVHC

REACH candidate substance (CAS No.)	No substance above 0.1 wt%

Phoenix Contact 2025 © - all rights reserved
https://www.phoenixcontact.com

Phoenix Contact USA
586 Fulling Mill Road
Middletown, PA 17057, United States
(+717) 944-1300
info@phoenixcon.com