TTC-6P-3-HF-12DC-PT-I - Surge protection device

1065313

https://www.phoenixcontact.com/us/products/1065313

Please be informed that the data shown in this PDF document is generated from our online catalog. Please find the complete data in the user documentation. Our general terms of use for downloads are valid.



Surge protection, consisting of protective plug and base element, with integrated status indicator for three signal wires with common reference potential. For HF applications and telecommunications interfaces without supply voltage. Can be used in safety-related circuits up to SIL 3.

Your advantages

- Space-saving and cost-saving with a narrow overall width of just 6 mm
- Continuous monitoring of protective devices, plus mechanical status indicator with optional remote signaling
- Finding the right product for all possible requirements in MCR applications is easy, thanks to the complete range of products with customized features
- Easy testing and documentation with CHECKMASTER 2 with pluggable protective modules
- The signal is not influenced during maintenance work, thanks to the impedance-neutral insertion and removal of protective plugs

Commercial data

Item number	1065313
Packing unit	1 pc
Minimum order quantity	1 pc
Sales key	CL23
Product key	CL2162
Catalog page	Page 171 (C-4-2019)
GTIN	4055626727509
Weight per piece (including packing)	41.2 g
Weight per piece (excluding packing)	37 g
Customs tariff number	85363010
Country of origin	DE

Technical data

Product properties

Product type	Surge protection for information technology
Product family	TERMITRAB complete
IEC test classification	C1
	C2
	C3
	D1
Type	DIN rail module, two-section, divisible

Insulation characteristics

Overvoltage category	III
Pollution degree	2

Electrical properties

Nominal voltage U_N	12 V DC

Connection data

Connection method	Push-in connection
Conductor cross section flexible	0.2 mm² ... 2.5 mm²
Conductor cross section rigid	0.2 mm² ... 4 mm²
Conductor cross section AWG	24 ... 12

Dimensions

Dimensional drawing	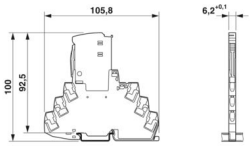
Width	6.2 mm +0.1 mm
Height	105.8 mm
Depth	100 mm (incl. DIN rail 7.5 mm)

Material specifications

Color (Base element)	gray (RAL 7042)
Color (Male connector)	light gray (RAL 7035)
Flammability rating according to UL 94	V-0
Insulating material	PBT
Housing material	PBT

Mechanical properties

Mechanical data

Open side panel	No

Protective circuit

Direction of action	Line-Line & Line-Signal Ground/Shield & optional Signal Ground/Shield-Earth Ground
Maximum continuous voltage U_C	15 V DC
	10 V AC
Rated current	600 mA (56 °C)
Operating effective current I_C at U_C	≤ 100 µA
Residual current I_{PE}	≤ 200 µA
Nominal discharge current I_n (8/20) µs (line-line)	5 kA
Nominal discharge current I_n (8/20) µs (line-ground)	5 kA
Pulse discharge current I_{imp} (10/350) µs (line-line)	0.5 kA
Pulse discharge current I_{imp} (10/350) µs (line-earth)	0.5 kA
Total discharge current I_{total} (8/20) µs	10 kA
Output voltage limitation at 1 kV/µs (wire-wire)	≤ 25 V
Output voltage limitation at 1 kV/µs (wire-earth)	≤ 25 V
Voltage protection level U_p (line-line)	≤ 145 V (C1 - 1 kV / 500 A)
	≤ 260 V (C2 - 10 kV / 5 kA)
	≤ 25 V (C3 - 25 A)
	≤ 30 V (C3 - 100 A)
Voltage protection level U_p (line-earth)	≤ 80 V (C1 - 1 kV / 500 A)
	≤ 95 V (C2 - 10 kV / 5 kA)
	≤ 25 V (C3 - 25 A)
	≤ 30 V (C3 - 100 A)
Voltage protection level U_p static (line-line)	≤ 40 V (C1 - 1 kV / 500 A)
	≤ 95 V (C2 - 10 kV / 5 kA)
Voltage protection level U_p static (line-earth)	≤ 40 V (C1 - 1 kV / 500 A)
	≤ 95 V (C2 - 10 kV / 5 kA)
Response time t_A (line-line)	≤ 1 ns
Response time t_A (line-earth)	≤ 1 ns
Input attenuation aE, sym.	typ. 0.3 dB (≤ 8.7 MHz/150 Ω)
Input attenuation aE, asym.	typ. 0.3 dB (≤ 10.5 MHz/150 Ω)
Cut-off frequency fg (3 dB), sym. in 150 Ω system	typ. 60 MHz
Cut-off frequency fg (3 dB), asym. (PE) in 150 Ω system	typ. 60 MHz
Capacity (Core-Core)	typ. 32 pF
Capacity (Core-Earth)	typ. 32 pF
Resistance per path	1.65 Ω ±20 %
Surge protection fault message	optical
Max. required back-up fuse	630 mA (FF)
Impulse durability (line-line)	C1 - 1 kV / 500 A
	C2 - 10 kV / 5 kA
	C3 - 100 A
Impulse durability (line-earth)	C1 - 1 kV / 500 A
	C2 - 10 kV / 5 kA

	C3 - 100 A
	D1 - 500 A
Pulse reset time (line-line)	≤ 30 ms
Pulse reset time (line-earth)	≤ 30 ms

Additional technical data

Max. total discharge current $I_{total\ max}$ (8/20) µs	20 kA (1x)

Environmental and real-life conditions

Ambient conditions

Degree of protection	IP20
Ambient temperature (operation)	-40 °C ... 85 °C
Ambient temperature (storage/transport)	-40 °C ... 85 °C
Altitude	≤ 4000 m (amsl)
Permissible humidity (operation)	5 % ... 95 %

Standards and regulations

Standards/specifications	IEC 61643-21
Note	2000 + corrigendum 2001 + A1:2008, modified + A2:2012

EN 61643-21

Standards/specifications	EN 61643-21
Note	2001 + A1:2009 + A2:2013

Mounting

Mounting type	DIN rail: TH 35 - 7.5 mm

Drawings

Dimensional drawing

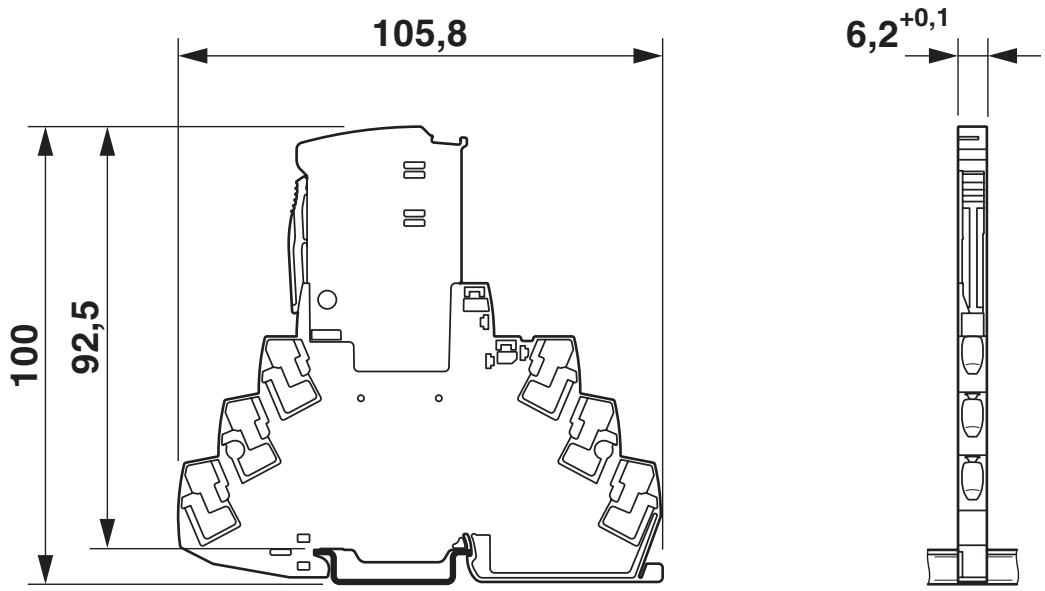

Schematic diagram

TTC-6P-3-HF-...-I									
Category	1oo1 architecture, HFT=0				1oo2 architecture, HFT=1				
	PFD_{AVG}	PFH	Used budget of SIL 2 SIF		PFD_{AVG}	PFH	CCF	Used budget of SIL 3 SIF	
			PFD_{AVG}	PFH				PFD_{AVG}	PFH
	$1.30_{x10^{-4}}$	$2.31_{x10^{-8}}$ 1/h	1.3 %	2.3 %	$6.52_{x10^{-6}}$	$1.16_{x10^{-9}}$ 1/h	5 %	1.3 %	2.3 %
					$1.30_{x10^{-5}}$	$2.31_{x10^{-9}}$ 1/h	10 %	1.3 %	2.3 %
	Calculation based on exida report, Phoenix Contact 16/06-072 R022 V4R2 exida Profile 1, FMEDA Analysis 2, T_{proof}: 1 year, MT: 10 years, MTTR: 24 hours, PTC: 99% Used standards IEC/EN 61508, edition 2010 (device specific) IEC/EN 61511, edition 2016 + COR1:2016 + A1:2017 (system specific)								

Functional safety scenarios

Diagram

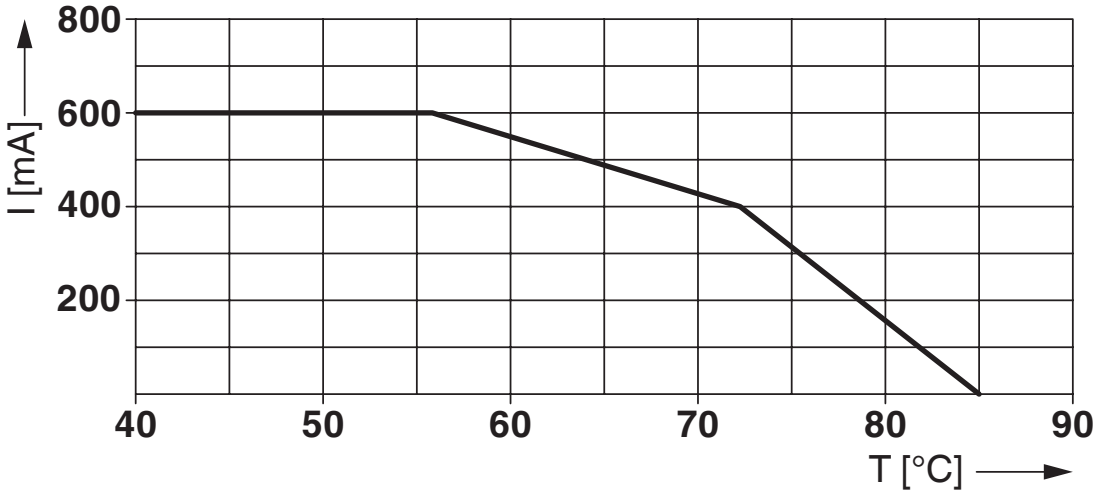

Circuit diagram

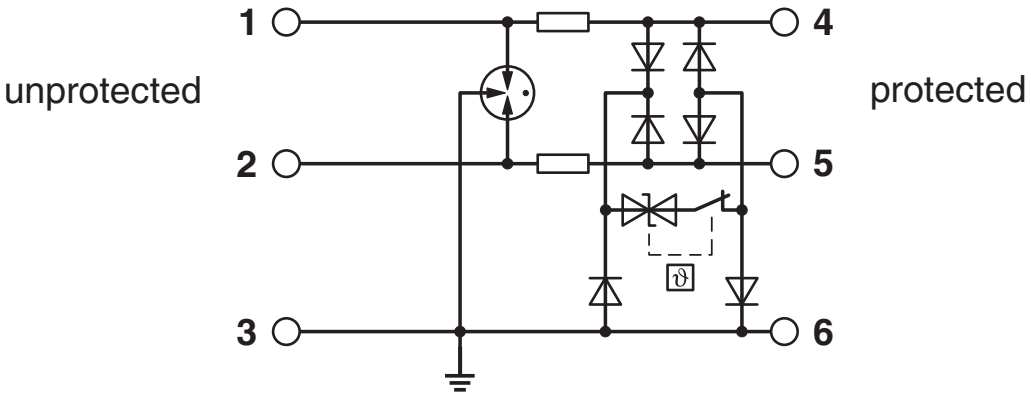

Approvals

To download certificates, visit the product detail page: https://www.phoenixcontact.com/us/products/1065313

DNV GL
Approval ID: TAE000027G

UL Listed
Approval ID: FILE E 138168

UAE-RoHS
Approval ID: 22-06-16781

Functional Safety
Approval ID: 16-06-072 R022 V4R3

cUL Listed
Approval ID: FILE E 333250

UL Listed
Approval ID: FILE E 333250

cULus Listed

Classifications

ECLASS

ECLASS-11.0	27130807
ECLASS-13.0	27171503

ETIM

ETIM 9.0	EC000943

UNSPSC

UNSPSC 21.0	39121600

Environmental product compliance

EU RoHS

Fulfills EU RoHS substance requirements	Yes
Exemption	7(a), 7(c)-I

China RoHS

Environment friendly use period (EFUP)	EFUP-50
	An article-related China RoHS declaration table can be found in the download area for the respective article under "Manufacturer declaration". For all articles with EFUP-E, no China RoHS declaration table issued and required.

EU REACH SVHC

REACH candidate substance (CAS No.)	Lead(CAS: 7439-92-1)
SCIP	817002ab-d1b5-46d6-bd9b-6b84cde9e07e

Phoenix Contact 2025 © - all rights reserved
https://www.phoenixcontact.com

Phoenix Contact USA
586 Fulling Mill Road
Middletown, PA 17057, United States
(+717) 944-1300
info@phoenixcon.com