PSR-M-EF5-SDO4-2A-DO8-PI - Extension module

1104977

https://www.phoenixcontact.com/us/products/1104977

Please be informed that the data shown in this PDF document is generated from our online catalog. Please find the complete data in the user documentation. Our general terms of use for downloads are valid.



Safe extension module with 4 safe outputs (2 A), 4 reset inputs, 8 signal outputs, TBUS interface, up to SIL 3, Cat. 4/PL e, pluggable Push-in terminal block, TBUS connector included

Product description

The configurable and individually scalable PSRmodular safety system is a flexible safety solution for monitoring your machine or system. The safe extension module provides the system additional safe outputs as well as signal outputs.

Your advantages

- Cost-effective safety solution with a high level of adaptability to individual requirements
- Fast startup, thanks to easy hardware and software configuration
- Machine downtimes minimized with comprehensive, easy-to-understand diagnostics
- Tool-free and time-saving installation thanks to Push-in technology
- Narrow housing width of just 22.6 mm
- Up to Cat. 4/PL e in accordance with ISO 13849-1, SIL 3 in accordance with EN IEC 62061, SIL 3 in accordance with IEC 61508
- Suitable for elevator applications in accordance with EN 81-20

Commercial data

Item number	1104977
Packing unit	1 pc
Minimum order quantity	1 pc
Sales key	DN02
Product key	DNA362
GTIN	4055626974767
Weight per piece (including packing)	178 g
Weight per piece (excluding packing)	141 g
Customs tariff number	85371098
Country of origin	IT

Technical data

Notes

Note on application

Note on application	Only for industrial use

Product properties

Product type	Safety device
Application	Safe shutdown

Data management status

Article revision	01

Insulation characteristics

Protection class	III

Times

Response time	see user manual
Restart time	min. 5 s (Boot time)
	max. 10 s (Boot time)

Electrical properties

Maximum power dissipation for nominal condition	8.05 W (with max. permissible load)
Nominal operating mode	100% operating factor
Interfaces	DIN rail TBUS for connection to the master module, supplied as standard

Air clearances and creepage distances

Rated insulation voltage	250 V AC
Rated surge voltage/insulation	Basic insulation 4 kV between 24 V power supply and I/Os to the housing

Supply

Designation	A1/A2
Rated control circuit supply voltage U_S	19.2 V DC ... 28.8 V DC
Rated control circuit supply voltage U_S	24 V DC -20 % / +20 % (provide external protection, typically 5 A)
Rated control supply current I_S	typ. 25 mA (Outputs inactive)
	typ. 60 mA (Outputs active, without load)
Power consumption at U_S	typ. 0.6 W (Outputs inactive)
	max. 1.44 W (Outputs active, without load)
Inrush current	2 A (Δt < 1 ms at U_s)
Filter time	typ. 5 ms (in the event of voltage dips at U_s)
Protective circuit	Inverse-parallel protection against polarity reversal

Supply

Designation	24V/A2

Rated control circuit supply voltage U_S	24 V DC -20 % / +20 % (provide external protection, typically 5 A)
Rated control supply current I_S	< 0.5 mA (Outputs inactive)
	max. 20 mA (Outputs active, without load)
Power consumption at U_S	< 12 mW (Outputs inactive)
	max. 0.48 W (Outputs active, without load)
Inrush current	10 A (Δt = 1 ms at U_s)
Filter time	typ. 1 ms (in the event of voltage dips)

Input data

Digital: Reset inputs (FBK1, FBK2, FBK3, FBK4)

Description of the input	IEC 61131-2 type 3
Number of inputs	4
Input voltage range "0" signal	0 V DC ... 5 V DC
Input voltage range "1" signal	11 V DC ... 28.8 V DC
Input current range "0" signal	< 1 mA
Filter time	250 ms ±2 ms (Test pulse rate > 500 ms)
Cable length	max. 100 m (per input)
Max. permissible overall conductor resistance	1.2 kΩ (Input and reset circuit at U_S)
Current consumption	typ. 10 mA (typ. with U_S)
	max. 13 mA (at a control voltage of 28.8 V DC)

Output data

Digital: O1, O2, O3, O4

Output description	Safety-related digital outputs
	PNP, OSSD
	IEC 61131-2 type 2 (observe limiting continuous current)
Number of outputs	4 (can be used as 2 two-channel outputs)
Short-circuit protection	Yes (max. permissible short-circuit current 12 A)
Leakage current	max. 250 µA
Cable length	max. 100 m (per output)
Ohmic load	min. 10 Ω (Observe limiting continuous current)
Max. capacitive load	max. 820 nF
Max. inductive load	max. 2.4 mH
Limiting continuous current	2 A (per channel)
	8 A (Total current of all safe digital outputs)
Inrush current	max. 2.5 A (Δt ≤ 1 ms)
Nominal output voltage	24 V DC (Supply via A1)
Nominal output voltage range	18.6 V DC ... 28.2 V DC (U_S - 0.6 V)
Switching frequency	max. 1/4 x t_{Cycle} [Hz]
Output voltage when switched off	< 0.1 V
Test pulses	< 120 µs (Test pulse width of low test pulses)
	≥ 650 ms (Test pulse rate for low test pulse)

	< 150 µs (Test pulse width, high test pulse)
	≥ 1.5 s (Test pulse rate, high test pulse)
Discharging circuit	Yes, internal

Signal: MO1, MO2, MO3, MO4, MO5, MO6, MO7, MO8

Output description	PNP, IEC 61131-2 Typ 0,1
	non-safety-related
	Reference ground A2
Number of outputs	8
Output voltage when switched off	max. 0.1 V
Voltage	24 V DC (via 24 V)
Maximum inrush current	1.1 A (Δt = 3 s at U_s)
Limiting continuous current	100 mA (per channel)
	0.8 A (Total current of all digital signal outputs)
Leakage current	max. 100 µA
Switching frequency	max. 1/4 x t_{Cycle} [Hz]
Short-circuit protection	Yes (self-limitation at 1.1 A)
Cable length	max. 100 m (per output)

Connection data

Connection technology

pluggable	yes

Conductor connection

Connection method	Push-in connection
Conductor cross section rigid	0.2 mm² ... 2.5 mm²
Conductor cross section flexible	0.2 mm² ... 2.5 mm²
Conductor cross-section AWG	24 ... 14
Stripping length	10 mm

Signaling

Status display	12 x LED (yellow)
	4 x LED (green, yellow, red)
	1 x LED (green), 2 x LED (orange)
Operating voltage display	1 x green LED
Error indication	2 x LED (red)

Dimensions

Width	22.61 mm
Height	107.74 mm
Depth	113.6 mm

Material specifications

Color (Housing)	yellow (RAL 1018)
Housing material	Polyamide PA non-reinforced

Characteristics

Safety data

Stop category	0

Safety data: EN ISO 13849

Performance level (PL)	e (2-channel wiring)
	d (1-channel wiring)

Safety data: IEC 61508 - High-demand for 2-channel wiring

Safety Integrity Level (SIL)	3

Safety data: IEC 61508 - High-demand for 1-channel wiring

Safety Integrity Level (SIL)	2

Safety data: EN IEC 62061

Safety Integrity Level (SIL)	3 (2-channel wiring)
	2 (1-channel wiring)

Environmental and real-life conditions

Ambient conditions

Degree of protection	IP20
Min. degree of protection of inst. location	IP54
Ambient temperature (operation)	-10 °C ... 55 °C (observe derating)
Ambient temperature (storage/transport)	-20 °C ... 85 °C
Maximum altitude	≤ 2000 m (Above sea level)
Max. permissible humidity (storage/transport)	95 % (non-condensing)
Max. permissible relative humidity (operation)	95 % (non-condensing)
Shock	10g for Δt = 16 ms (continuous shock, 1000 shocks in each space direction)
Vibration (operation)	10 Hz ... 150 Hz, 2g

Approvals

CE

Identification	CE-compliant

Mounting

Mounting type	DIN rail mounting
Assembly note	Observe derating
Mounting position	vertical or horizontal

Drawings

Block diagram

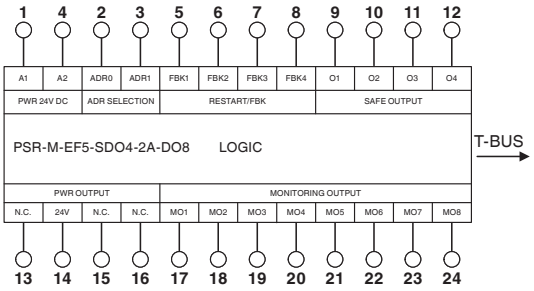

Block diagram

Application drawing

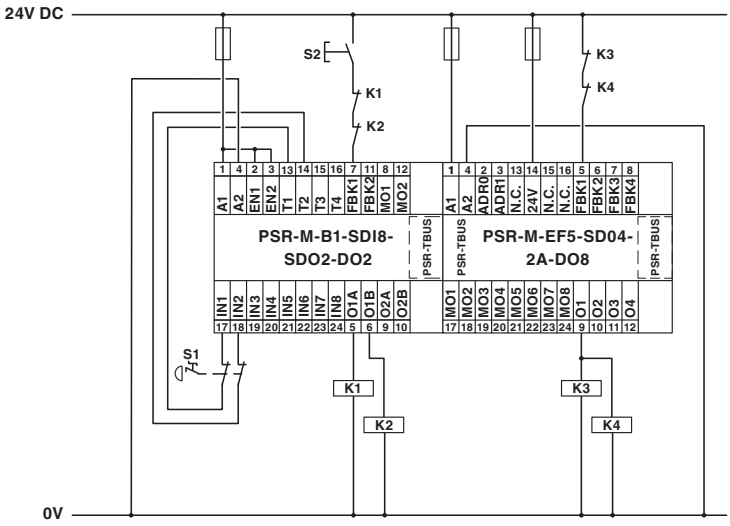

Example application

Approvals

To download certificates, visit the product detail page: https://www.phoenixcontact.com/us/products/1104977

UL Listed
Approval ID: E238705

cUL Listed
Approval ID: E238705

EAC
Approval ID: RU*-DE*B.00606/20

Functional Safety
Approval ID: Z10 029429 0013

cULus Listed

Classifications

ECLASS

ECLASS-11.0	27371819
ECLASS-13.0	27371819
ECLASS-12.0	27371819

ETIM

ETIM 9.0	EC001449

UNSPSC

UNSPSC 21.0	39122200

Environmental product compliance

EU RoHS

Fulfills EU RoHS substance requirements	Yes, No exemptions

China RoHS

Environment friendly use period (EFUP)	EFUP-E
	No hazardous substances above the limits

EU REACH SVHC

REACH candidate substance (CAS No.)	No substance above 0.1 wt%

Accessories

CP-MSTB - Coding profile

1734634

https://www.phoenixcontact.com/us/products/1734634

Coding profile, is inserted into the slot on the plug or inverted header, red insulating material



CR-MSTB - Coding section

1734401

https://www.phoenixcontact.com/us/products/1734401

Coding section, inserted into the recess in the header or the inverted plug, red insulating material



CRIMPFOX 6 - Crimping pliers

1212034

https://www.phoenixcontact.com/us/products/1212034



Crimping pliers, for ferrules without insulating collar according to DIN 46228 Part 1 and ferrules with insulating collar according to DIN 46228 Part 4, 0.25 mm^2 ... 6.0 mm^2, lateral entry, trapezoidal crimp

EBP 2- 5 - Insertion bridge

1733169

https://www.phoenixcontact.com/us/products/1733169

Insertion bridge for connectors with 5.0 mm or 5.08 mm pitch



Phoenix Contact 2024 © - all rights reserved
https://www.phoenixcontact.com

Phoenix Contact USA
586 Fulling Mill Road
Middletown, PA 17057, United States
(+717) 944-1300
info@phoenixcon.com