PSR-M-EF7-SAI4-SC - Extension module

1104985

https://www.phoenixcontact.com/us/products/1104985

Please be informed that the data shown in this PDF document is generated from our online catalog. Please find the complete data in the user documentation. Our general terms of use for downloads are valid.



Safe extension module with 4 safe analog inputs, 0 V ... 10 V; 0 mA or 4 mA ... 20 mA; TBUS interface, up to Cat. 4/PL e, SIL 3, plug-in screw terminal block, TBUS connector included

Product description

The configurable and individually scalable PSRmodular safety system is a flexible safety solution for monitoring your machine or system. The safe extension module provides the system with additional safe analog inputs.

Your advantages

- Cost-effective safety solution with a high level of adaptability to individual requirements
- Fast startup, thanks to easy hardware and software configuration
- Machine downtimes minimized with comprehensive, easy-to-understand diagnostics
- Narrow housing width of just 22.6 mm
- Up to Cat. 4/PL e in accordance with ISO 13849-1, SIL 3 in accordance with EN IEC 62061, SIL 3 in accordance with IEC 61508
- Suitable for elevator applications in accordance with EN 81-20

Commercial data

Item number	1104985
Packing unit	1 pc
Minimum order quantity	1 pc
Sales key	DN02
Product key	DNA362
GTIN	4055626971063
Weight per piece (including packing)	211.2 g
Weight per piece (excluding packing)	160 g
Customs tariff number	85371098
Country of origin	IT

Technical data

Notes

Note on application

Note on application	Only for industrial use

Product properties

Product type	Safety device
Application	Analog IN

Data management status

Article revision	01

Insulation characteristics

Protection class	III

Times

Response time	see user manual
Restart time	min. 5 s (Boot time)
	max. 10 s (Boot time)

Electrical properties

Maximum power dissipation for nominal condition	2.76 W (with max. permissible load)
Nominal operating mode	100% operating factor
Interfaces	DIN rail TBUS for connection to the master module, supplied as standard

Air clearances and creepage distances

Rated insulation voltage	250 V AC
Rated surge voltage/insulation	Basic insulation 4 kV between all current paths and housing
	Electrical isolation, 0.5 kV functional insulation between logic and analog inputs and between the analog inputs

Supply

Designation	A1/A2
Rated control circuit supply voltage U_S	19.2 V DC ... 28.8 V DC
Rated control circuit supply voltage U_S	24 V DC -20 % / +20 % (external fuse, typically 6 A)
Rated control supply current I_S	typ. 82 mA (without sensor supply)
	typ. 212 mA (with sensor supply)
Power consumption at U_S	typ. 1.96 W (without sensor supply)
	typ. 5.08 W (with sensor supply)
Inrush current	max. 14 A (Δt = 1 ms at U_s)
Filter time	typ. 5 ms (in the event of voltage dips at U_s)
Protective circuit	Serial protection against polarity reversal

Input data

General

Protective circuit	Overload protection of the current inputs; Suppressor diode

Analog

Input name	IN S1, IN S2, IN S3, IN S4
Description of the input	Safety-oriented analog inputs, configurable as current or voltage inputs, galvanically isolated
Number of inputs	4
Connection technology	2-conductor, 3-conductor or 4-conductor (2-conductor sensor signal + 2-conductor sensor supply)
Note regarding the connection technology	shielded
Scanning rate	2.5/5/10/16.6/20/50/60/100/200/400/800/1000/2000/4000 Hz
Current input signal	0 mA ... 25 mA (Measuring range)
	0 mA ... 20 mA (Configurable measuring range with diagnostics range 20.1 mA ... 23 mA)
	4 mA ... 20 mA (Configurable measuring range with diagnostics range 20.1 mA ... 23 mA (upper limit), 2.5 mA ... 3.8 mA (lower limit))
Voltage input signal	0 V ... 12 V (Measuring range)
	0 V ... 10 V (Configurable measuring range with diagnostics range 10.05 V ... 11.5 V (upper limit), 0.1 V (lower limit))
Max. permissible current	max. 35 mA (as current input)
Permissible voltage	max. 24 V (as current input)
	max. 14 V (as voltage input)
Input resistance current input	290 Ω ±25 % (incl. internal protective circuit)
Input resistance of voltage input	185 kΩ ±25 %
A/D converter resolution	16 bit
Resolution (current)	381 nA
Resolution (voltage)	152 µV
Precision	typ. ± 2 % (as current input, relative to the measuring range final value)
	max. ± 2.5 % (as current input)
	typ. ± 1 % (as voltage input, relative to the measuring range final value)
	max. ± 1.5 % (as voltage input)
Temperature coefficients	typ. ± 0.07 %/K
	max. ± 0.07 %/K
Limit frequency (3 dB)	160 Hz (RC low pass, 1st order, as current input)
	4 Hz (RC low pass, as voltage input)
Frequency	see user manual
Permissible cable length	max. 100 m (per input)
Protective circuit	Overload protection of the current inputs
	Overload protection of the voltage inputs

Output data

Sensor supply: OUT S1/0V ...OUT S4/0V

Description	Sensor supply voltage per analog input
Supply voltage	24 V DC ±3 %
Current	max. 30 mA (Sensor current recording per channel)
Short-circuit-proof	yes
Protective circuit	Overload protection Overload detection at ≥ 38 mA

Connection data

Connection technology

pluggable	yes

Conductor connection

Connection method	Screw connection
Conductor cross section rigid	0.2 mm² ... 2.5 mm²
Conductor cross section flexible	0.2 mm² ... 2.5 mm²
Conductor cross-section AWG	24 ... 12
Stripping length	7 mm
Screw thread	M3
Tightening torque	0.5 Nm ... 0.6 Nm

Signaling

Status display	4 x LED (yellow, red)
Operating voltage display	1 x green LED

Dimensions

Width	22.61 mm
Height	112.58 mm
Depth	113.6 mm

Material specifications

Color (Housing)	yellow (RAL 1018)
Housing material	Polyamide PA non-reinforced

Characteristics

Safety data

Stop category	0

Safety data: EN ISO 13849

Performance level (PL)	e (2-channel wiring)
	d (1-channel wiring)

Safety data: IEC 61508 - High-demand for 2-channel wiring

Safety Integrity Level (SIL)	3

Safety data: IEC 61508 - High-demand for 1-channel wiring

Safety Integrity Level (SIL)	2

Safety data: EN IEC 62061

Safety Integrity Level (SIL)	3 (2-channel wiring)
	2 (1-channel wiring)

Environmental and real-life conditions

Ambient conditions

Degree of protection	IP20
Min. degree of protection of inst. location	IP54
Ambient temperature (operation)	-10 °C ... 55 °C (observe derating)
Ambient temperature (storage/transport)	-20 °C ... 85 °C
Maximum altitude	≤ 2000 m (Above sea level)
Max. permissible humidity (storage/transport)	95 % (non-condensing)
Max. permissible relative humidity (operation)	95 % (non-condensing)
Shock	10g for Δt = 16 ms (continuous shock, 1000 shocks in each space direction)
Vibration (operation)	10 Hz ... 150 Hz, 2g

Approvals

CE

Identification	CE-compliant

Mounting

Mounting type	DIN rail mounting
Assembly note	Observe derating
Mounting position	vertical or horizontal

Drawings

Application drawing

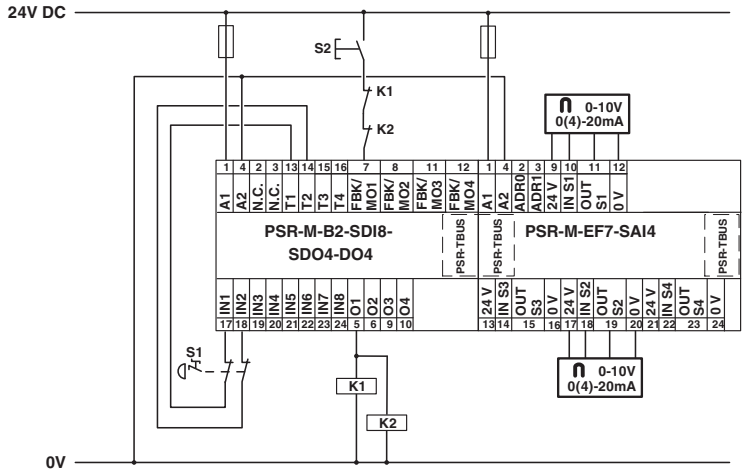

Example application

Block diagram

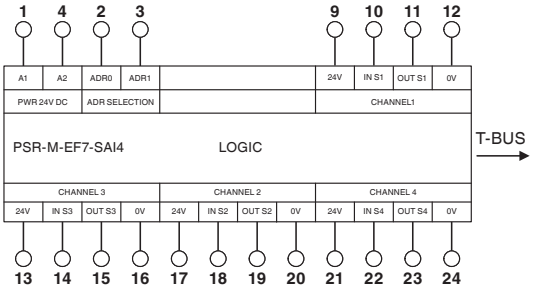

Block diagram

Approvals

To download certificates, visit the product detail page: https://www.phoenixcontact.com/us/products/1104985

EAC
Approval ID: RU*-DE*B.00606/20

Functional Safety
Approval ID: Z10 029429 0013

Classifications

ECLASS

ECLASS-11.0	27371819
ECLASS-13.0	27371819
ECLASS-12.0	27371819

ETIM

ETIM 9.0	EC001449

UNSPSC

UNSPSC 21.0	39122200

Environmental product compliance

EU RoHS

Fulfills EU RoHS substance requirements	Yes, No exemptions

China RoHS

Environment friendly use period (EFUP)	EFUP-E
	No hazardous substances above the limits

EU REACH SVHC

REACH candidate substance (CAS No.)	No substance above 0.1 wt%

Accessories

CP-MSTB - Coding profile

1734634

https://www.phoenixcontact.com/us/products/1734634

Coding profile, is inserted into the slot on the plug or inverted header, red insulating material



CR-MSTB - Coding section

1734401

https://www.phoenixcontact.com/us/products/1734401

Coding section, inserted into the recess in the header or the inverted plug, red insulating material



CRIMPFOX 6 - Crimping pliers

1212034

https://www.phoenixcontact.com/us/products/1212034



Crimping pliers, for ferrules without insulating collar according to DIN 46228 Part 1 and ferrules with insulating collar according to DIN 46228 Part 4, 0.25 mm^2 ... 6.0 mm^2, lateral entry, trapezoidal crimp

EBP 2- 5 - Insertion bridge

1733169

https://www.phoenixcontact.com/us/products/1733169

Insertion bridge for connectors with 5.0 mm or 5.08 mm pitch



Phoenix Contact 2024 © - all rights reserved
https://www.phoenixcontact.com

Phoenix Contact USA
586 Fulling Mill Road
Middletown, PA 17057, United States
(+717) 944-1300
info@phoenixcon.com