UPS-BAT/PB/24DC/20AH - Battery module

1348516

https://www.phoenixcontact.com/us/products/1348516

Please be informed that the data shown in this PDF document is generated from our online catalog. Please find the complete data in the user documentation. Our general terms of use for downloads are valid.



Battery module (device with battery), VRLA-AGM, 24 V DC, 20 Ah, automatic detection and communication with QUINT UPS-IQ

Product description

For continuous monitoring and intelligent management, there is constant communication with the QUINT UPS. Thanks to automatic detection of the battery module and tool-free switching during operation, quick installation is possible. The battery modules for QUINT UPS with IQ Technology are fully charged before being sent to our warehouse.

Your advantages

- Maximum buffer times
- Consists of 2 x 12 V battery modules and an electronic monitoring unit
- Lead AGM (Absorbent Glass Mat) technology

Commercial data

Item number	1348516
Packing unit	1 pc
Minimum order quantity	1 pc
Sales key	CM24
Product key	CMUEV3
GTIN	4063151665951
Weight per piece (including packing)	13,400 g
Weight per piece (excluding packing)	13,200 g
Customs tariff number	85072080
Country of origin	CN

Technical data

Notes

General

Note on the battery	This product contains a battery with a limited shelf life that must be charged every few months. The product packaging indicates when the battery must be started up or recharged. The general shelf life can be found in the energy storage devices area under “Latest startup”.

Energy storage

Input

Input voltage	24 V DC (SELV)
Nominal capacity	20 Ah
Charging current	6 A
End-of-charge voltage	27.6 V (20 °C)

Output

Output voltage	24 V DC
Output current I_{max}	45 A
Output fuse	2x 25 A
Buffer time	82 min (10 A)
	22 min (30 A)

General

Connection in parallel	yes
	max. 5
Connection in series	no
Battery type	BB Battery BP 20-12FR
Battery technology	VRLA-AGM
IQ-Technology	yes
Latest startup date (battery only)	12 Months (0 °C ... 20 °C)
Latest startup (battery only) - range	9 Months ... 12 Months (20 °C ... 30 °C)
	6 Months ... 9 Months (30 °C ... 40 °C)
Accumulator module service life (according to Eurobat)	8 (20 °C)
Storage medium	VRLA-AGM
Size designation	Block
Battery pack	yes
Suitable for fast charging	yes
Temperature sensor	yes
Number of replacement battery kits	1x (UPS-BAT-KIT/PB/2X12V/20AH (1185595))

Connection data

Conductor connection

Connection method	Push-in connection
rigid	10 mm² ... 16 mm² (recommended)
	0.75 mm² ... 16 mm²
flexible	10 mm² ... 16 mm² (recommended)
	0.75 mm² ... 16 mm²
AWG	8 ... 4 (recommended)
	20 ... 4
Stripping length	18 mm

Conductor connection

Connection method	Push-in connection
rigid	0.75 mm² ... 16 mm² (LIN)
flexible	0.75 mm² ... 16 mm² (LIN)
AWG	20 ... 4
Stripping length	18 mm

Product properties

Product type	Battery module
Product family	Battery module (device with battery)
Application	for QUINT4 DC-UPS, QUINT4 AC-UPS, QUINT-UPS, and TRIO-UPS-2G
Disposal	Used batteries must not be thrown away with household waste, they should instead be disposed of in accordance with applicable national regulations.

Insulation characteristics

Protection class	III
Degree of pollution	2

Dimensions

Item dimensions

Width	155 mm
Height	168 mm
Depth	183 mm

Drill hole

Diameter	5 mm

Installation dimensions

Installation distance right/left	0 mm / 0 mm
Installation distance top/bottom	50 mm / 50 mm

Mounting

Mounting position	Horizontally, on a mounting panel

Material specifications

Housing material	Plastic

Cable/line

Battery connecting cable: A+/-

Cable cross section	6 mm²
Cable length	265 mm
Color	red/black

Battery connecting cable: B+/-

Cable cross section	6 mm²
Cable length	265 mm
Color	red/black

Environmental and real-life conditions

Ambient conditions

Degree of protection	IP20
Ambient temperature (storage/transport)	-20 °C ... 40 °C
Ambient temperature (charge)	0 °C ... 40 °C
Ambient temperature (discharge)	-20 °C ... 50 °C
Max. permissible relative humidity (operation)	≤ 95 %

Ex data

Suited for EX-applications	no

Drawings

Block diagram

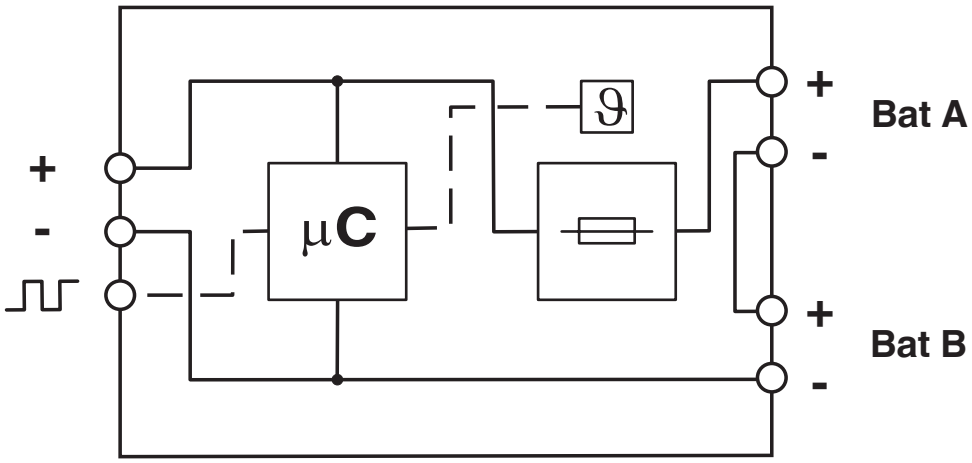

Block diagram

Graphic

Load Current	Buffertime																			
	Minutes						Hours													
	30	35	40	45	50	55	1	2	3	4	5	6	7	8	9	10	12	14	16	18	20
1 A																					
2 A																					
3 A																					
5 A																					
7 A																					
10 A																					
15 A																					
20 A																					

The data is based on an ambient temperature of +25 °C at the start of use.

1348516 UPS-BAT/PB/24DC/20AH **1354641** UPS-BAT/PB/24DC/40AH

Lead battery buffer times for TRIO DC UPS

Graphic

Load Current	Buffertime																														
	Minutes															Hours																
	1	2	3	4	5	6	7	8	9	10	20	30	40	45	50	1	2	3	4	5	6	7	8	9	10	12	14	16	18	20	50	100
1 A																															2x	
2 A																														2x		
3 A																												2x	2x	2x		
5 A																								2x	2x	2x	2x	2x				
7 A																				2x	2x	2x	2x	2x	2x							
10 A																			2x	2x	2x	2x	2x									
15 A																	2x	2x	2x													
20 A																	2x	2x														
25 A																	2x															
30 A																2x																
35 A														2x	2x	2x																
40 A													2x	2x	2x	2x																

2x: In this case, two battery modules of the same capacity are required. The data is based on an ambient temperature of +25 °C at the start of use.

1274520 UPS-BAT/PB/24DC/1.2AH
1274119 UPS-BAT/PB/24DC/12AH
1474660 UPS-BAT/PB/24DC/110AH
1274117 UPS-BAT/PB/24DC/4AH
1348516 UPS-BAT/PB/24DC/20AH
1274118 UPS-BAT/PB/24DC/7AH
1354641 UPS-BAT/PB/24DC/40AH

Lead battery buffer times for QUINT DC UPS

Graphic

Load Current	Buffertime																														
	Minutes															Hours																
	1	2	3	4	5	8	10	15	20	25	30	40	50	1	1.5	2	3	4	6	9	10	15	20	24	40						
100 W	2x	2x	2x	2x	2x	2x	2x	2x	2x	2x	2x	2x	2x	2x	2x	2x	2x	2x	2x	2x	2x	2x	2x	2x	2x						
200 W	2x	2x	2x	2x	2x	2x	2x	2x	2x	2x	2x	2x	2x	2x	2x	2x	2x	2x	2x	2x	2x	2x	2x								
300 W	2x	2x	2x	2x	2x	2x	2x	2x	2x	2x	2x	2x	2x	2x	2x	2x	2x	2x	2x	2x	2x	2x									
400 W	2x	2x	2x	2x	2x	2x	2x	2x	2x	2x	2x	2x	2x	2x	2x	2x	2x	2x	2x	2x	2x	2x									
500 W	2x	2x	2x	2x	2x	2x	2x	2x	2x	2x	2x	2x	2x	2x	2x	2x	2x	2x	2x	2x											
600 W	2x	2x	2x	2x	2x	2x	2x	2x	2x	2x	2x	2x	2x	2x	2x	2x	2x	2x	2x	2x											
700 W	2x	2x	2x	2x	2x	2x	2x	2x	2x	2x	2x	2x	2x	2x	2x	2x	2x	2x	2x	2x											
800 W	2x	2x	2x	2x	2x	2x	2x	2x	2x	2x	2x	2x	2x	2x	2x	2x	2x	2x	2x	2x											
900 W	2x	2x	2x	2x	2x	2x	2x	2x	2x	2x	2x	2x	2x	2x	2x	2x	2x	2x	2x	2x											

2x: There are always two battery modules of the same capacity are required . The data is based on an ambient temperature of +25 °C at the start of use.

1274117 UPS-BAT/PB/24DC/4AH
1274119 UPS-BAT/PB/24DC/12AH
1354641 UPS-BAT/PB/24DC/40AH
1274118 UPS-BAT/PB/24DC/7AH
1348516 UPS-BAT/PB/24DC/20AH
1474660 UPS-BAT/PB/24DC/110AH

Buffer times for QUINT AC UPS 1 kVA

Graphic

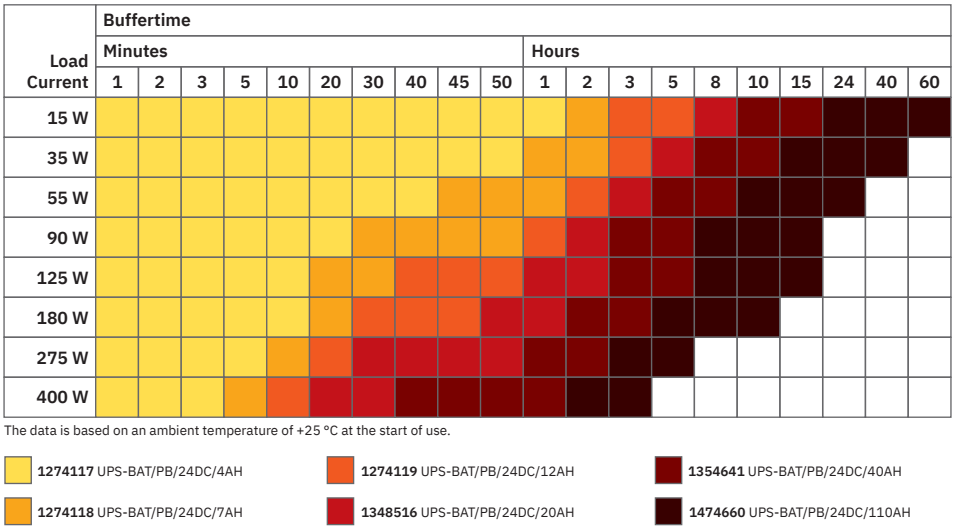

The data is based on an ambient temperature of +25 °C at the start of use.

1274117 UPS-BAT/PB/24DC/4AH

1274118 UPS-BAT/PB/24DC/7AH

1274119 UPS-BAT/PB/24DC/12AH

1348516 UPS-BAT/PB/24DC/20AH

1354641 UPS-BAT/PB/24DC/40AH

1474660 UPS-BAT/PB/24DC/110AH

Lead battery buffer times for QUINT AC UPS 500 VA

Approvals

To download certificates, visit the product detail page: https://www.phoenixcontact.com/us/products/1348516

LR
Approval ID: LR22136091TA

BV
Approval ID: 41516/B0 BV

ABS
Approval ID: 22-2244289-PDA

cULus Listed
Approval ID: E123528-20220210

DNV
Approval ID: TAA0000265

	Nominal voltage U_N	Nominal current I_N	Cross section AWG	Cross section mm^2
	500 V	41 A	-	- 6

IECEE CB Scheme
Approval ID: DK-124876-M1-UL

cULus Listed
Approval ID: FILE E 199827

Classifications

ECLASS

ECLASS-11.0	27050403
ECLASS-12.0	27050403
ECLASS-13.0	27050403

ETIM

ETIM 9.0	EC000357

UNSPSC

UNSPSC 21.0	26111700

Environmental product compliance

EU RoHS

Fulfills EU RoHS substance requirements	Yes
Exemption	7(a), 7(c)-I

China RoHS

Environment friendly use period (EFUP)	EFUP-8
	An article-related China RoHS declaration table can be found in the download area for the respective article under "Manufacturer declaration". For all articles with EFUP-E, no China RoHS declaration table issued and required.

EU REACH SVHC

REACH candidate substance (CAS No.)	Lead(CAS: 7439-92-1)
SCIP	ca7bc164-a319-4ba0-ba8d-b16e10c0faa3

EF3.0 Climate Change

CO2e kg	44.22 kg CO2e

Phoenix Contact 2024 © - all rights reserved
https://www.phoenixcontact.com

Phoenix Contact USA
586 Fulling Mill Road
Middletown, PA 17057, United States
(+717) 944-1300
info@phoenixcon.com