SAC-4P-M12MS/5,0-PVC B-L - Sensor/actuator cable

1431500

https://www.phoenixcontact.com/us/products/1431500

Please be informed that the data shown in this PDF document is generated from our online catalog. Please find the complete data in the user documentation. Our general terms of use for downloads are valid.



Sensor/actuator cable, 4-position, PVC, black RAL 9005, Plug straight M12, coding: A, on free cable end, cable length: 5 m

Your advantages

- Easy and safe: 100 % electrically tested plug-in components

Commercial data

Item number	1431500
Packing unit	1 pc
Note	Made to order (non-returnable)
Sales key	BF03
Product key	BF1CCA
GTIN	4046356506182
Weight per piece (including packing)	213.8 g
Weight per piece (excluding packing)	204.5 g
Customs tariff number	85444290
Country of origin	CN

Technical data

Product properties

Product type	Sensor/actuator cable
Application	Standard
Number of positions	4
No. of cable outlets	1
Shielded	no
Coding	A

Insulation characteristics

Overvoltage category	II
Degree of pollution	3

Material specifications

Flammability rating according to UL 94	HB
Material of grip body	TPU, hardly inflammable, self-extinguishing
Contact material	CuSn
Contact surface material	Ni/Au
Contact carrier material	TPU GF
Material for screw connection	Zinc die-cast, nickel-plated

Electrical properties

Insulation resistance	≥ 100 MΩ
Nominal voltage U_N	250 V
Nominal current I_N	4 A

Mechanical properties

Mechanical data

Insertion/withdrawal cycles	≥ 100

Signaling

Status display	no
Status display present	No

Connection data

Conductor connection

Tightening torque	0.4 Nm (M12 connector)

Connector

Connection 1

Type	Plug straight M12
Number of positions	4

Coding type	A

Connection 2

Type	free cable end

Cable/line

Cable length	5 m

PVC black [PVC]

Dimensional drawing	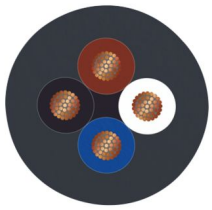
Cable weight	40 kg/km
UL AWM Style	2464 / 1729 (80°C/300 V)
Number of positions	4
Shielded	no
Cable type	PVC black [PVC]
Conductor structure signal line	42x 0.10 mm
AWG signal line	22
Conductor cross section	4x 0.34 mm² (Signal line)
Wire diameter incl. insulation	1.45 mm ±0.02 mm
External cable diameter	5.20 mm ±0.15 mm
Outer sheath, material	PVC
External sheath, color	black RAL 9005
Conductor material	Bare Cu litz wires
Material wire insulation	PVC
Single wire, color	brown, white, blue, black
Thickness, insulation	≥ 0.23 mm (Core insulation)
Thickness, outer sheath	≥ 0.76 mm
Overall twist	4 wires, twisted
Max. conductor resistance	max. 58 Ω/km (at 20 °C)
Insulation resistance	≥ 200 MΩ*km (at 20 °C)
Nominal voltage, cable	≤ 300 V
Test voltage	≥ 3000 V
Minimum bending radius, fixed installation	5 x D
Minimum bending radius, flexible installation	10 x D
Smallest bending radius, fixed installation	26 mm
Smallest bending radius, movable installation	52 mm
Flame resistance	according to UL 758/1581 FT1
	According to UL 758/1581 (Cable Flame)

	According to DIN EN 60332-1-2
Resistance to oil	according to DIN EN 60811-2-1, 168 h at 60 °C
Ambient temperature (operation)	-40 °C ... 80 °C (cable, fixed installation)
	-25 °C ... 80 °C (Cable, flexible installation)

Environmental and real-life conditions

Ambient conditions

Degree of protection	IP65
	IP67
	IP68
Ambient temperature (operation)	-25 °C ... 90 °C (Plug / socket)
	-40 °C ... 80 °C (cable, fixed installation)
	-25 °C ... 80 °C (Cable, flexible installation)

Standards and regulations

Standard designation	M12 connector
Standards/specifications	IEC 61076-2-101

Drawings

Circuit diagram

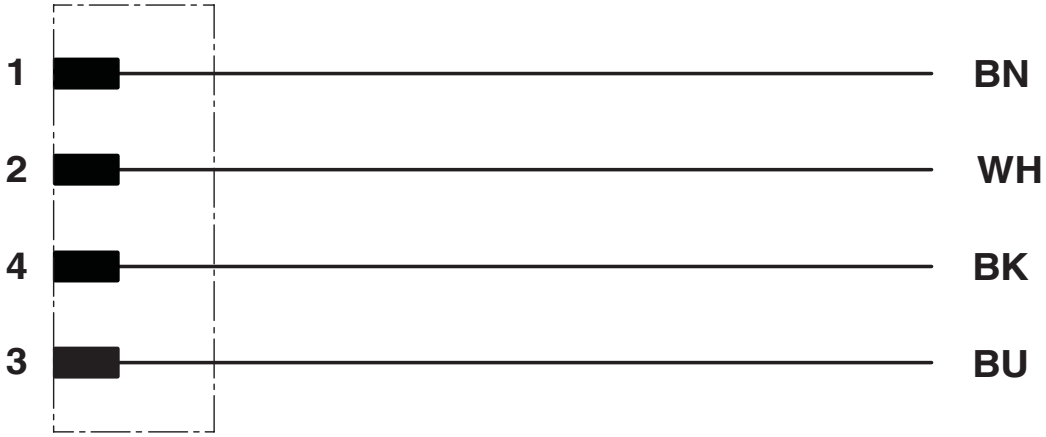

Dimensional drawing

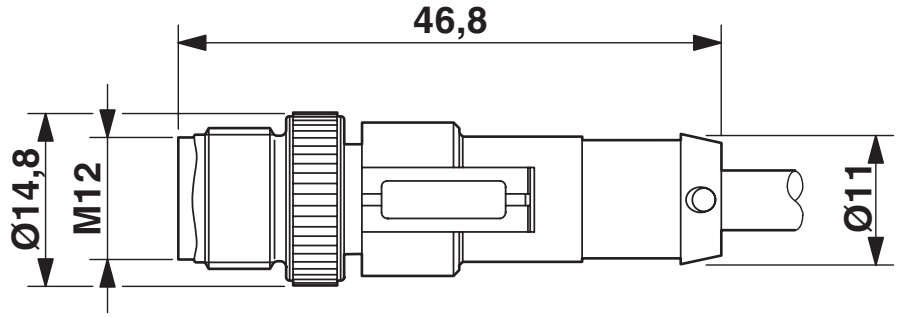

Plug, M12 x 1, straight, shielded

Schematic diagram

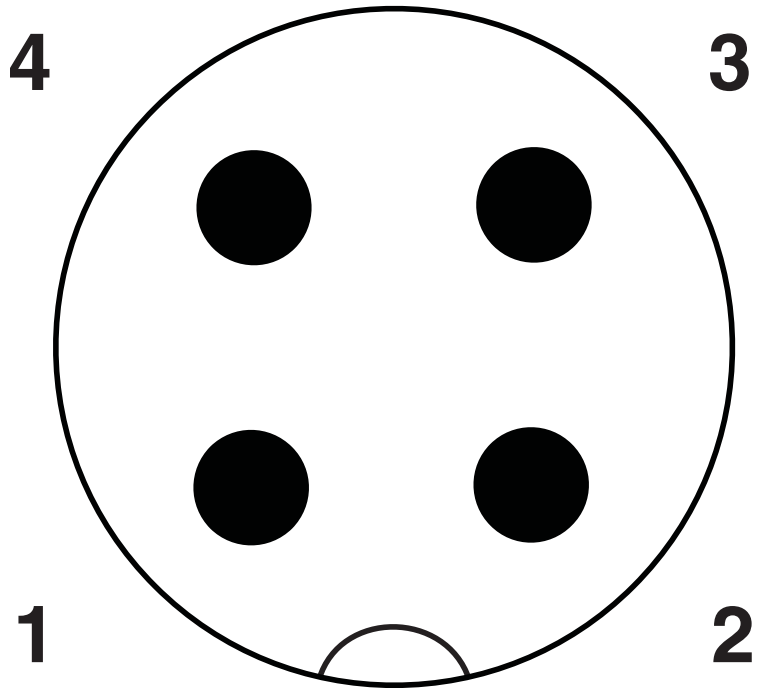

Pin assignment M12 plug, 4-pos., A-coded, view plug side

Classifications

ECLASS

ECLASS-11.0	27060311
ECLASS-13.0	27060311

Phoenix Contact 2024 © - all rights reserved
https://www.phoenixcontact.com

Phoenix Contact USA
586 Fulling Mill Road
Middletown, PA 17057, United States
(+717) 944-1300
info@phoenixcon.com