HC-B 16-SMQ-84/O2PG29 - Housing

1460187

https://www.phoenixcontact.com/us/products/1460187

Please be informed that the data shown in this PDF document is generated from our online catalog. Please find the complete data in the user documentation. Our general terms of use for downloads are valid.



HEAVYCON B16 box mounting base, with double locking latch, height: 84 mm, with 2 x Pg29 glands

Commercial data

Item number	1460187
Packing unit	10 pc
Minimum order quantity	1 pc
Product key	AF7AAC
GTIN	4046356696678
Weight per piece (including packing)	22.22 g
Weight per piece (excluding packing)	22.22 g
Country of origin	DE

Technical data

Notes

General	For contact inserts HC-B16, BB32, BBB40, D40, DD72, HS6, M, K

Product properties

Product type	Housing with locking latch
Housing type	Surface mounting housing
Application	Standard
Type	B16
No. of cable outlets	2
Type of the screw connection	2x Pg29
Shielded	no
Cable outlet	lateral
Pg screw connection	none

Dimensions

Dimensional drawing	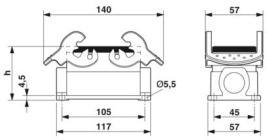
Width	57 mm
Height	84 mm
Length	117 mm

Material specifications

Seal material	NBR
Housing material	Die-cast aluminum
Housing surface material	Powder-coated, gray
Locking latch material	Stainless steel, handle: PA

Mechanical properties

Mechanical data

Type of the screw connection	2x Pg29
Locking type	Latch

Environmental and real-life conditions

Ambient conditions

Degree of protection	IP65
Ambient temperature (operation)	-40 °C ... 125 °C

Drawings

Dimensional drawing

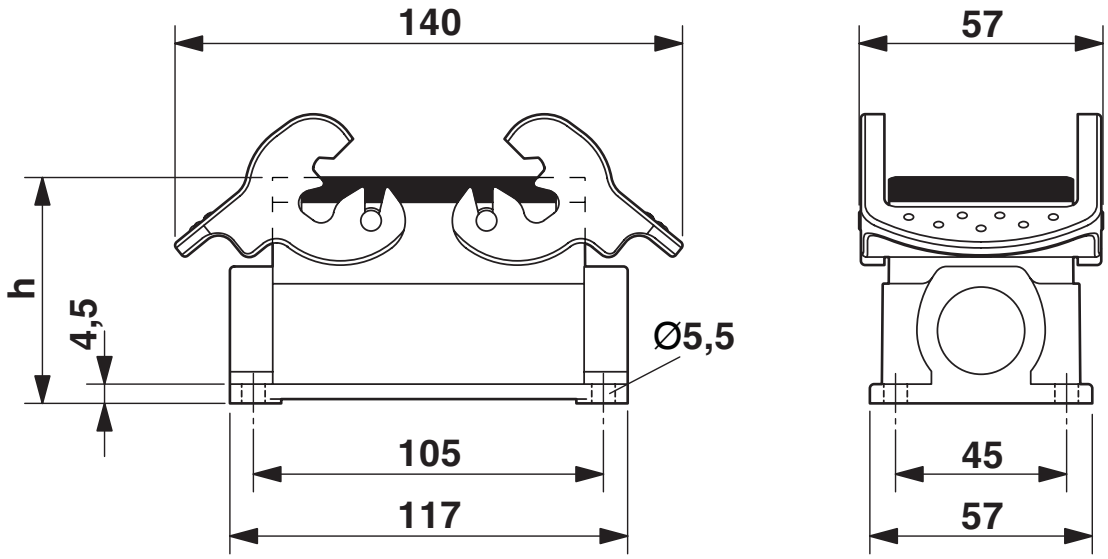

Classifications

ECLASS

ECLASS-11.0	27440202
ECLASS-13.0	27440202

Environmental product compliance

EU RoHS

Fulfills EU RoHS substance requirements	Yes, No exemptions

EU REACH SVHC

REACH candidate substance (CAS No.)	No substance above 0.1 wt%

Phoenix Contact 2025 © - all rights reserved
https://www.phoenixcontact.com

Phoenix Contact USA
586 Fulling Mill Road
Middletown, PA 17057, United States
(+717) 944-1300
info@phoenixcon.com