SAC-5P-MS/ 5,0-920/FS SCO - Bus system cable

1518290

https://www.phoenixcontact.com/us/products/1518290

Please be informed that the data shown in this PDF document is generated from our online catalog. Please find the complete data in the user documentation. Our general terms of use for downloads are valid.



Bus system cable, CANopen®, DeviceNet™, 5-position, PUR halogen-free, red lilac RAL 4001, shielded, Plug straight M12 SPEEDCON, coding: A, on Socket straight M12 SPEEDCON, coding: A, cable length: 5 m

Commercial data

Item number	1518290
Packing unit	1 pc
Minimum order quantity	1 pc
Sales key	BF04
Product key	BF1CKD
Catalog page	Page 433 (C-2-2017)
GTIN	4017918968410
Weight per piece (including packing)	322.5 g
Weight per piece (excluding packing)	322.5 g
Customs tariff number	85444290
Country of origin	PL

Technical data

Product properties

Product type	Data cable preassembled
Application	Standard
Sensor type	CANopen®
Number of positions	5
No. of cable outlets	1
Shielded	yes
Coding	A

Data management status

Article revision	07

Insulation characteristics

Overvoltage category	II
Degree of pollution	3

Interfaces

Bus system	CANopen®/DeviceNet™
Signal type/category	CANopen®
	DeviceNet™

Signaling

Status display	no
Status display present	No

Electrical properties

Insulation resistance	≥ 100 MΩ
Nominal voltage U_N	48 V AC
	60 V DC
Nominal current I_N	4 A
Transmission medium	Copper

Material specifications

Flammability rating according to UL 94	HB
Seal material	NBR
Material of grip body	TPU, hardly inflammable, self-extinguishing
Contact material	CuSn
Contact surface material	Ni/Au
Contact carrier material	TPU GF
Material for screw connection	Zinc die-cast, nickel-plated

Connection data

Pin assignment

Contact | Color (signal designation) | Contact (optional)	1 (Plug) | SR (shield) | 1 (Socket)
	2 (Plug) | RD (V+) | 2 (Socket)
	3 (Plug) | BK (V-) | 3 (Socket)
	4 (Plug) | WH (CAN_H) | 4 (Socket)
	5 (Plug) | BU (CAN_L) | 5 (Socket)

Connector

Connection 1

Type	Plug straight M12 SPEEDCON
Number of positions	5
Locking type	SPEEDCON
Coding type	A (Standard)
Ambient temperature (operation)	-25 °C ... 90 °C

Connection 2

Type	Socket straight M12 SPEEDCON
Number of positions	5
Locking type	SPEEDCON
Coding type	A (Standard)
Ambient temperature (operation)	-25 °C ... 90 °C

Cable/line

Cable length	5 m

CANopen®/DeviceNet™, PUR, violet [920]

Dimensional drawing	
Cable weight	90 kg/km
UL AWM Style	21198 (80°C/300 V)
Number of positions	4
Shielded	yes
Cable type	CANopen®/DeviceNet™, PUR, violet [920]
Conductor structure	2xAWG24/19+2xAWG22/19
Conductor structure signal line	19x 0.13 mm
AWG signal line	24
Conductor cross section	2x 0.25 mm² (Data cable)
	2x 0.34 mm² (Power supply)

	1x 0.34 mm² (Drain wire)
Wire diameter incl. insulation	1.95 mm ±0.05 mm (Data cable)
	1.4 mm ±0.05 mm (Power supply)
External cable diameter	6.70 mm ±0.3 mm
Outer sheath, material	PUR
External sheath, color	red lilac RAL 4001
Conductor material	Tin-plated Cu litz wires
Material wire insulation	Foamed PE (Data cable)
	PE (Power supply)
Single wire, color	red-black, blue-white
Twisted pairs	2 cores to the pair
Type of pair shielding	Plastic-coated aluminum foil, aluminum side outside
Overall twist	2 pairs around a drain wire in the center to the core
Optical shield covering	80 %
Insulation resistance	≥ 5 GΩ*km (Data cable)
	≥ 5 GΩ*km (Power supply)
Loop resistance	≤ 181.80 Ω/km (Data cable)
	≤ 114.80 Ω/km (Power supply)
Wave impedance	120 Ω ±10 % (with 1 MHz)
Cable capacity	nom. 40 nF/km (Data cable)
Nominal voltage, cable	≤ 300 V (Peak value, not for high-power applications)
Test voltage Core/Core	2000 V (50 Hz, 1 min.)
Test voltage Core/Shield	2000.00 V (50 Hz, 1 min.)
Minimum bending radius, fixed installation	5 x D
Minimum bending radius, flexible installation	10 x D
Smallest bending radius, fixed installation	34 mm
Smallest bending radius, movable installation	67 mm
Max. bending cycles	5000000
Minimum bending radius, drag chain applications	10 x D
Bending radius	70 mm
Traversing path	4.5 m
Traversing rate	3 m/s
Acceleration	3 m/s²
Shield attenuation	≤ 22.9 dB/km (with 1 MHz)
	≤ 16.4 dB/km (At 500 kHz)
	≤ 9.5 dB/km (At 125 kHz)
Halogen-free	in accordance with DIN VDE 0472 part 815
	according to IEC 60754-1
Flame resistance	IEC 60332-1-2
	in accordance with ISO 6722-1 5.22 (UN ECE-R 118.01)
Other resistance	Low adhesion
Ambient temperature (operation)	-40 °C ... 80 °C (cable, fixed installation)
	-30 °C ... 70 °C (Cable, flexible installation)
	-20 °C ... 60 °C (for installation)

	-20 °C ... 60 °C (cable, drag chain applications)

Environmental and real-life conditions

Ambient conditions

Degree of protection	IP65
	IP67

Drawings

Dimensional drawing

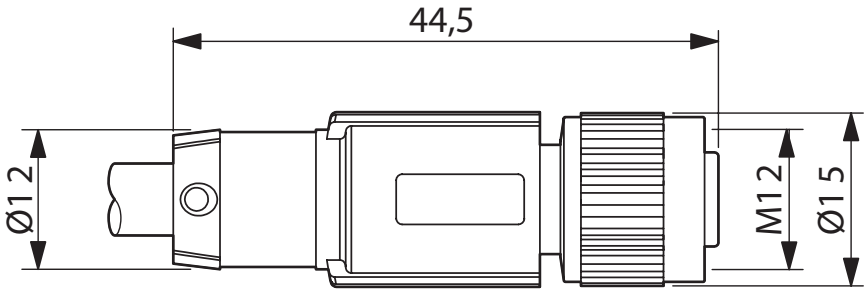

M12 x 1 socket, straight, shielded

Circuit diagram

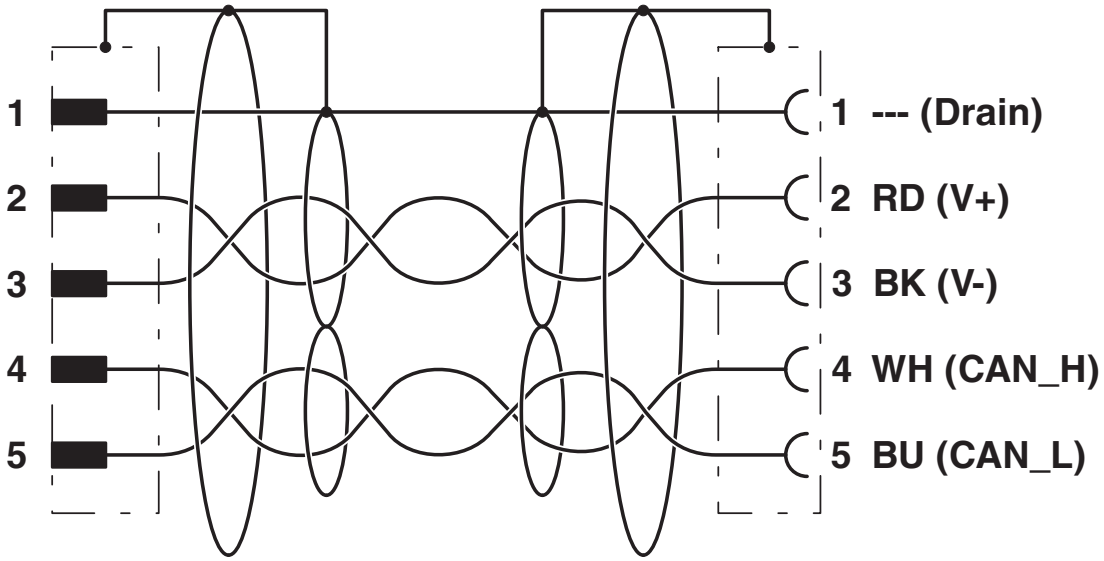

Schematic diagram

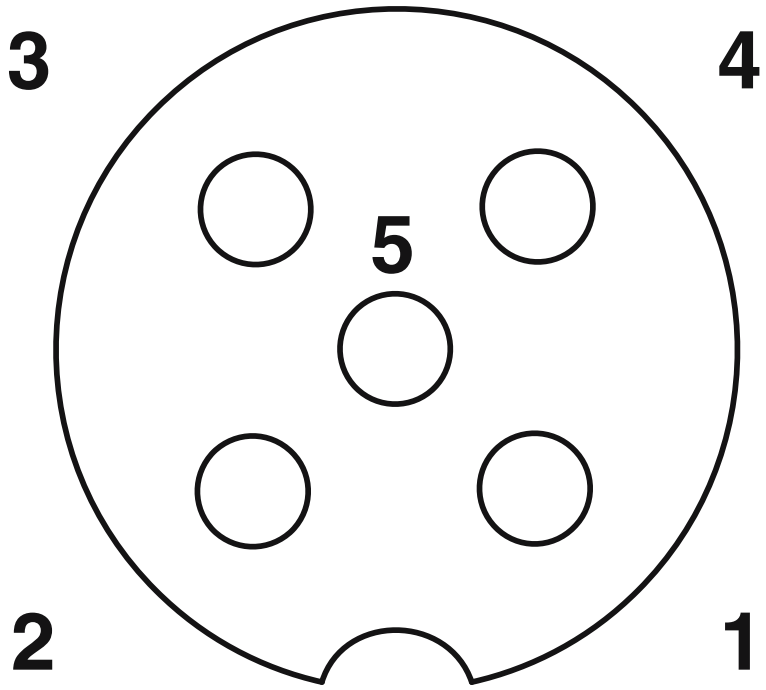

Pin assignment M12 socket, 5-pos., A-coded, socket side view

Schematic diagram

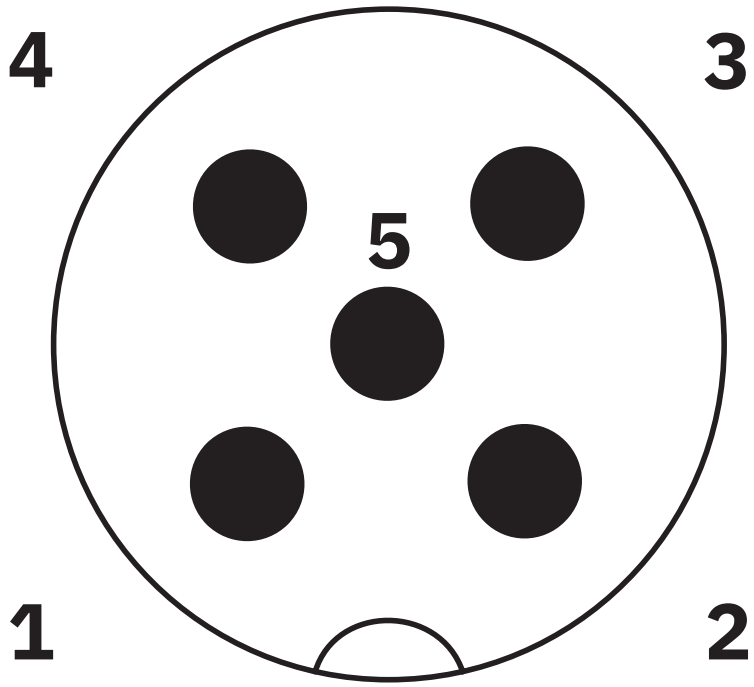

Pin assignment M12 male connector, 5-pos., A-coded, male side

Dimensional drawing

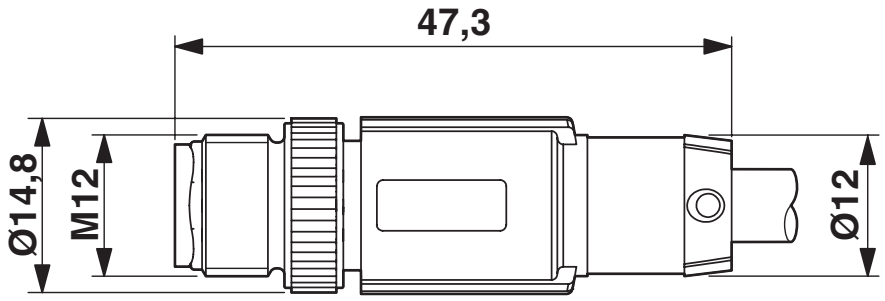

Plug, M12 x 1, straight, shielded

Approvals

To download certificates, visit the product detail page: https://www.phoenixcontact.com/us/products/1518290

UL Listed
Approval ID: FILE E 221474

	Nominal voltage U_N	Nominal current I_N	Cross section AWG	Cross section mm^2
	125 V	4 A	-	-

cUL Listed
Approval ID: FILE E 221474

	Nominal voltage U_N	Nominal current I_N	Cross section AWG	Cross section mm^2
	125 V	4 A	-	-

EAC-RoHS
Approval ID: RU D-DE.HB35.B.00387

cULus Listed

Classifications

ECLASS

ECLASS-11.0	27060307
ECLASS-12.0	27060307
ECLASS-13.0	27060307

ETIM

ETIM 9.0	EC001855

UNSPSC

UNSPSC 21.0	26121600

Environmental product compliance

EU RoHS

Fulfills EU RoHS substance requirements	Yes, No exemptions

China RoHS

Environment friendly use period (EFUP)	EFUP-E
	No hazardous substances above the limits

EU REACH SVHC

REACH candidate substance (CAS No.)	No substance above 0.1 wt%

Phoenix Contact 2024 © - all rights reserved
https://www.phoenixcontact.com

Phoenix Contact USA
586 Fulling Mill Road
Middletown, PA 17057, United States
(+717) 944-1300
info@phoenixcon.com